Product data sheet

Specifications

Complete body contact assembly, Harmony XB4, single contact, with fixing collar, metal, 2 NC, compact push in terminals

ZB4BZ1045

Product availability: Non-Stock - Not normally stocked in distribution facility

Main

Range of Product	Harmony XB4
Product or Component Type	Complete body/contact assembly
Device short name	ZB4
Fixing collar material	Zamak
Sale per indivisible quantity	1
Head type	Standard
Contacts type and composition	2 NC
Contact operation	Slow-break
Contact block type	Single
Device Composition	Fixing collar Body
Connections - terminals	Push-in, <= 2 x 1.5 mm² with wire end ferrule IEC 60947-1 Push-in, >= 1 x 0.34 mm² without wire end ferrule IEC 60947-1

Complementary

CAD overall width	1.8 in (46.2 mm)
CAD overall height	1.09 in (27.6 mm)
CAD overall depth	1.2 in (30 mm)
Terminals description ISO n°1	(11-12)NC
Net Weight	0.106 lb(US) (0.048 kg)
Contacts usage	Standard contacts
Positive opening	With IEC 60947-5-1 appendix K
Operating travel	0.048 in (1.217 mm) NC changing electrical state) 0.2 in (4.3 mm) total travel)
Operating force	4.5 N NC changing electrical state
Mechanical durability	10000000 cycles
Contacts material	Silver alloy (Ag/Ni)
Short-circuit protection	10 A cartridge fuse gG IEC 60947-5-1
[Ith] conventional free air thermal current	10 A IEC 60947-5-1
[Ui] rated insulation voltage	300 V 3)IEC 60947-1
[Uimp] rated impulse withstand voltage	4 kV IEC 60947-1

Price is “List Price” and may be subject to a trade discount – check with your local distributor or retailer for actual price.

Disclaimer: This documentation is not intended as a substitute for and is not to be used for determining suitability or reliability of these products for specific user applications

[Ie] rated operational current	6 A 120 V, AC-15, A300 IEC 60947-5-1 3 A 240 V, AC-15, A300 IEC 60947-5-1 0.55 A 125 V, DC-13, Q300 IEC 60947-5-1 0.27 A 250 V, DC-13, Q300 IEC 60947-5-1
Device presentation	Basic sub-assemblies

Environment

Protective treatment	TH
Ambient Air Temperature for Storage	-40…158 °F (-40…70 °C)
Ambient Air Temperature for Operation	-40…158 °F (-40…70 °C)
IP degree of protection	IP20 IEC 60529
Standards	IEC 60947-1 IEC 60947-5-1 IEC 60947-5-4 IEC 60947-5-5 UL 60947-1 UL 60947-5-1 UL 60947-5-5 UL 1059 UL 486E CSA C22.2 No 60947-1 CSA C22.2 No 60947-5-1 CSA C22.2 No 158 CSA C22.2 No 65 IACS E10
Product Certifications	EAC IECEE CB Scheme CCC UL CSA
Vibration resistance	5 gn (f= 10…500 Hz) conforming to IEC 60068-2-6 25 mm peak to peak (f= 2…10 Hz) conforming to IEC 60068-2-6
Shock resistance	25 gn 6 ms) 1000 shocks on each axis IEC 60068-2-27 30 gn 18 ms) half sine wave acceleration IEC 60068-2-27 50 gn 11 ms) half sine wave acceleration IEC 60068-2-27

Ordering and shipping details

Category	US10CS222469
Discount Schedule	0CS2
GTIN	3389119037716
Returnability	Yes
Country of origin	FR

Packing Units

Unit Type of Package 1	PCE
Nbr. of units in pkg.	1
Package 1 Height	1.260 in (3.200 cm)
Package 1 Width	1.496 in (3.800 cm)
Package 1 Length	1.811 in (4.600 cm)
Package weight(Lbs)	2.152 oz (61.000 g)
Unit Type of Package 2	S03
Number of Units in Package 2	200
Package 2 Height	11.811 in (30.000 cm)

Package 2 Width	11.811 in (30.000 cm)
Package 2 Length	15.748 in (40.000 cm)
Package 2 Weight	28.025 lb(US) (12.712 kg)

Contractual warranty

Warranty (in months)	18

Environmental Data

Schneider Electric aims to achieve Net Zero status by 2050 through supply chain partnerships, lower impact materials, and circularity via our ongoing “Use Better, Use Longer, Use Again” campaign to extend product lifetimes and recyclability.

Environmental Data explained >

How we assess product sustainability >

Environmental footprint

Carbon footprint (kg CO2 eq, Total Life cycle)	1
Environmental Disclosure	Product Environmental Profile

Use Better

Materials and Substances

Packaging made with recycled cardboard	Yes
Packaging without single use plastic	Yes
EU RoHS Directive	Pro-active compliance (Product out of EU RoHS legal scope)
REACh Regulation	REACh Declaration
California proposition 65	WARNING: This product can expose you to chemicals including: Di-isodecyl phthalate (DIDP), which is known to the State of California to cause birth defects or other reproductive harm. For more information go to www.P65Warnings.ca.gov

Use Longer

Lifetime extension

Repair	No

Use Again

Repack and remanufacture

Circularity Profile	End of Life Information
Take-back	No
WEEE Label	The product must be disposed on European Union markets following specific waste collection and never end up in rubbish bins.

Dimensions Drawings

Dimensions

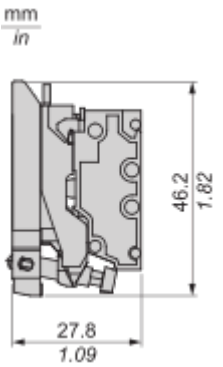

Mounting and Clearance

Mounting

Mounting and Unmounting

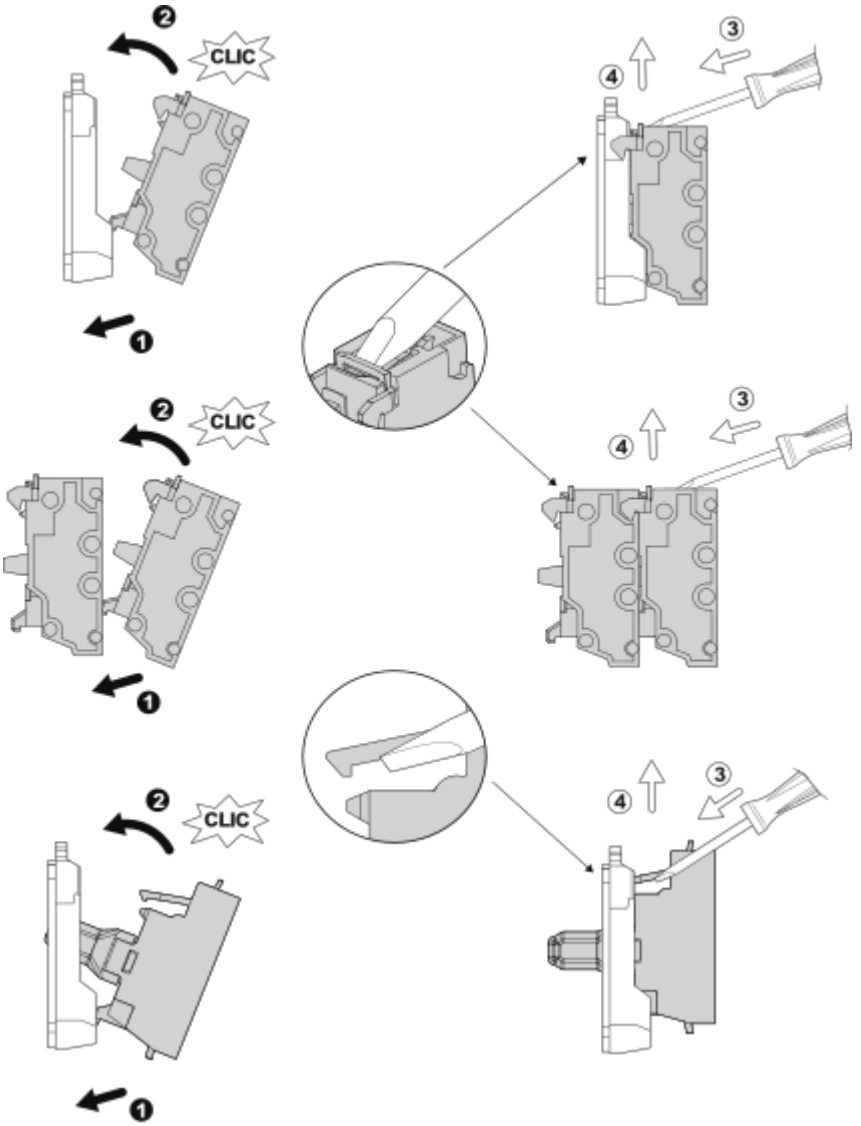

Panel cut-out Dimension

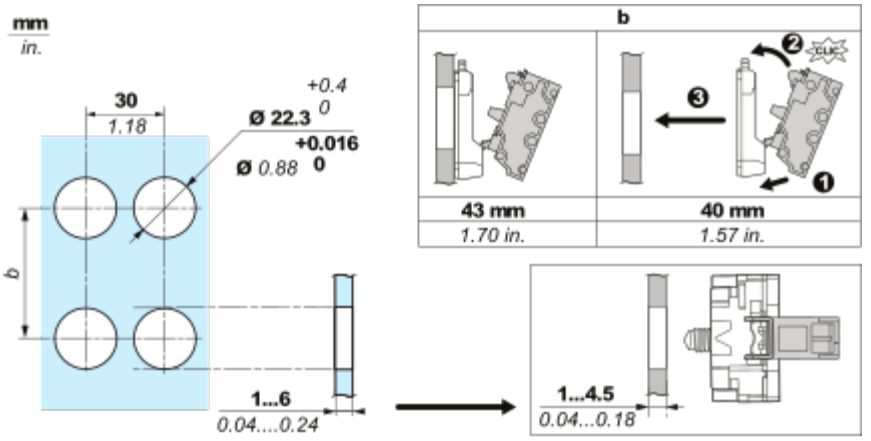
mm
in.
30
1.18
Ø 22.3 +0.4 0
Ø 0.88 +0.016 0
b
1...6
0.04....0.24
b
43 mm
1.70 in.
40 mm
1.57 in.
1...4.5
0.04...0.18

Connections and Schema

Wiring

Wiring and Unwiring

mm in.	8 0.32
mm² AWG	0.34...1.5 22...16

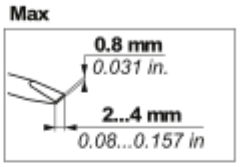

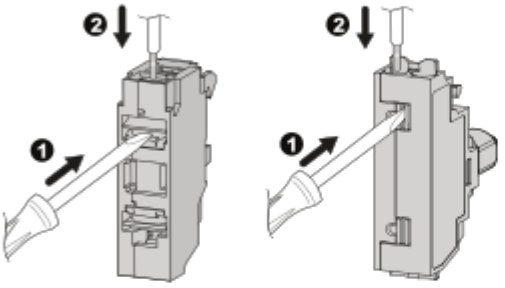

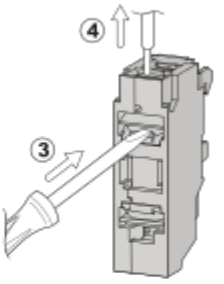

mm in.	8 0.32	8 0.32 (1)		8 0.32 (1)
mm² AWG	0.34...1.5 22...16	0.34...1 22...18	0.34...1.5 22...16	0.34...1.5 22...16

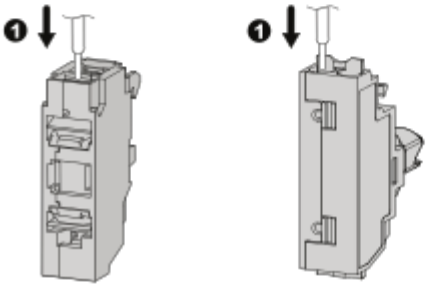

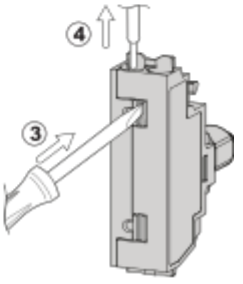

Technical Illustration

Dimensions

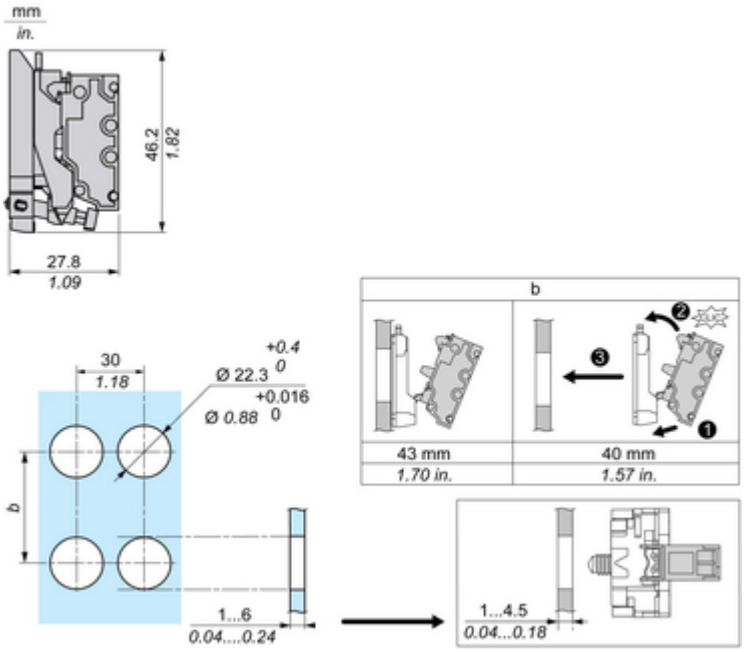

Technical Illustration

Wiring diagram

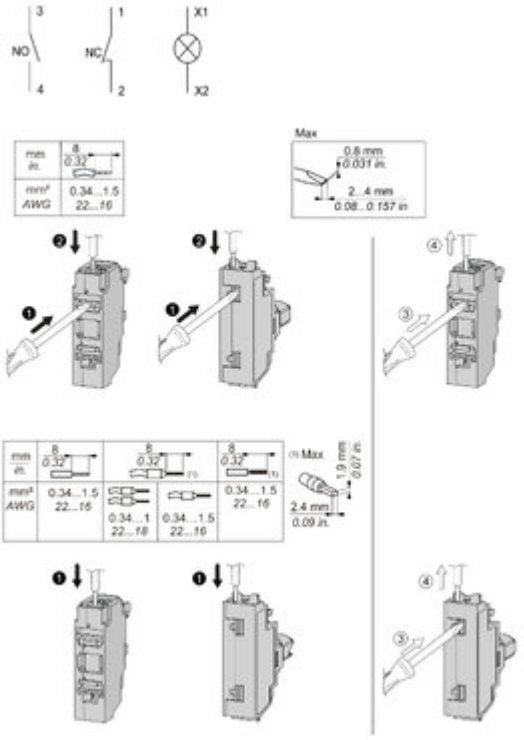

Offer Marketing Illustration

Product benefits / Features

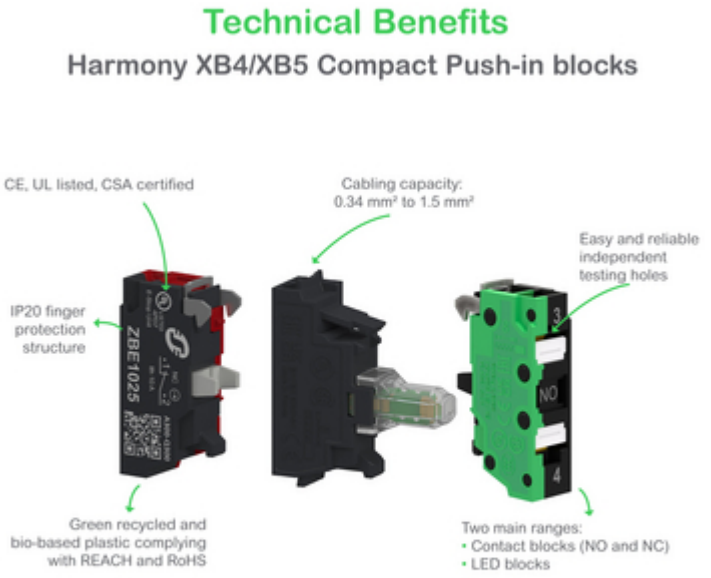

Offer Marketing Illustration

Product benefits / Features

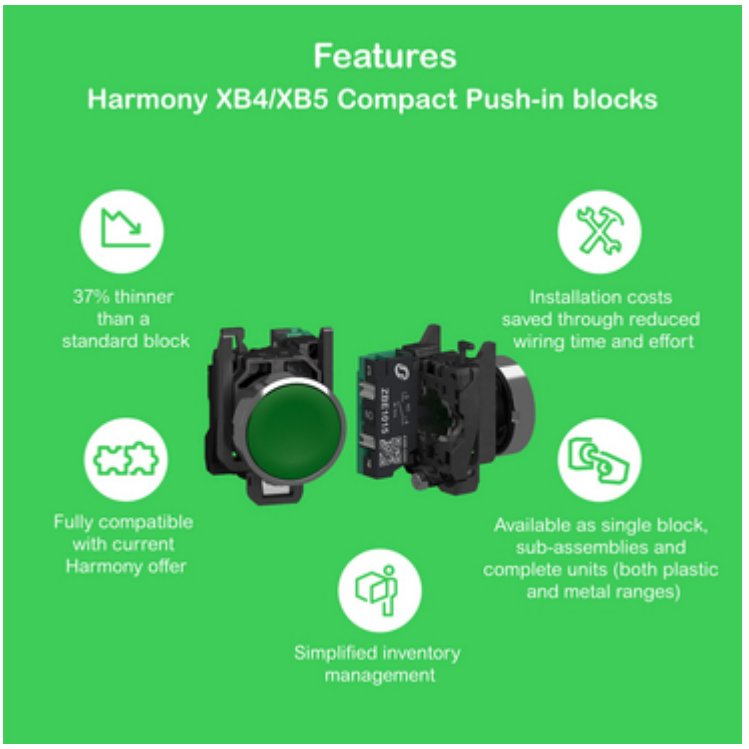

Offer Marketing Illustration

Product benefits / Features

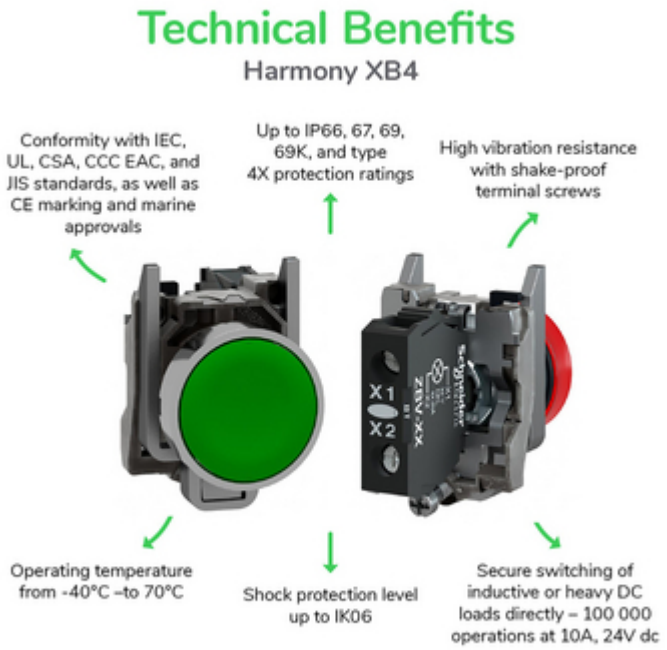

Offer Marketing Illustration

Product benefits / Features

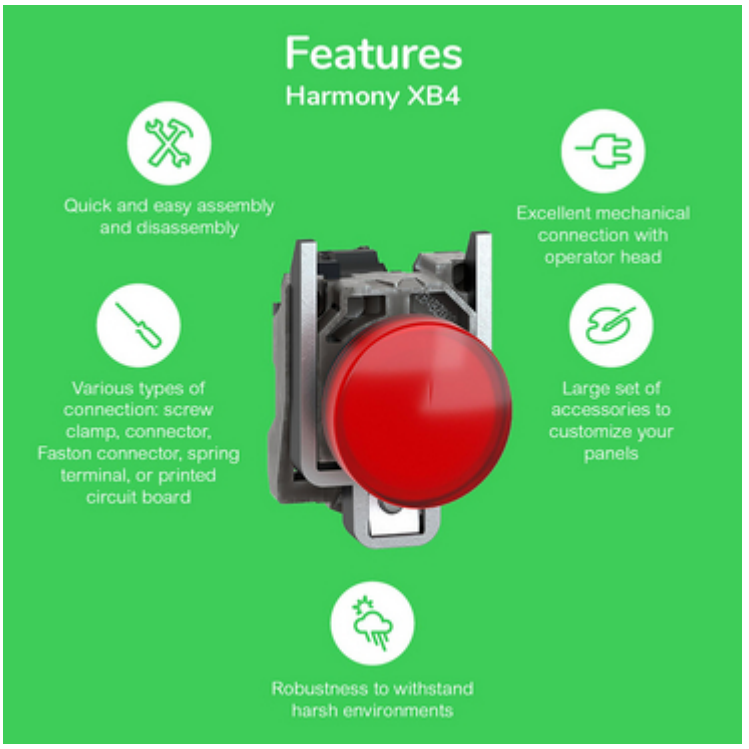

Image of product / Alternate images

Alternative

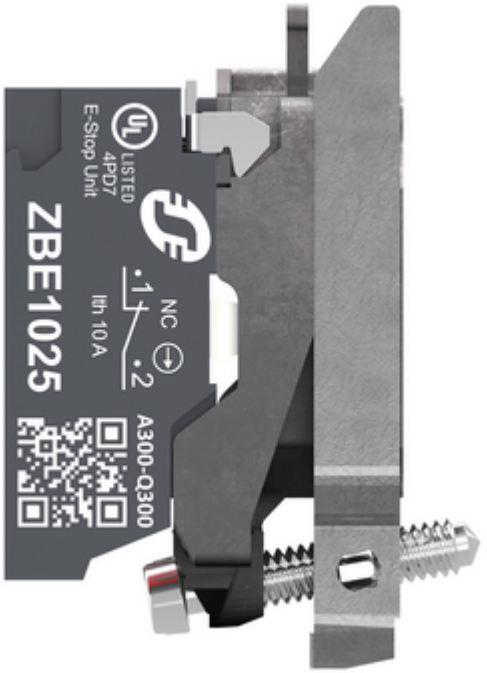

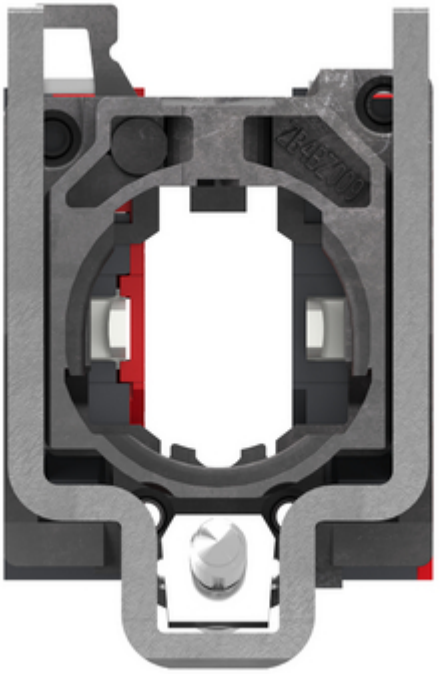

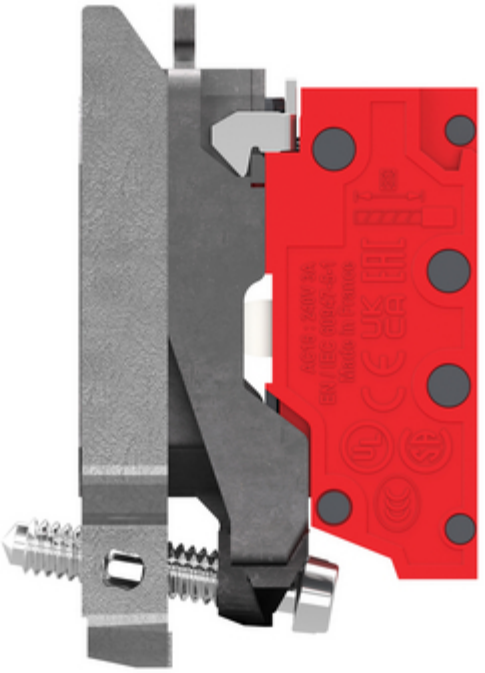

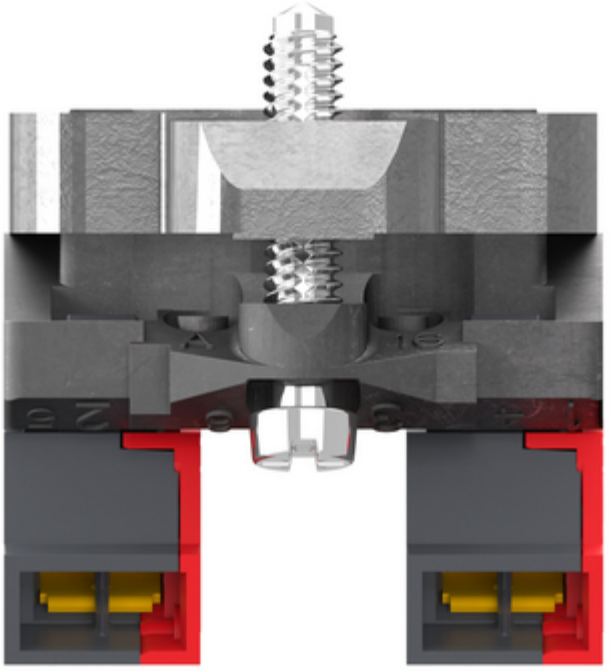

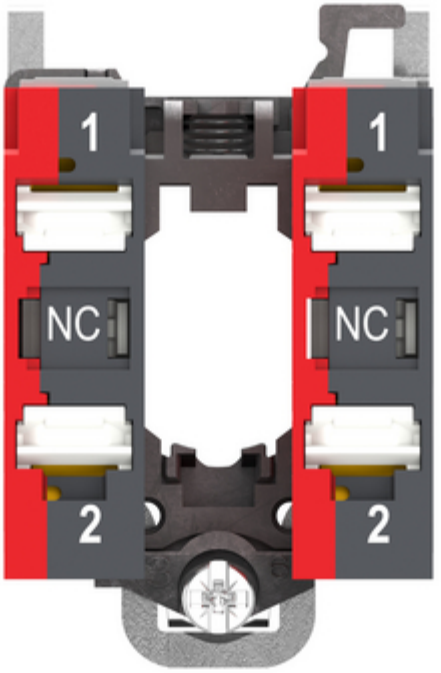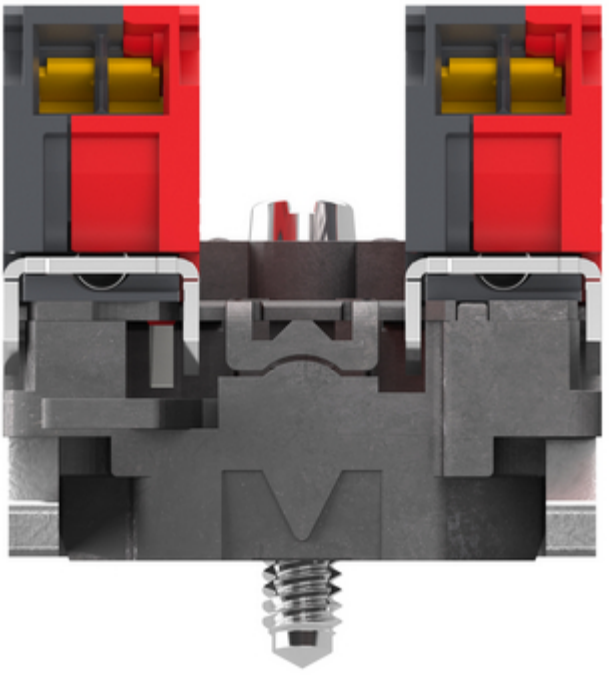
1
1
NC
NC
2
2