Product data sheet

Specifications

contactor body withou coil, TeSys F, 3P(3NO), AC-1 <=440V 1260A with coil LX1/ LX9, 110â€¦600V AC 40/400Hz, LX4, 48â€¦250V DC

LC1F1250

Product availability: Non-Stock - Not normally stocked in distribution facility

Main

Range	TeSys
Product name	TeSys F
Product or Component Type	Contactor
Device short name	LC1F
Contactor application	Resistive load
Utilisation category	AC-1
Poles description	3P
power pole contact composition	3 NO
[Ue] rated operational voltage	<= 690 V AC 50/60 Hz
[Ie] rated operational current	1260 A 104 °F (40 °C)) <= 440 V AC-1

Complementary

[Uc] control circuit voltage	110...600 V AC 40...400 Hz with LX1/LX9 coil 28...250 V DC with LX4 coil
[Uimp] rated impulse withstand voltage	8 kV
Overvoltage category	III
[Ith] conventional free air thermal current	1260 A (at 104 °F (40 °C))
Irms rated making capacity	1890 A conforming to IEC 60947-4-1
Rated breaking capacity	1890 A conforming to IEC 60947-4-1
[Icw] rated short-time withstand current	3000 A 104 °F (40 °C) - 3 min 5200 A 104 °F (40 °C) - 30 s 4000 A 104 °F (40 °C) - 1 min 2000 A 104 °F (40 °C) - 10 min 8000 A 104 °F (40 °C) - 10 s
Associated fuse rating	1400 A gG at <= 440 V for power circuit
Average impedance	0.12 mOhm - Ith 1260 A 50 Hz
[Ui] rated insulation voltage	1000 V IEC 60947-4-1 1500 V VDE 0110 group C
Power dissipation per pole	120 W AC-1
Control circuit voltage limits	Operational: 0.85...1.1 Uc AC 40...400 Hz with LX1/LX9 coil Drop-out: 0.25...0.5 Uc AC 40...400 Hz with LX1/LX9 coil Operational: 0.85...1.1 Uc DC with LX4 coil Drop-out: 0.2...0.35 Uc DC with LX4 coil
Heat dissipation	20 W

Price is “List Price” and may be subject to a trade discount – check with your local distributor or retailer for actual price.

Disclaimer: This documentation is not intended as a substitute for and is not to be used for determining suitability or reliability of these products for specific user applications

Operating time	40...80 ms closing with LX1/LX9 coil 100...200 ms opening with LX1/LX9 coil 60...70 ms closing with LX4 coil 40...50 ms opening with LX4 coil
Mounting Support	Plate
Standards	IEC 60947-1 EN 60947-1 JIS C8201-4-1 EN 60947-4-1 IEC 60947-4-1
Product Certifications	CB UL CSA CQC CE UKCA CCC
Connections - terminals	Power circuit bar 2 Power circuit bolted connection Control circuit screw clamp terminals 1 0.002…0.006 in² (1…4 mm²)flexible without cable end Control circuit screw clamp terminals 2 0.002…0.006 in² (1…4 mm²)flexible with cable end Control circuit screw clamp terminals 1 0.002…0.006 in² (1…4 mm²)flexible with cable end Control circuit screw clamp terminals 2 0.002…0.004 in² (1…2.5 mm²)solid without cable end Control circuit screw clamp terminals 1 0.002…0.006 in² (1…4 mm²) Control circuit screw clamp terminals 2 0.002…0.006 in² (1…4 mm²)
Tightening torque	Power circuit 513.3 lbf.in (58 N.m) Control circuit 10.6 lbf.in (1.2 N.m)
Mechanical durability	1 Mcycles
Inrush power in VA	1500…1730 VA, 40...400 Hz cos phi 0.9 (at 68 °F (20 °C))with LX1/LX9 coil 1420…1920 VA (at 68 °F (20 °C))with LX4 coil
Hold-in power consumption in VA	20…25 VA, 40...400 Hz cos phi 0.9 (at 68 °F (20 °C))with LX1/LX9 coil 6.5…12.5 VA (at 68 °F (20 °C))with LX4 coil
Maximum operating rate	1200 cyc/h 131 °F (55 °C)

Environment

Protective treatment	TH
Ambient Air Temperature for Operation	23…104 °F (-5…40 °C)
Ambient Air Temperature for Storage	-76…176 °F (-60…80 °C)
Permissible ambient air temperature around the device	-40…140 °F (-40…60 °C)
Operating altitude	9842.52 ft (3000 m) without derating
Mechanical robustness	Vibrations contactor open2 Gn, 5...300 Hz Vibrations contactor closed4 Gn, 5...300 Hz Shocks contactor open6 Gn for 1/2 sine wave (11 ms) Shocks contactor closed15 Gn for 1/2 sine wave (11 ms)
Height	13.3 in (338 mm)
Width	12.2 in (309 mm)
Depth	10.04 in (255 mm)
Net Weight	41.9 lb(US) (19 kg)

Ordering and shipping details

Category	US10I1222336

Discount Schedule	0I12
GTIN	3606485242538
Returnability	No
Country of origin	CZ

Packing Units

Unit Type of Package 1	PCE
Nbr. of units in pkg.	1
Package 1 Height	13.0 in (33.0 cm)
Package 1 Width	14.6 in (37.0 cm)
Package 1 Length	17.3 in (44.0 cm)
Package weight(Lbs)	44.3 lb(US) (20.1 kg)

Contractual warranty

Warranty (in months)	18

Environmental Data

Schneider Electric aims to achieve Net Zero status by 2050 through supply chain partnerships, lower impact materials, and circularity via our ongoing “Use Better, Use Longer, Use Again” campaign to extend product lifetimes and recyclability.

Environmental Data explained

How we assess product sustainability

Environmental footprint

Carbon footprint (kg CO2 eq, Total Life cycle)	12476
Environmental Disclosure	Product Environmental Profile

Use Better

Materials and Substances

Packaging made with recycled cardboard	Yes
Packaging without single use plastic	No, we have minimized the use of plastic in the packaging in compliance with regulations and considering quality and safety standards
EU RoHS Directive	Compliant with Exemptions
SCIP Number	F040462c-f312-4a6d-9d16-164be5751a29
REACh Regulation	REACh Declaration
California proposition 65	WARNING: This product can expose you to chemicals including: Lead and lead compounds, which is known to the State of California to cause cancer and birth defects or other reproductive harm. For more information go to www.P65Warnings.ca.gov

Use Longer

Lifetime extension

Repair	No

Use Again

Repack and remanufacture

Circularity Profile	End of Life Information
Take-back	No
WEEE Label	The product must be disposed on European Union markets following specific waste collection and never end up in rubbish bins.

Technical Illustration
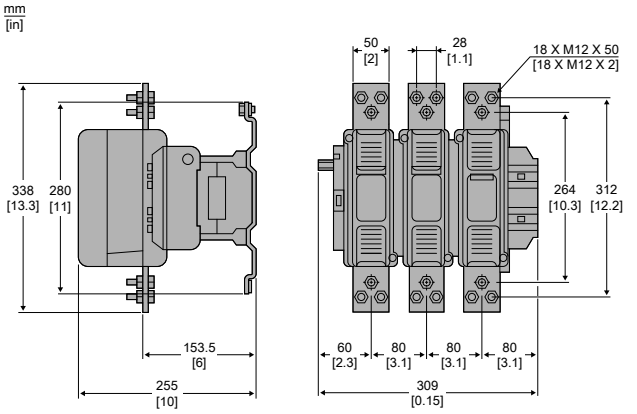
Assembly's dimensions