Product data sheet

Specifications

Illuminated marked legend ring, Harmony XB5, 60mm, plastic, yellow, red fixed integral LED, marked PARADA DE EMERGENCIA, 24V AC DC

ZBY9W2B430

Product availability: Non-Stock - Not normally stocked in distribution facility

Main

Range of Product	Harmony
Product or Component Type	Illuminated marked legend ring
Sale per indivisible quantity	1
Shape of signaling unit head	Round
Cap/operator or lens colour	Red
Operator additional information	With illuminated ring
Light source	Protected LED
Bulb base	Integral LED
Light source colour	Red
[Us] rated supply voltage	24 V AC/DC 50/60 Hz
Device presentation	Intermediate ring

Complementary

Accessory / separate part destination	Emergency stop mushroom head push-button
Material	Plastic
Marking	Black PARADA DE EMERGENCIA yellow
Label dimensions	Ø 60 mm
User Language	Italian
Height	2.4 in (60 mm)
Width	0.4 in (9.3 mm)
Net Weight	0.035 lb(US) (0.016 kg)
Electrical insulation class	Class II IEC 61140
Resistance to high pressure washer	1015.3 psi (7000000 Pa) 131 °F (55 °C) 0.1 m
[Ui] rated insulation voltage	24 V 3)IEC 60947-1
Signalling type	Steady
Supply voltage limits	19.2…30 V DC 21.6…26.4 V AC
Current Consumption	18 mA
Service life	100000 h at rated voltage and 25 °C

Price is “List Price” and may be subject to a trade discount – check with your local distributor or retailer for actual price.

Disclaimer: This documentation is not intended as a substitute for and is not to be used for determining suitability or reliability of these products for specific user applications

Surge withstand	1 kV IEC 61000-4-5
Compatibility code	XB4 XB5

Environment

Protective treatment	TH
Ambient Air Temperature for Storage	-40…158 °F (-40…70 °C)
Ambient air temperature for operation	-40…158 °F (-40…70 °C)
IP degree of protection	IP66 IEC 60529 IP67 IEC 60529 IP69 IEC 60529 IP69K ISO 20653 Type 13 UL 50E Type 12 UL 50E Type 4 UL 50E Type 4X UL 50E
IK degree of protection	IK05 conforming to IEC 62262
Standards	CSA C22.2 No 14 IEC 60947-5-1 IEC 60947-5-4 UL 508 IEC 60947-1 JIS C8201-5-1 JIS C8201-1
Product Certifications	UL Listed CSA
Vibration resistance	5 gn (f= 10…500 Hz) conforming to IEC 60068-2-6 25 mm peak to peak (f= 2…10 Hz) conforming to IEC 60068-2-6
Shock resistance	30 gn 18 ms) half sine wave acceleration IEC 60068-2-27 50 gn 11 ms) half sine wave acceleration IEC 60068-2-27 25 gn 6 ms) 1000 shocks on each axis IEC 60068-2-27
Resistance to fast transients	2 kV IEC 61000-4-4
Resistance to electromagnetic fields	9.1 V/m (10 V/m) IEC 61000-4-3
Resistance to electrostatic discharge	4 kV on contact (on metal parts) IEC 61000-4-2 8 kV in free air (in insulating parts) IEC 61000-4-2
Electromagnetic emission	Class B IEC 55011

Ordering and shipping details

Category	US10CS222467
Discount Schedule	0CS2
GTIN	3606489745172
Returnability	Yes
Country of origin	ID

Packing Units

Unit Type of Package 1	PCE
Nbr. of units in pkg.	1
Package 1 Height	0.787 in (2.000 cm)
Package 1 Width	2.953 in (7.500 cm)
Package 1 Length	3.150 in (8.000 cm)

Package weight(Lbs)	0.705 oz (20.000 g)
Unit Type of Package 2	S01
Number of Units in Package 2	50
Package 2 Height	5.906 in (15.000 cm)
Package 2 Width	5.906 in (15.000 cm)
Package 2 Length	15.748 in (40.000 cm)
Package 2 Weight	2.866 lb(US) (1.300 kg)

Contractual warranty

Warranty	18 months

Environmental Data

Schneider Electric aims to achieve Net Zero status by 2050 through supply chain partnerships, lower impact materials, and circularity via our ongoing “Use Better, Use Longer, Use Again” campaign to extend product lifetimes and recyclability.

Environmental Data explained >

How we assess product sustainability >

Environmental footprint

Carbon footprint (kg CO2 eq, Total Life cycle)	13
Environmental Disclosure	Product Environmental Profile

Use Better

Materials and Substances

Packaging made with recycled cardboard	No
Packaging without single use plastic	No
EU RoHS Directive	Pro-active compliance (Product out of EU RoHS legal scope)
SCIP Number	6b64d229-f954-4ab6-8e15-fee7e09c36cb
REACh Regulation	REACh Declaration
California proposition 65	WARNING: This product can expose you to chemicals including: Lead and lead compounds, which is known to the State of California to cause cancer and birth defects or other reproductive harm. For more information go to www.P65Warnings.ca.gov

Use Again

Repack and remanufacture

Recyclability potential, in %	3
Circularity Profile	No need of specific recycling operations
Take-back	No

Dimensions Drawings

Dimensions

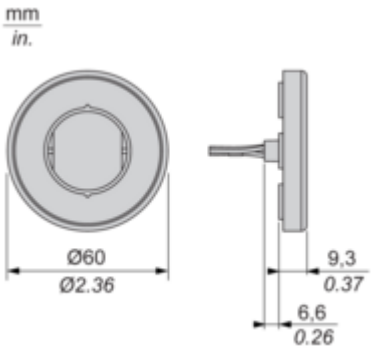

Mounting and Clearance

Mounting and Clearance

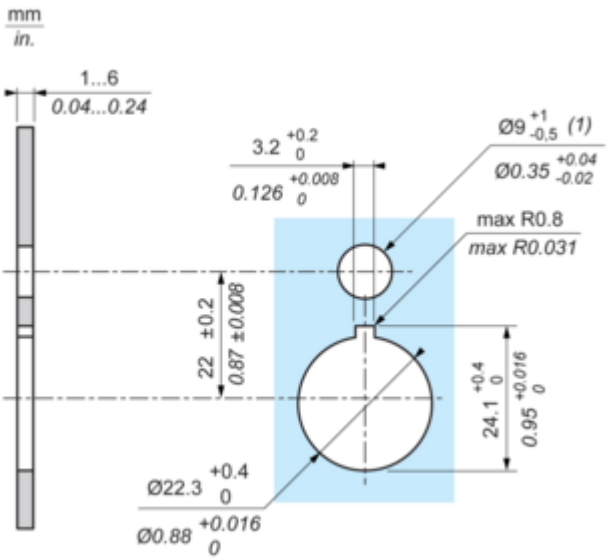

(1) : For IP X9 applications, the max recommendation dimension of hole is Ø9 mm/Ø0.35 in.

Connections and Schema

Wiring Diagram

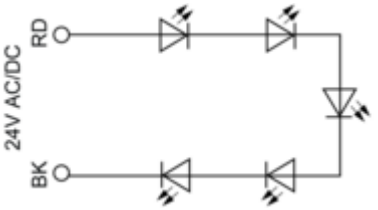

RD : Red
BK : Black

Technical Illustration

Dimensions

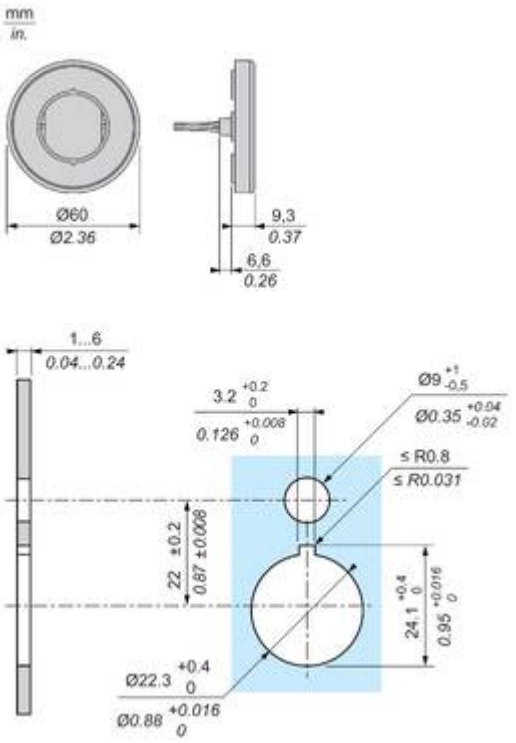

Offer Marketing Illustration

Product benefits / Features

Offer Marketing Illustration

Product benefits / Features

Image of product / Alternate images

Alternative

PARADA DE
EMERGENCIA