Product data sheet

Specifications

Head for key selector switch, Harmony XB5, flush mounted 455 3 pos return right to center

ZB5FG05

Product availability: Non-Stock - Not normally stocked in distribution facility

Main

Range of Product	Harmony XB5
Product or Component Type	Head for key selector switch
Device short name	ZB5
Bezel material	Dark grey plastic
Mounting diameter	1.2 in (30.5 mm)
Head type	Built-in-flush
Sale per indivisible quantity	1
Shape of signaling unit head	Round
Type of operator	Right to centre spring return
Operator profile	Black key switch
Operator position information	3 positions +/- 45°
Type of Keylock	Key 455
Key withdrawal position	Left and center

Complementary

CAD overall width	1.5 in (37 mm)
CAD overall height	1.5 in (37 mm)
CAD overall depth	2.8 in (72 mm)
Net Weight	0.152 lb(US) (0.069 kg)
Mechanical durability	1000000 cycles
Electrical composition code	C4 6 single and double front mounting C5 5 single front mounting C6 5 single and double front mounting C7 4 single front mounting C8 4 single and double front mounting C11 3 single front mounting C3 6 single front mounting SF1 3 single front mounting

Environment

Protective treatment	TH
Ambient Air Temperature for Storage	-40…158 °F (-40…70 °C)
Ambient air temperature for operation	-40…158 °F (-40…70 °C)
Overvoltage category	Class II conforming to IEC 60536

Price is “List Price” and may be subject to a trade discount – check with your local distributor or retailer for actual price.

Disclaimer: This documentation is not intended as a substitute for and is not to be used for determining suitability or reliability of these products for specific user applications

IP degree of protection	IP66 IEC 60529 IP67 IP69 IP69K
NEMA degree of protection	NEMA 13 NEMA 4X
Resistance to high pressure washer	1015.3 psi (7000000 Pa) 131 °F (55 °C) 0.1 m
IK degree of protection	IK03 conforming to IEC 50102
Standards	IEC 60947-1 JIS C8201-5-1 IEC 60947-5-4 CSA C22.2 No 14 IEC 60947-5-1 UL 508 JIS C8201-1
Product Certifications	CSA DNV BV LROS (Lloyds register of shipping) UL Listed
Vibration resistance	5 gn (f= 2…500 Hz) conforming to IEC 60068-2-6
Shock resistance	30 gn 18 ms) half sine wave acceleration IEC 60068-2-27 50 gn 11 ms) half sine wave acceleration IEC 60068-2-27

Ordering and shipping details

Category	US10CS222467
Discount Schedule	0CS2
GTIN	3606481340108
Returnability	Yes
Country of origin	FR

Packing Units

Unit Type of Package 1	PCE
Nbr. of units in pkg.	1
Package 1 Height	3.4 in (8.6 cm)
Package 1 Width	1.7 in (4.3 cm)
Package 1 Length	2.05 in (5.2 cm)
Package weight(Lbs)	2.2 oz (63.0 g)

Environmental Data

Schneider Electric aims to achieve Net Zero status by 2050 through supply chain partnerships, lower impact materials, and circularity via our ongoing “Use Better, Use Longer, Use Again” campaign to extend product lifetimes and recyclability.

Environmental Data explained >

How we assess product sustainability >

Environmental footprint

Carbon footprint (kg CO2 eq, Total Life cycle)	1
Environmental Disclosure	Product Environmental Profile

Use Better

Materials and Substances

Packaging made with recycled cardboard	Yes
Packaging without single use plastic	Yes
EU RoHS Directive	Pro-active compliance (Product out of EU RoHS legal scope)
SCIP Number	F28cb399-1b6a-409d-ac7b-4169e47b25c8
REACh Regulation	REACh Declaration
California proposition 65	WARNING: This product can expose you to chemicals including: Lead and lead compounds, which is known to the State of California to cause cancer and birth defects or other reproductive harm. For more information go to www.P65Warnings.ca.gov

Use Again

Repack and remanufacture

Circularity Profile	End of Life Information
Take-back	No

Dimensions Drawings

Dimensions

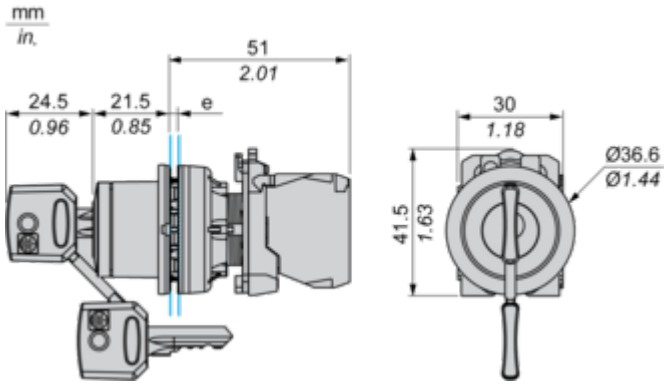

e: Clamping thickness: 1 to 6 mm / 0.04 to 0.24 in.

Mounting and Clearance

Panel Cut-out for Pushbuttons, Switches and Pilot Lights (Finished Holes, Ready for Installation)

Connection by Screw Clamp Terminals or Plug-in Connectors

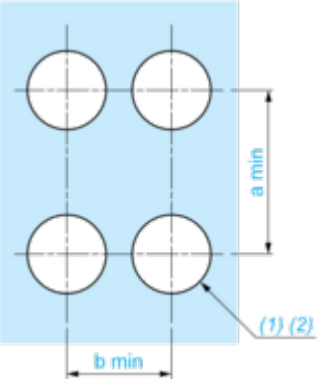

(1) Diameter on finished panel or support

(2) Ø30.75 mm recommended (Ø30.5 $_{0}^{+0.5}$) / Ø1.21 in. recommended (Ø1.20 in. $_{0}^{+0.0196}$)

Connections	a in mm	a in in.	b in mm	b in in.
By screw clamp terminals or plug-in connector	40	1.57	40	1.57
By Faston connectors	45	1.77	40	1.57

Technical Description

Electrical Composition Corresponding to Code C3

Electrical Composition Corresponding to Code C4

Electrical Composition Corresponding to Code C5

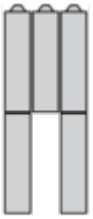

Electrical Composition Corresponding to Code C6

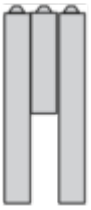

Electrical Composition Corresponding to Code C7

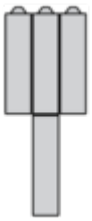

Electrical Composition Corresponding to Code C8

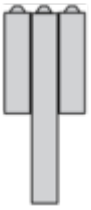

Electrical Composition Corresponding to Codes C9, C11, SF1 and SR1

Electrical Composition Corresponding to Code C15

1 N/O

1 N/C

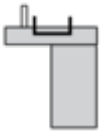

1 N/O + N/C or 1 N/O + N/O or 1 N/C + N/C

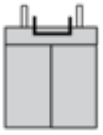

Legend

Single contact

Double contact

Light block

Possible location

Sequence of Contacts Fitted to 2-position Selector Switch Body

Position 315°

Push	Position	Top			
		Bottom			
	Location		Left	Centre	Right
	State		0	0	0
Contacts	N/O		open	open	open
	N/C		closed	closed	closed

Position 45°

Push	Position	Top			
		Bottom			
	Location		Left	Centre	Right
	State		1	1	1
Contacts	N/O		closed	closed	closed
	N/C		open	open	open

Technical Illustration

Dimensions

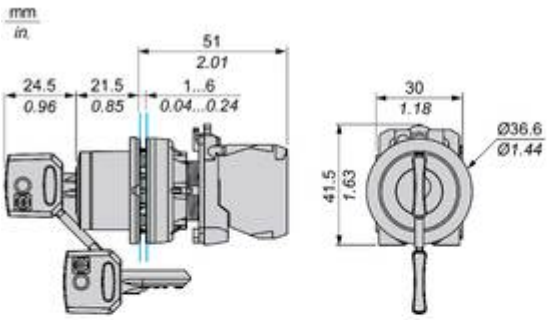

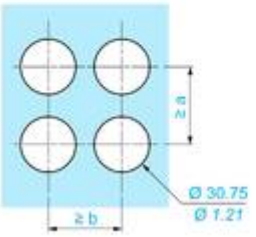

		a (mm)	a (in.)	b (mm)	b (in.)
ZBE●●●●●	ZBV●●●●	40	1.57	40	1.57
ZBE●●●●●3	ZBV●●●●3	45	1.77	40	1.57
ZBE●●●●●4	ZBV●●●●4	40	1.57	40	1.57