Product data sheet

Specifications

Circuit breaker, PowerPacT R, 1200A, 3 pole, 600VAC, 25kA, I-Line, Micrologic 3.0, 100%

RJA36120CU31A

Product availability: Stock - Normally stocked in distribution facility

Main

Range	PowerPact
Product name	PowerPact R
Product or Component Type	Circuit breaker
Device Application	Distribution

Complementary

Line Rated Current	1200 A
Number of Poles	3P
Control Type	Operating handle
Breaking capacity code	J
Breaking capacity	AIR 100 kA 240 V AC 50/60 Hz UL 489 AIR 65 kA 480 V AC 50/60 Hz UL 489 AIR 25 kA 600 V AC 50/60 Hz UL 489 Icu 65 kA 240 V AC 50/60 Hz IEC 60947-2 Icu 50 kA 380/415 V AC 50/60 Hz IEC 60947-2
[Ue] rated operational voltage	600 V AC 50/60 Hz UL 489
Network Frequency	50/60 Hz
[Ics] rated service breaking capacity	35 kA 240 V AC 50/60 Hz IEC 60947-2 25 kA 380/415 V AC 50/60 Hz IEC 60947-2
[Uimp] rated impulse withstand voltage	8 kV IEC 60947-2
Trip unit technology	Electronic, standard, MicroLogic 3.0, LI
Continuous current rating	100 %
[Ui] rated insulation voltage	750 V IEC 60947-2
Trip unit name	MicroLogic 3.0
Suitability for isolation	Yes IEC 60947-2
Utilisation category	Category A
AWG gauge	4 x AWG 3/0…600 kcmil aluminium/copper 4 x AWG 3/0...500 kcmil copper
Local signalling	Alarm 1 LED yellow)long-time pick up)
Mounting mode	I-Line bracket)
Mounting Support	Bracket
Electrical connection	I-Line connection, line Lugs, load
Terminal identifier	AL1200R53K

Price is “List Price” and may be subject to a trade discount – check with your local distributor or retailer for actual price.

Disclaimer: This documentation is not intended as a substitute for and is not to be used for determining suitability or reliability of these products for specific user applications

Tightening torque	442.5 lbf.in (50 N.m) 0.1…0.5 in² (95…300 mm²) (4 x AWG 3/0…600 kcmil)
Number of slots	2 auxiliary switch OF plug-in) 1 alarm switch SD plug-in) 1 voltage release MN or MX plug-in)
Power wire stripping length	1.2 in (30 mm)
Height	16.24 in (412.50 mm)
Width	16.54 in (420.12 mm)
Depth	14.49 in (368.05 mm)
Net Weight	52 lb(US) (23.6 kg)
Quantity per Set	1
Circuit breaker application	HACR rated

Environment

Quality labels	CE
Standards	UL CSA NEMA NMX J-266 IEC 60947-2
Product certifications	UL CSA NOM
IP degree of protection	IP40
Pollution degree	3 IEC 60947-1
Ambient air temperature for operation	-13…158 °F (-25…70 °C)
Ambient Air Temperature for Storage	-58…185 °F (-50…85 °C)
Operating altitude	< 6561.68 ft (2000 m) without derating 13123.36 ft (4000 m) with derating

Ordering and shipping details

Category	US10DE201240
Discount Schedule	0DE2
GTIN	785901788836
Returnability	Yes
Country of origin	US

Packing Units

Unit Type of Package 1	PCE
Nbr. of units in pkg.	1
Package 1 Height	13.00 in (33.02 cm)
Package 1 Width	19.900 in (50.546 cm)
Package 1 Length	19.900 in (50.546 cm)
Package weight(Lbs)	64.0002 lb(US) (29.03 kg)

Environmental Data

Schneider Electric aims to achieve Net Zero status by 2050 through supply chain partnerships, lower impact materials, and circularity via our ongoing “Use Better, Use Longer, Use Again” campaign to extend product lifetimes and recyclability.

Environmental Data explained >

How we assess product sustainability >

Environmental footprint

Carbon footprint (kg CO2 eq, Total Life cycle)	**1642**
Environmental Disclosure	**Product Environmental Profile**

Use Better

Materials and Substances

Packaging made with recycled cardboard	**Yes**
Packaging without single use plastic	**No**
EU RoHS Directive	**Compliant with Exemptions**
REACh Regulation	**REACh Declaration**
California proposition 65	**WARNING: This product can expose you to chemicals including: DINP, which is known to the State of California to cause cancer, and DIDP, which is known to the State of California to cause birth defects or other reproductive harm. For more information go to www.P65Warnings.ca.gov**
Halogen content performance	**Halogen free plastic parts product**
PVC free	**Yes**

Use Again

Repack and remanufacture

Circularity Profile	**End of Life Information**
Removable battery	**Yes**
Take-back	**No**

Technical Illustration
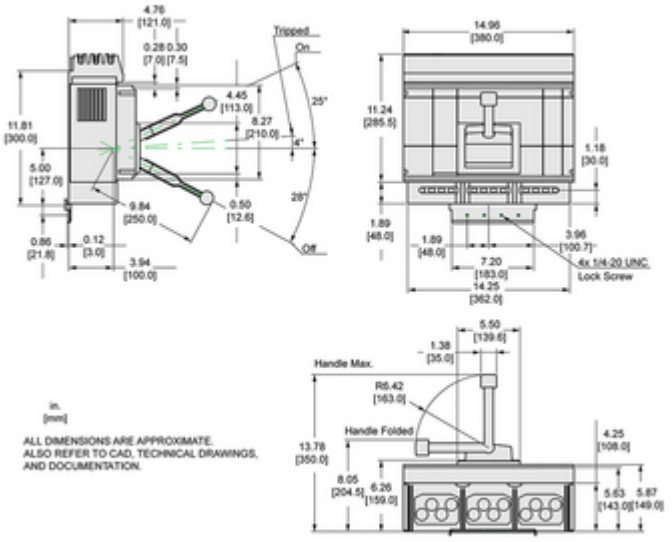
Dimensions