Product data sheet

Specifications

single function relay, Harmony Timer Relays, 5A, 2CO, 0.1s..100h, on delay, 24V AC

REXL2TMB7

Product availability: Non-Stock - Not normally stocked in distribution facility

Main

Range of Product	Harmony Timer Relays
Fixing mode	Plug-in (socket)
Product or Component Type	Miniature timing relay
Discrete output type	Relay
Contacts type and composition	2 C/O
Component name	REXL
Time delay type	Power on-delay
Time delay range	10...100 h 6...60 min 0.1...1 s 1...10 h 1...10 min 6...60 s 1...10 s
Width	0.8 in (21 mm)

Complementary

Contacts material	Cadmium free
[Us] rated supply voltage	24 V AC 50/60 Hz
Voltage range	0.85...1.15 Us
Line Rated Current	5 A AC
Repeat accuracy	+/- 0.5 %
Setting accuracy of time delay	10 % at full scale 25 °C IEC 61812-1
Time delay type	Power on-delay - A- Power on-delay relay
Temperature Drift	0.05 %/°C
maximum reset time	250 ms after time delay, on de-energisation 50 ms during time delay, on de-energisation
Voltage drift	+/- 0.2 %/V
Maximum switching capacity	4 x 5 A
maximum temporary permissible current	10 A < 10 s
minimum switching current	100 mA
Electrical durability	100000 cycles 250 V AC resistive
Mechanical durability	10000000 cycles
maximum power consumption	1.7 VA

Price is “List Price” and may be subject to a trade discount – check with your local distributor or retailer for actual price.

Disclaimer: This documentation is not intended as a substitute for and is not to be used for determining suitability or reliability of these products for specific user applications

[Ui] rated insulation voltage	250 V IEC 255 Group C 250 V VDE 0010
Output overvoltage protection	2 J
Surge withstand	2 kV IEC 61000-4-5 level 3
Creepage distance	4 kV/3 IEC 60664-1
Local signalling	1 LED (red) for output in operation 1 LED (yellow) for power ON
Function available	A- Power on-delay relay-2 C/O
Control Type	Without test button
Shape of pin	Flat
Number of functions	1
Net Weight	0.11 lb(US) (0.05 kg)

Environment

Immunity to microbreaks	5 ms
Dielectric strength	2 kV 1 mA/1 minute 50 Hz IEC 60601-1 2 kV 1 mA/1 minute 50 Hz IEC 61812-1
Standards	EN 50081-2 IEC 61000-6-2 IEC 60601-2 IEC 61812-1 93/68/EEC 73/23/EEC 89/336/EEC IEC 60601-1
Product Certifications	UL cUL
Ambient Air Temperature for Operation	-4…140 °F (-20…60 °C)
Ambient Air Temperature for Storage	-40…158 °F (-40…70 °C)
IP degree of protection	IP50 conforming to IEC 60529
Vibration resistance	0.35 mm (f= 10…55 Hz) conforming to IEC 60068-2-6
Relative Humidity	95 % without condensation IEC 60068-2-6
Resistance to electrostatic discharge	6 kV in contact IEC 61000-4-2 level 3 8 kV in air IEC 61000-4-2 level 3
Resistance to electromagnetic fields	9.1 V/m (10 V/m) IEC 61000-4-3 level 3
Resistance to fast transients	2 kV IEC 61000-4-4 level 3
Immunity to radioelectric fields	10 V 0.15...80 MHz)IEC 61000-4-6 level 3
Immunity to voltage dips	>= 95 % / 1 s IEC 61000-4-11 30 % / 10 ms IEC 61000-4-11 60 % / 100 ms IEC 61000-4-11
Disturbance radiated/conducted	Class B EN 55022 (EN 55011 group 1)

Ordering and shipping details

Category	US10CP222370
Discount Schedule	0CP2
GTIN	3389119400022
Returnability	Yes
Country of origin	ID

Packing Units

Unit Type of Package 1	PCE
Nbr. of units in pkg.	1
Package 1 Height	1.220 in (3.100 cm)
Package 1 Width	1.220 in (3.100 cm)
Package 1 Length	2.953 in (7.500 cm)
Package weight(Lbs)	1.764 oz (50.000 g)
Unit Type of Package 2	S01
Number of Units in Package 2	48
Package 2 Height	5.906 in (15.000 cm)
Package 2 Width	5.906 in (15.000 cm)
Package 2 Length	15.748 in (40.000 cm)
Package 2 Weight	5.915 lb(US) (2.683 kg)

Contractual warranty

Warranty (in months)	18

Environmental Data

Schneider Electric aims to achieve Net Zero status by 2050 through supply chain partnerships, lower impact materials, and circularity via our ongoing “Use Better, Use Longer, Use Again” campaign to extend product lifetimes and recyclability.

Environmental Data explained >

How we assess product sustainability >

Environmental footprint

Carbon footprint (kg CO2 eq, Total Life cycle)	59
Environmental Disclosure	Product Environmental Profile

Use Better

Materials and Substances

Packaging made with recycled cardboard	Yes
Packaging without single use plastic	Yes
EU RoHS Directive	Pro-active compliance (Product out of EU RoHS legal scope)
SCIP Number	1b9c3411-e0e2-4832-adc7-e6e2a8e06cab
REACh Regulation	REACh Declaration
California proposition 65	WARNING: This product can expose you to chemicals including: Nickel compounds, which is known to the State of California to cause cancer, and Di-isodecyl phthalate (DIDP), which is known to the State of California to cause birth defects or other reproductive harm. For more information go to www.P65Warnings.ca.gov

Use Again

Repack and remanufacture

Circularity Profile	No need of specific recycling operations
Take-back	No

Dimensions Drawings

Width 21 mm

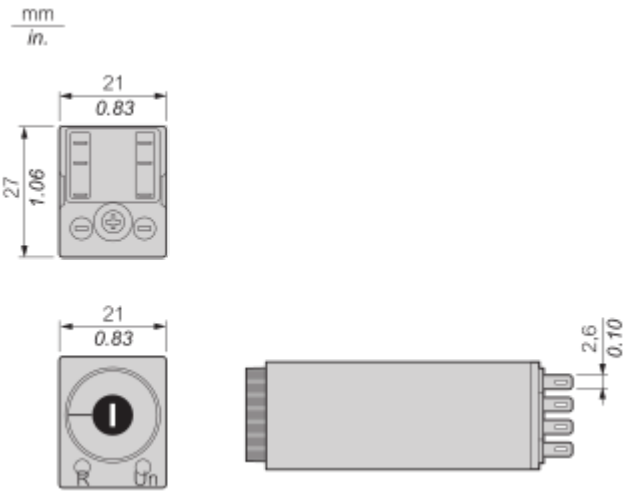

Connections and Schema

Terminal Referencing

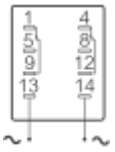

Technical Description

Function A : Power on Delay Relay

Description

The timing period T begins on energisation. After timing, the outputs close.
2 Timed C/O Contacts

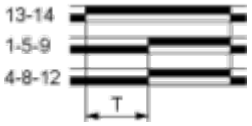

Legend

Relay de-energised
Relay energised
Output open
Output closed

R	Relay output
T	Timing period

Technical Illustration

Dimensions

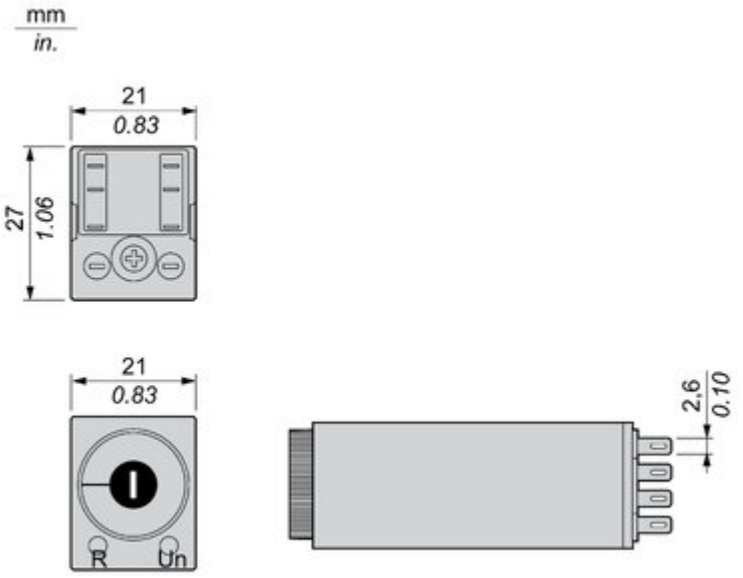

Offer Marketing Illustration

Product benefits / Features

Offer Marketing Illustration

Product benefits / Features

Image of product / Alternate images

Alternative

REXL2TMB7
1
4
5
8
9
12
13
14

1-10min
0.1-1min
0.1-1h
1-10s
1-10h
0.1-1s
10-100h
Un
R
T
YYWW

REXL2TMP7
5A 230VAC
AC12
1
4
5
8
9
12
13
14
Un
12 VDC
-
+
Telemecanique
Made in Indonesia

Image of product in real life situation