PowerLogic™ HDPM6000 Series Current Transducer Installation Manual

Z208152-0G

The PowerLogic™ HDPM6000 series low-voltage current transducers (LVCT) provide secondary AC voltage proportional to the primary (sensed) alternating current. For use with the HDPM6000 platform only, these current transducers provide a means to transform electrical service amperages to a voltage compatible with monitoring equipment.

www.se.com
HDPM6000 Series Current Transducer Models

Refer to the following installation guides (part number):

HDPM6000B (Z208131), HDPM6000 Head Unit (Z208128), HDPM6000 I/O Module (Z208142), HDPM6000R (Z208129), HDPM6000S24 (Z208449) and HDPM6000S (Z208130).

1 Safety Information

Important Information

Read these instructions carefully and look at the equipment to become familiar with the device before trying to install, operate, service or maintain it. The following special messages may appear throughout this bulletin or on the equipment to warn of potential hazards or to call attention to information that clarifies or simplifies a procedure.

The addition of either symbol to a “Danger” or “Warning” safety label indicates that an electrical hazard exists which will result in personal injury if the instructions are not followed.

This is the safety alert symbol. It is used to alert you to potential personal injury hazards. Obey all safety messages that follow this symbol to avoid possible injury or death.

DANGER

DANGER indicates a hazardous situation which, if not avoided, **will result in** death or serious injury.

WARNING

WARNING indicates a hazardous situation which, if not avoided, **could result in** death or serious injury.

CAUTION

CAUTION indicates a hazardous situation which, if not avoided, **could result in** minor or moderate injury.

NOTICE

NOTICE is used to address practices not related to physical injury.

Please Note

Electrical equipment should be installed, operated, serviced and maintained only by qualified personnel. No responsibility is assumed by Schneider Electric for any consequences arising out of the use of this material. A qualified person is one who has skills and knowledge related to the construction, installation and operation of electrical equipment and has received safety training to recognize and avoid the hazards involved.

Installation, wiring, testing and service must be performed in accordance with all local and national electrical codes.

2 Safety Precautions

DANGER

HAZARD OF ELECTRIC SHOCK, EXPLOSION, OR ARC FLASH

- Apply appropriate personal protective equipment (PPE) and follow safe electrical work practices. See NFPA 70E in the USA or applicable local standards.
- This equipment must only be installed and serviced by qualified electrical personnel.
- Turn off all power supplying equipment before working on or inside the equipment.
- Product may use multiple voltage/power sources. Disconnect all sources of power before servicing.
- Always use a properly rated voltage sensing device to confirm power is off.
- Do not depend on this product for voltage indication.
- Products rated for basic insulation must be installed on insulated conductors.
- Replace all doors, covers and protective devices before powering the equipment.
- Install device in an appropriate electrical and fire enclosure per local regulations.
- This product is not intended for life or safety applications.
- To reduce the risk of electric shock, always open or disconnect circuit from power-distribution system (or service) of building before installing of servicing current transformers.

Failure to follow these instructions will result in death or serious injury.

2 Safety Precautions

⚠ WARNING

RISK OF INJURY OR EQUIPMENT DAMAGE

- Do not apply current transducer to circuits having a phase-to-phase voltage greater than their voltage rating unless adequate additional insulation is applied between the primary conductor and the current transducers.
- Do not install current transformer in a panel where they exceed 75% of the wiring space of any cross-sectional area within the panel.
- Do not install the current transformer in the area of the breaker arc venting.
- Do not install current transformer using Class 2 wiring methods or connect to Class 2 equipment (NFPA 70).
- Do not exceed 120% of the rated primary current.
- Always use a current transformer of appropriate rating for the application.
- Do not install the current transformer in an area where it would obstruct ventilation openings.
- Secure current transformer and route conductors so that they do not directly contact live terminals or bus.
- Do not strip the insulation from the CTs lead wires connected to the retrofit module.

Failure to follow these instructions may result in injury, fire or equipment damage.

Schneider Electric assumes no responsibility for damage of equipment or personal injury caused by products operated on circuits above their published ratings.

3 Ordering Information

The connectors for the CTs compatible with HDPM6000 Head Unit, Retrofit module, IO module, and Busway module are provided with the meter. The CTs for these modules are not terminated with any connectors. If the lead length is too long, they can be cut to the desired length without affecting the CT accuracy. Refer to the Installation section for more details.

CTs specifically designed for the HDPM6000S24 and HDPM6000S have a connector pre-installed at the end of the lead wires. Due to the different connector form factor between the HDPM6000S24 and HDPM6000S, a CT designed for the HDPM6000S24 is not compatible with the HDPM6000S, and vice versa. Any HDPM6000 CT that is not factory terminated with a connector can be used with the HDPM6000S24 by using the connectors from METSEHDPMS24CTCON kit.

Difference in connector between the HDPM6000S24 and HDPM6000S:

HDPM6000S24		HDPM6000S	
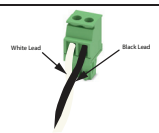		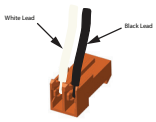	
HDPM6000S24	✔	HDPM6000S24	✘
HDPM6000S	✘	HDPM6000S	✔
		HDPM6000S CTs are provided with factory-terminated connector.	

CTs Compatible With HDPM6000 Head Unit, HDPM6000R Retrofit Module and I/O Module						
Commercial Reference / Model	**Lead Length**	**Weight**	**Form Factor**	**Accuracy**	**Description**	**Type of CT**
METSEHDPM20A12H	12 ft (3.66 m)	1.088 lb (0.494 kg)	SUN2	0.2%	20 A CT	Split-Core
METSEHDPM20A30H	30 ft (9.14 m)	1.946 lb (0.883 kg)				
METSEHDPM75A12	12 ft (3.66 m)	0.350 lb (0.159 kg)	CTMF	1.0%	75 A CT	
METSEHDPM75A12H	12 ft (3.66 m)	1.137 lb (0.516 kg)	SUN3	0.2%		
METSEHDPM75A30	30 ft (9.14 m)	0.710 lb (0.322 kg)	CTMF	1.0%		
METSEHDPM75A30H	30 ft (9.14 m)	1.996 lb (0.905 kg)	SUN3	0.2%		
METSEHDPM75A60H	60 ft (18.29 m)	2.596 lb (1.177 kg)				
METSEHDPM75A60	60 ft (18.29 m)	2.305 lb (1.046 kg)	CTMF	1.0%		
METSEHDPM125A12	12 ft (3.66 m)	0.350 lb (0.159 kg)	CTTG	0.1%	125 A CT	Solid-Core
METSEHDPM125A30	30 ft (9.14 m)	0.710 lb (0.322 kg)				
METSEHDP150A30H	30 ft (9.14 m)	2.046 lb (0.928 kg)	SUN3	0.2%	150 A CT	Split-Core
METSEHDP150A60H	60 ft (18.29 m)	2.646 lb (1.200 kg)				
METSEHDPM150A12	12 ft (3.66 m)	1.137 lb (0.516 kg)	SUS4	0.5%		
METSEHDPM150A30	30 ft (9.14 m)	1.996 lb (0.905 kg)				
METSEHDPM150A60	60 ft (18.29 m)	2.595 lb (1.177 kg)				
METSEHD150A12	12 ft (3.66 m)	1.167 lb (0.529 kg)	SUSF (Small)	1.0%	150 A CT, 1 in x 1 in (2.54 cm x 2.54 cm)	
METSEHD150A30	30 ft (9.14 m)	2.026 lb (0.919 kg)				
METSEHD150A60	60 ft (18.29 m)	2.625 lb (1.190 kg)				
METSEHDP300A12H	12 ft (3.66 m)	1.287 lb (0.584 kg)	SUN4	0.2%	300 A CT	
METSEHDPM300A12	12 ft (3.66 m)	1.187 lb (0.538 kg)	SUS4	0.5%		
METSEHDPM300A30	30 ft (9.14 m)	2.046 lb (0.928 kg)				
METSEHDPM300A30H	30 ft (9.14 m)	2.146 lb (0.973 kg)	SUN4	0.2%		
METSEHDPM300A60H	60 ft (18.29 m)	2.746 lb (1.245 kg)				
METSEHDPM300A60	60 ft (18.29 m)	2.645 lb (1.200 kg)	SUS4	0.5%		

CTs Compatible With HDPM6000 Head Unit, HDPM6000R Retrofit Module and I/O Module						
Commercial Reference / Model	Lead Length	Weight	Form Factor	Accuracy	Description	Type of CT
METSEHD300A12	12 ft (3.66 m)	0.727 lb (0.229 kg)	SUSF (Small)	1.0%	300 A CT, 1 in x 1 in (2.54 cm x 2.54 cm)	Split-Core
METSEHD300A30	30 ft (9.14 m)	1.069 lb (0.484 kg)				
METSEHD300A60	60 ft (18.29 m)	1.620 lb (0.734 kg)				
METSEHD300A12L	12 ft (3.66 m)	1.646 lb (0.747 kg)			300 A CT, 2 in x 2 in (5.08 cm x 5.08 cm)	
METSEHD300A30L	30 ft (9.14 m)	2.505 lb (1.136 kg)				
METSEHD300A60L	60 ft (18.29 m)	3.104 lb (1.408 kg)				
METSEHDP300A08H	8 ft (2.44 m)	1.996 lb (0.905 kg)	CTTB	0.2%	300 A CT	Solid-Core
METSEHDPM400A12	12 ft (3.66 m)	1.287 lb (0.584 kg)	SUS4	0.5%	400 A CT	Split-Core
METSEHDPM400A30	30 ft (9.14 m)	2.146 lb (0.973 kg)				
METSEHDPM400A60	60 ft (18.29 m)	2.744 lb (1.245 kg)				
METSEHDPM400A12H	12 ft (3.66 m)	1.387 lb (0.629 kg)	SUN4	0.2%		
METSEHDPM400A30H	30 ft (9.14 m)	2.245 lb (1.018 kg)				
METSEHDPM400A60H	60 ft (18.29 m)	2.945 lb (1.290 kg)				
METSEHD400A30L	30 ft (9.14 m)	2.714 lb (1.231 kg)	SUSF (Small)	1.0%	400 A CT, 2.5 in x 2.5 in (6.35 cm x 6.35 cm)	
METSEHD400A60L	60 ft (18.29 m)	3.313 lb (1.503 kg)				
METSEHDPM600A12	12 ft (3.66 m)	0.771 lb (0.350 kg)	SUS4	0.5%	600 A CT	
METSEHDPM600A30	30 ft (9.14 m)	1.124 lb (0.509 kg)				
METSEHDPM600A60	60 ft (18.29 m)	1.675 lb (0.759 kg)				
METSEHD600A12	12 ft (3.66 m)	1.676 lb (0.760 kg)	SUSF (Small)	1.0%	600 A CT, 3 in x 3 in (7.62 cm x 7.62 cm)	
METSEHD600A30	30 ft (9.14 m)	2.535 lb (1.150 kg)				
METSEHD600A60	60 ft (18.29 m)	3.133 lb (1.421 kg)				
METSEHD800A12	12 ft (3.66 m)	2.075 lb (0.941 kg)			800 A CT, 4 in x 4 in (10.16 cm x 10.16 cm)	
METSEHD800A30	30 ft (9.14 m)	2.934 lb (1.331 kg)				
METSEHD800A60	60 ft (18.29 m)	3.533 lb (1.603 kg)				
METSEHD1000A30	30 ft (9.14 m)	2.934 lb (1.330 kg)			1000 A CT, 4 in x 4 in (10.16 cm x 10.16 cm)	
METSEHD1000A60	60 ft (18.29 m)	3.534 lb (1.602 kg)				
METSEHD1200A30	30 ft (9.14 m)	3.054 lb (1.385 kg)			1200 A CT, 4 in x 6 in (10.16 cm x 15.24 cm)	
METSEHD1200A60	60 ft (18.29 m)	3.654 lb (1.657 kg)				
METSEHD1600A30	30 ft (9.14 m)	3.173 lb (1.439 kg)	SUSF (Medium)	1.0%	1600 A CT, 4 in x 6 in (10.16 cm x 15.24 cm)	
METSEHD1600A60	60 ft (18.29 m)	3.773 lb (1.711 kg)				
METSEHD1600A30L	30 ft (9.14 m)	3.173 lb (1.439 kg)			1600 A CT, 4.5 in x 4.5 in (11.43 cm x 11.43 cm)	
METSEHD2000A30	30 ft (9.14 m)	4.650 lb (2.109 kg)	SUSF (Medium)	1.0%	2000 A CT, 4 in x 6 in (10.16 cm x 15.24 cm)	
METSEHD2000A60	60 ft (18.29 m)	5.250 lb (2.380 kg)				
METSEHD2000A30L	30 ft (9.14 m)	4.480 lb (2.032 kg)			2000 A CT, 6 in x 3 in (15.24 cm x 7.62 cm)	
METSEHD3000A30	30 ft (9.14 m)	4.271 lb (1.937 kg)	SUSF (Large)	1.0%	3000 A CT, 4 in x 4 in (10.16 cm x 10.16 cm)	
METSEHD3000A30L	30 ft (9.14 m)	4.430 lb (2.009 kg)			3000 A CT, 4 in x 6 in (10.16 cm x 15.24 cm)	
METSEHD4000A30	30 ft (9.14 m)	5.289 lb (2.399 kg)			4000 A CT, 5 in x 12 in (12.7 cm x 30.48 cm)	

CTs Compatible With HDPM6000B Busway Module						
Commercial Reference / Model	Lead Length	Weight	Form Factor	Accuracy	Description	Type of CT
METSEHDPM75A16	16 in (40.64 cm)	0.639 lb (0.290 kg)	CTMF	1.0%	75 A CT	Split-Core
METSEHDPM125A16	16 in (40.64 cm)	0.140 lb (0.064 kg)	CTTG	0.1%	125 A CT	Solid-Core
METSEHDPM150A16	16 in (40.64 cm)	0.928 lb (0.421 kg)	SUS4	0.5%	150 A CT	Split-Core
METSEHDPM300A16	16 in (40.64 cm)	0.978 lb (0.444 kg)			300 A CT	
METSEHDPM400A16	16 in (40.64 cm)	1.078 lb (0.489 kg)			400 A CT	
METSEHDP600A16	16 in (40.64 cm)	1.177 lb (0.534 kg)			600 A CT	

CTs Compatible With HDPM6000S 21 Circuit Strip Module						
Commercial Reference / Model	Lead Length	Weight	Form Factor	Accuracy	Description	Type of CT
METSEHDPM75A4	4 in (10.16 cm)	0.629 lb (0.285 kg)	CTMF	1.0%	75A CT terminated with 21 circuit strip module connector	Split-Core
METSEHDPM125A10	10 in (25.4 cm)	0.130 lb (0.059 kg)	CTTG	0.1%	125A CT terminated with 21 circuit strip module connector	Solid-Core
METSEHDPM125A4	4 in (10.16 cm)	0.130 lb (0.059 kg)				
METSEHDPM125A12P	12 in (30.48 cm)	0.130 lb (0.059 kg)				
METSEHDPM150A5	5 in (12.7 cm)	0.918 lb (0.416 kg)	SUS4	0.5%	150A CT terminated with 21 circuit strip module connector	Split-Core
METSEHDPM300A5	5 in (12.7 cm)	0.968 lb (0.439 kg)	SUS4	0.5%	300A CT terminated with 21 circuit strip module connector	Split-Core
METSEHDPM400A5	5 in (12.7 cm)	1.068 lb (0.484 kg)			400A CT terminated with 21 circuit strip module connector	
METSEHDP600A5	5 in (12.7 cm)	1.167 lb (0.529 kg)	SUS4	0.5%	600A CT terminated with 21 circuit strip module connector	Split-Core

3 Ordering Information

CTs Compatible With HDPM6000S24 24 Circuit Strip Module						
Commercial Reference / Model	**Lead Length**	**Weight**	**Form Factor**	**Accuracy**	**Description**	**Type of CT**
METSEHDPM50A18P	18 in (45.72 cm)	0.104 lb (0.047 kg)	CTTA	0.2%	50A CT terminated with 24 circuit strip module connector	Solid-Core
METSEHDPM250A2T12	12 ft (3.66 m)	0.551 lb (0.250 kg)	SUST2	0.5%	250 A CT, without connector	Solid-Core
METSEHDPM500A2T12	12 ft (3.66 m)	0.639 lb (0.290 kg)	SUST2	0.5%	500 A CT, without connector	Solid-Core

CTs connector kit for using any CT without connector with the HDPM6000S24 Strip Module	
Commercial Reference / Model	**Description**
METSEHDPMS24CTCON	6 Nos, CT Connectors for HDPM6000S24 (Screw type)

4 Application Diagram

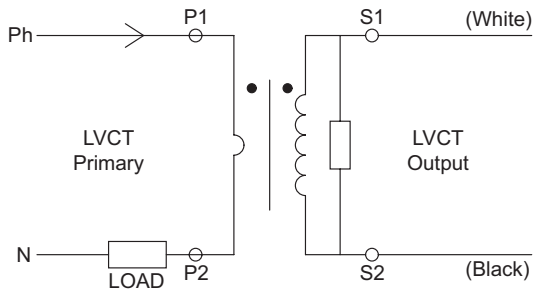

5 Specifications

Form Factor	Accuracy	Operating Temperature Range	Storage Temperature Range	Leads	Altitude of Operation	Installation Category	Agency Approvals
SUN2	0.2%	-40 °F to 131 °F (-40 °C to 55 °C)	-40 °F to 167 °F (-40 °C to 75 °C)	Black and white twisted pair 18 AWG, AWM, UL1015, 600 V, 221 °F (105 °C)	6562 ft (2000 m) max	Cat III, Pollution Degree 2	UL2808, CE
SUN3							
SUN4						Cat III, Pollution Degree 3	
SUS4	0.5%						
SUSF	1%	-40 °F to 158 °F (-40 °C to 70 °C)	-40 °F to 176°F (-40 °C to 80 °C)			Cat IV, Pollution Degree 3	
CTMF	1%	-40 °F to 131 °F (-40 °C to 55 °C)	-58 °F to 140 °F (-50 °C to 60 °C)	Black and white twisted pair 22 AWG, AWM, UL1015, 600 V, 221 °F (105 °C)		Cat III, Pollution Degree 2	IEEE C57.13, CAN / CSA-C61869-1:14, CAN / CSA-C61869-2:14, CE
CTTG	0.1%	-40 °F to 185 °F (-40 °C to 85 °C)	-58 °F to 221 °F (-50 °C to 105 °C)	Black and white twisted pair 18 AWG, AWM, UL1015, 600 V, 221 °F (105 °C)			UL2808, CE
CTTA	0.2%	-40 °F to 185 °F (-40 °C to 85 °C)	-40 °F to 185 °F (-40 °C to 85 °C)	Black and white twisted pair 22 AWG, AWM, UL1015, 600 V, 221 °F (105 °C)			UL2808, CE
CTTB	0.2%			Black and white twisted pair 18 AWG, AWM, UL1015, 600 V, 221 °F (105 °C)			UL Recognized, CE
SUST2	0.5%						UL2808, CE

Following specifications are common for all form factors:

Output at Rated Current: 0.25 VAC

Frequency Range: 50/60 Hz

Humidity Range: 0 to 95% noncondensing

Continuous Current Rating Factor: 1

Max. Voltage L-N Sensed Conductor: 600 VAC

6 Dimensions

SUN2, SUN3, SUN4 and SUS4

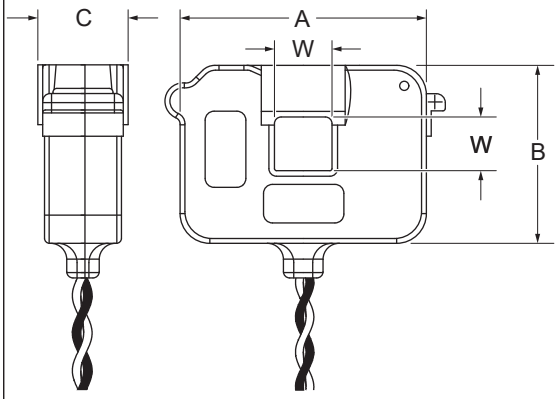

Model	W Window	A Dimension	B Dimension	C Dimension
SUN2	0.4 in (10.17 mm)	2.4 in (60.69 mm)	1.65 in (41.91 mm)	1.15 in (29.21 mm)
SUN3	0.7 in (17.80 mm)	3.0 in (76.19 mm)	2.4 in (60.96 mm)	1.17 in (29.72 mm)
SUN4	1.25 in (31.75 mm)	3.3 in (83.81 mm)	3.1 in (78.74 mm)	1.3 in (31.04 mm)
SUS4	1.25 in (31.75 mm)	3.3 in (83.81 mm)	3.1 in (78.74 mm)	1.3 in (31.04 mm)

SUSF

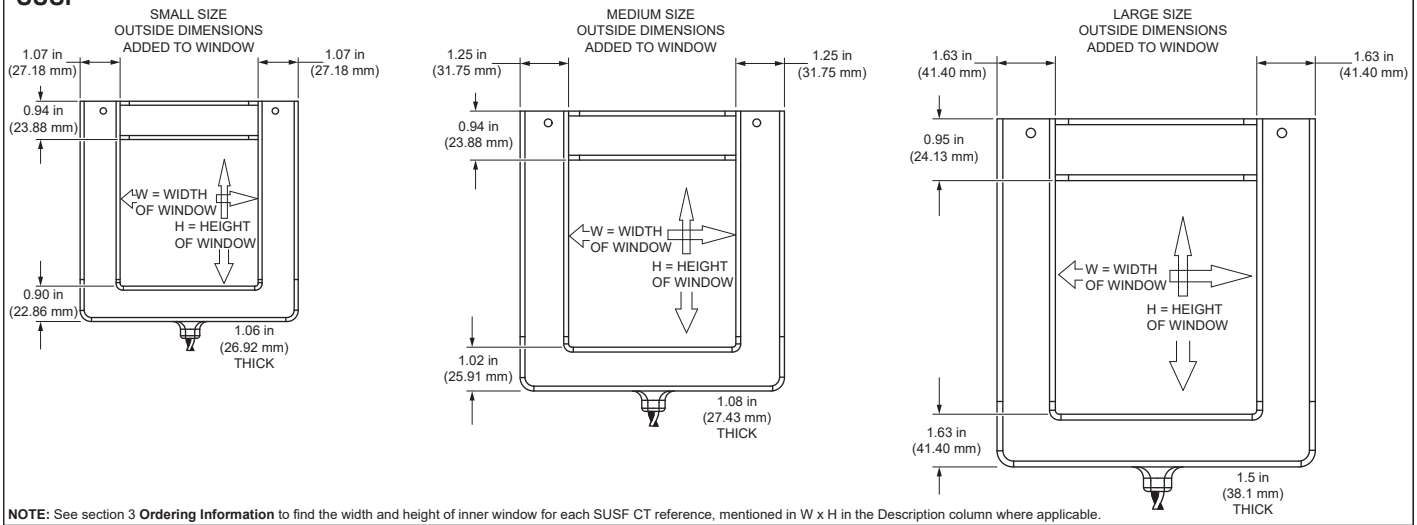

NOTE: See section 3 **Ordering Information** to find the width and height of inner window for each SUSF CT reference, mentioned in W x H in the Description column where applicable.

CTMF

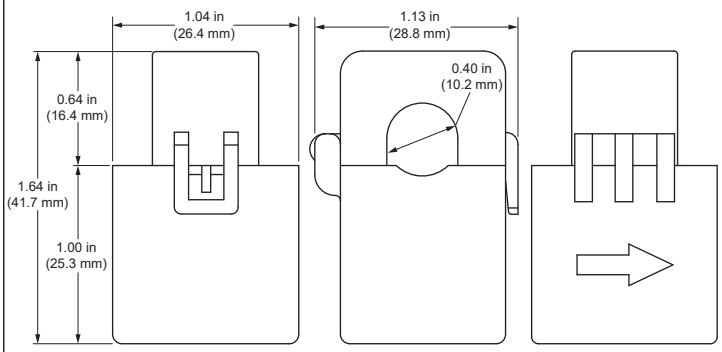

CTTG

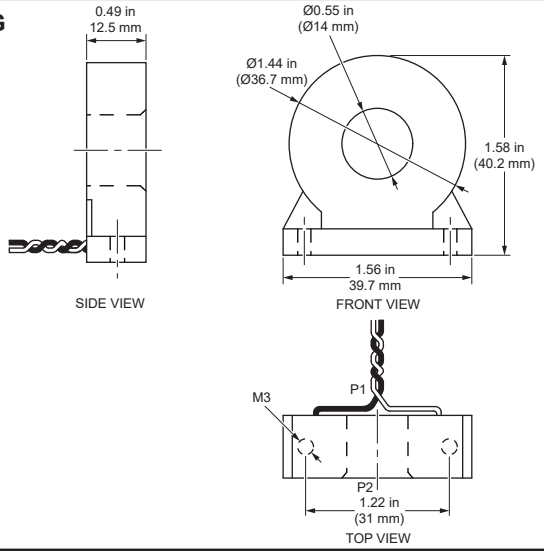

CTTA

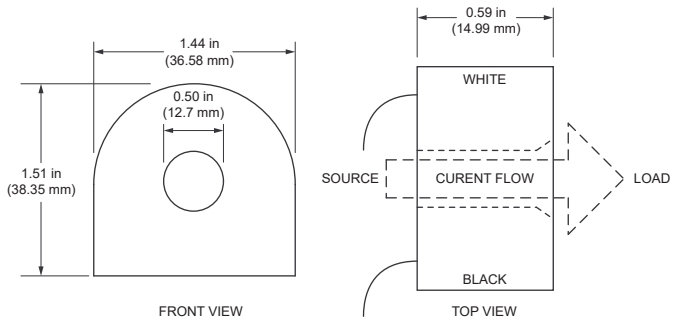

CTTB

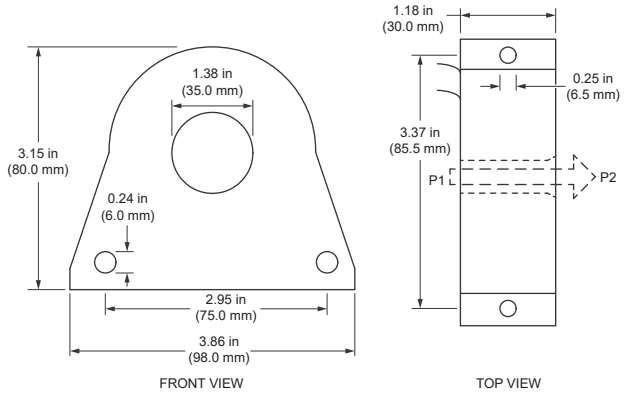

6 Dimensions

SUST2

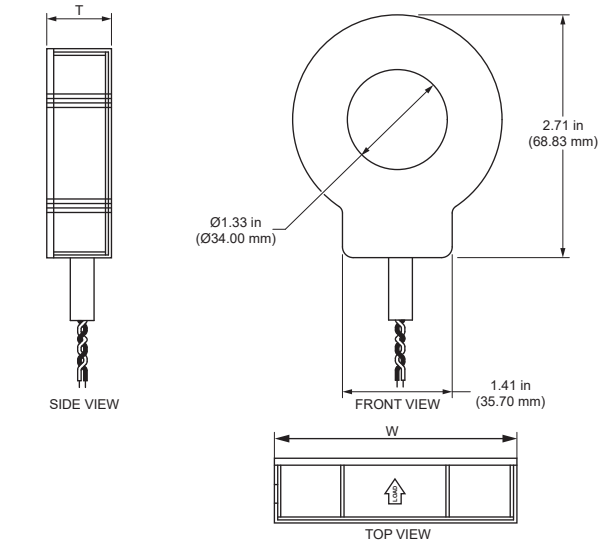

Amperage	T	W
250 A	0.70 in (18.00 mm)	2.52 in (64.00 mm)
500 A	1.37 in (35.00 mm)	2.40 in (61.00 mm)

7 Installation

Installation of CTs with HDPM6000

1. Turn off and lock out power to the primary circuit before installing these CTs. Use a properly rated voltage sensing device to confirm that power is off.
2. Connect CT outputs only to the HDPM6000 meter without connecting either wire to ground or neutral.
3. The HDPM6000 CTs are LVCTs, and the use of a shorting block is not required for the CT secondary outputs.

7.1 Installing the CTs with a Head Unit, IO module or Busway module

1. If the CT lead wires are too long, they can be cut to the desired length without affecting the CT accuracy.
2. Strip the CT lead ends to 7mm using the appropriate stripping tool. Ensure that all the metal strands of each lead are completely inserted into the intended socket of the connector.
3. Ensure that the tightening torque range is from 0.22 Nm to 0.25 Nm (1.95 lb-in to 2.21 lb-in).

7.2 Installing the CTs with a Retrofit Module

1. The Retrofit module contains insulation displacement CT terminals. CTs used with this module must have the lead wire ends trimmed to remove the portion that is stripped and tinned, so that the insulation is flush with the end of the wire.
2. The CTs provided for these modules are not terminated with any connectors.
3. If the CT lead wires are too long, they can be cut to the desired length without affecting the CT accuracy, but do not strip the insulation from the CTs lead wires connected to the retrofit module.
4. Insert the unstripped CT lead wire into each CT connector slot and rotate the connector fully with a 1/8 inch screwdriver. Refer to the ANSI and IEC wiring diagrams in the HDPM6000R Installation Guide for the correct terminal locations and polarity for each channel.

7.3 Installing the CTs with a Strip Module

7.3.1 HDPM6000S 21 Circuit Strip Module

The CTs provided for this strip are factory-terminated with a connector. Plug the CT connector into the HDPM6000S 21 Circuit Strip Model CT connector slot.

7.3.2 HDPM6000S24 24 Circuit Strip Module

1. When using a CT factory-terminated with a connector, plug the CT connector into the HDPM6000S24 24 Circuit Strip Module CT connector slot.
2. When using the connectors from the METSEHDPMS24CTCON kit
   - Strip the CT lead ends to 7mm using the appropriate stripping tool. Ensure that all the metal strands of each lead are completely inserted into the intended socket of the connector.
   - Ensure that the tightening torque range is from 0.22 Nm to 0.25 Nm (1.95 lb-in to 2.21 lb-in).

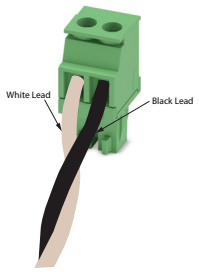

7 Installation

NOTICE

INCORRECT POLARITY OR CT WIRE MISCONNECTION

- Align CT arrow to point in the direction of the power flow.
- Ensure that the CT lead wires are installed in the correct slot, either on the module connector or the METSEHDPMS24CON kit connector.
- Paired lead wires must be kept together.

Failure to follow this instruction can result in incorrect readings or loss of data or damage to equipment.

SUN2, SUN3, SUN4, SUS4, and SUSF Installation

Busbar and Phase Orientation

- The white mark ensures orientation every time the top is attached.
- The white marks on the ends of U-bar and I-bar must match.
- The white mark is on the top right side when looking at the product label.
- Refer to label for correct CT orientation.

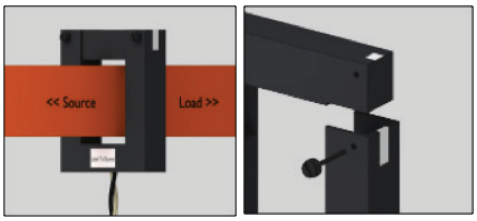

Proper Size and Fitting

- The window of the CT should be big enough to fit the busbar without excess space.
- A split-core CT should not be oversized around the bus/conductor, resulting in an inaccurate/bad reading.
- The busbar should also be in the center of the CT window to allow the coils to energize evenly.

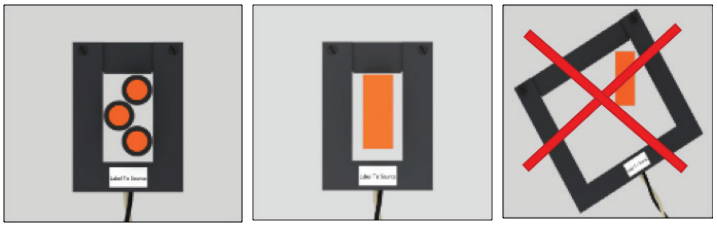

Installation

1. Remove the screws (or push-pins) from the CT and take the top off.
2. Slide the body of the CT over the busbar.

   NOTE: Refer to label for correct CT orientation.
3. Re-attach the top to the body of the CT, using the white mark to orient how the top will fit.
4. Place the screws/push-pins back to secure the top to the CT.

Note: Do not interchange I-bars between the CTs.

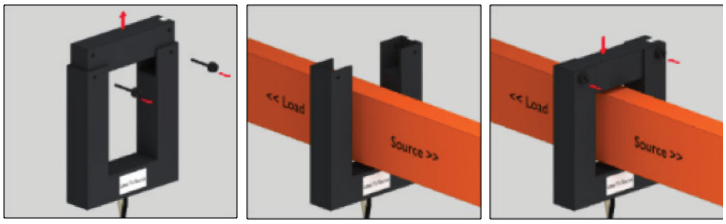

CTMF Installation

1. Release the clasp on one side of the CT and open it on the hinge.

   NOTE: Check the core ends on both sections of the CT to ensure there is no rust or debris in the closure areas. A label on the product indicates the source side. In the illustrated diagram, the arrow indicates the current flow (i.e., the label faces away from the circuit breaker).
2. Wrap the CT around the primary lead.
3. Close the CT until the clasp clicks into place to ensure that the contact surfaces are firmly seated.

   CTs may be simply hung on the wire on which they snap around. An alternative is the use of VELCRO® strips on the bottom or hinged side of the unit, to allow for ease of mounting and removal as necessary. VELCRO is non-conductive.

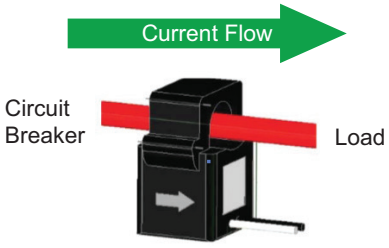

CTTA, CTTB, CTTG, and SUST2 Installation

1. Route the primary conductor through the center of the CT and complete the conductor connections.

   NOTE: A label on the product indicates the source side. All solid-core CT models should be oriented such that the wire leads face the source.

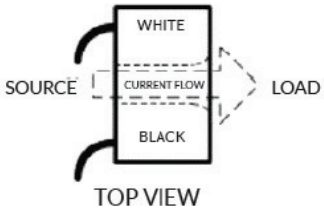

NOTE: After the CTs are installed and the CT connectors are plugged, reconnect power to the panel.

Schneider Electric
35, rue Joseph Monier
92500 Rueil Malmaison
France
+33 (0) 1 41 29 70 00
www.se.com

Schneider Electric Limited
Stafford Park 5
Telford TF3 3BL
United Kingdom

Z208152-0G
© **2024** Schneider Electric. All rights reserved.
11/2024