Product data sheet

Specifications

Harmony Hub wireless serial line gateway, Harmony XB5R, Zigbee green power gateway, wireless to modbus, 24...240V AC DC

ZBRN2

To be discontinued

To be discontinued on: Aug 31, 2026

Product availability: Stock - Normally stocked in distribution facility

Main

Range of Product	Harmony
Product or Component Type	Harmony Hub wireless/Serial Line gateway
Device short name	ZBRN2
Product Specific Application	Wireless Schneider Electric devices ecosystem
Function of module	Zigbee green power concentrator
Communication port protocol	Modbus client application
Antenna type	Integrated
Transmission frequency	2405…2480 MHz

Complementary

Maximum radio communication distance	328.08 ft (100 m) in free field 820.2 ft (250 m) if a relay antenna is located between the transmitter and Harmony Hub 196.9 ft (60 m) if an external antenna is connected to Harmony Hub 82.02 ft (25 m) with Harmony Hub installed in a metal housing or in a closed metal enclosure
Radio response time	< 30 ms
Radio channels utilisation	<= 60 devices
[Us] Rated Supply Voltage	24...240 V AC/DC 50/60 Hz - 10...10 %
Immunity to microbreaks	10 ms
Maximum power consumption in W	4 W AC/DC
Breaking capacity	15 W
Breaking capacity	750 VA
Control circuit frequency	50...60 Hz +/- 10 %
Short-circuit protection	16 A GB2 circuit breaker
Operating position	Any position
Mounting support	35 mm symmetrical DIN rail conforming to IEC 60715 Mounting plate

Disclaimer: This documentation is not intended as a substitute for and is not to be used for determining suitability or reliability of these products for specific user applications

Price is “List Price” and may be subject to a trade discount – check with your local distributor or retailer for actual price.

Electrical connection	1 conductor cable 0.0003…0.006 in² (0.2…4 mm²) - AWG 24...AWG 12 - solid - without cable end IEC 60947-1 2 conductors cable 0.0003…0.002 in² (0.2…1.5 mm²) - AWG 24...AWG 16 - solid - without cable end IEC 60947-1 1 conductor cable 0.0003…0.001 in² (0.2…0.75 mm²) - AWG 24...AWG 14 - flexible - with cable end IEC 60947-1 2 conductors cable 0.0003…0.004 in² (0.2…2.5 mm²) - AWG 24...AWG 18 - flexible - with cable end IEC 60947-1
Tightening torque	3.10…3.5 lbf.in (0.35…0.4 N.m) IEC 60947-1 3.09…3.54 lbf.in (0.35…0.40 N.m) IEC 60947-1
Housing material	Self-extinguishing plastic
Status LED	1 LED Green power ON 1 LED Yellow communication network 5 LEDs Red function mode 1 LED green and yellow reception signal
Rated short-duration power frequency withstand voltage	1.5 kV 50 Hz IEC 60947-5-1
[Uimp] rated impulse withstand voltage	4 kV
Surge withstand	1 kV differential mode IEC 61000-4-5 2 kV common mode IEC 61000-4-5
Width	4.8 in (122 mm)
Height	3.5 in (90 mm)
Depth	2.4 in (60 mm)
Net Weight	0.60 lb(US) (0.27 kg)
Antenna gain	0 dBi
Integrated connection type	1 isolated serial link 2 x RJ45 in parallel Modbus Serial line slave Modbus slave RTU asynchronous in baseband RS485, half duplex, 1.2...115.2 kbauds, 2 twisted shielded pairs
Data storage equipment	SD card
Topology	Devices linked by daisy-chaining or tap junctions
Data format	7 or 8 bits, 1 or 2 stop bits
Parity	No Even Odd

Environment

Radio agreement	ANATEL, type III ETSI EN 301 489-3 FCC, category 2 ETSI EN 300 440-1 ICASA RSS, category 1 ETSI EN 300 440-1 SRRC
Product Certifications	GOST CE UL C-tick CSA CCC
Directives	2006/95/EC - low voltage directive 2004/108/EC - electromagnetic compatibility 1999/5/EC - R&TTE directive
Standards	CSA C22.2 No 14 IEC 62311 IEC 61131-2 ETSI EN 300 440-2 ETSI EN 300 328 IEC 60950-1 UL 508
Ambient Air Temperature for Storage	-40…158 °F (-40…70 °C)

Relative humidity	90 % -13…131 °F (-25…55 °C), without condensation ETSI EN 300 440-1
Operating altitude	0...6561.68 ft (0...2000 m)
Storage altitude	0…9842.5 ft (0…3000 m)
Vibration resistance	+/- 3.5 mm 5…14 Hz) IEC 60068-2-6 1 gn 5…150 Hz) on panel mounting IEC 60068-2-6 2 gn 8…150 Hz) on DIN rail IEC 60068-2-6
Shock resistance	10 gn 16 ms) 6000 shocks IEC 60068-2-27
IP degree of protection	IP20 IEC 60529 casing) IP20 terminals)
Pollution degree	2 IEC 60664-1
Electromagnetic compatibility	1.2/50 µs shock waves immunity test - test level: 1 kV (differential mode) conforming to IEC 61000-4-5 1.2/50 µs shock waves immunity test - test level: 2 kV (common mode) conforming to IEC 61000-4-5 Immunity to microbreaks and voltage drops - test level: 10 ms conforming to IEC 61000-4-11
Dielectric strength	3000 V between input and output AC 4250 V between input and output DC 1500 V between input and ground AC 2150 V between input and ground DC

Ordering and shipping details

Category	US1000I22470
Discount Schedule	000I
GTIN	3606480528491
Returnability	Yes
Country of origin	ID

Packing Units

Unit Type of Package 1	PCE
Nbr. of units in pkg.	1
Package 1 Height	2.874 in (7.300 cm)
Package 1 Width	3.780 in (9.600 cm)
Package 1 Length	5.118 in (13.000 cm)
Package weight(Lbs)	10.864 oz (308.000 g)
Unit Type of Package 2	S02
Number of Units in Package 2	10
Package 2 Height	5.906 in (15.000 cm)
Package 2 Width	11.811 in (30.000 cm)
Package 2 Length	15.748 in (40.000 cm)
Package 2 Weight	7.758 lb(US) (3.519 kg)

Contractual warranty

Warranty (in months)	18

Environmental Data

Schneider Electric aims to achieve Net Zero status by 2050 through supply chain partnerships, lower impact materials, and circularity via our ongoing “Use Better, Use Longer, Use Again” campaign to extend product lifetimes and recyclability.

Environmental Data explained >

How we assess product sustainability >

Environmental footprint

Carbon footprint (kg CO2 eq, Total Life cycle)	**34**

Use Better

Materials and Substances

Packaging made with recycled cardboard	**Yes**
Packaging without single use plastic	**Yes**
EU RoHS Directive	**Pro-active compliance (Product out of EU RoHS legal scope)**
SCIP Number	**25b7f895-3732-43c8-9910-ef6005058640**
REACh Regulation	**REACh Declaration**
California proposition 65	**WARNING: This product can expose you to chemicals including: Nickel compounds, which is known to the State of California to cause cancer, and Di-isodecyl phthalate (DIDP), which is known to the State of California to cause birth defects or other reproductive harm. For more information go to www.P65Warnings.ca.gov**

Use Again

Repack and remanufacture

Circularity Profile	**End of Life Information**
Take-back	**No**
WEEE Label	**The product must be disposed on European Union markets following specific waste collection and never end up in rubbish bins.**

Dimensions Drawings

Dimensions

For your information existing access point product is now named “Harmony Hub”

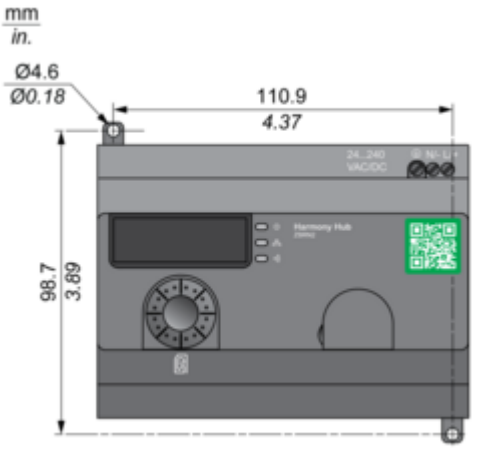

Mounting and Clearance

Harmony Hub on a Mounting Panel

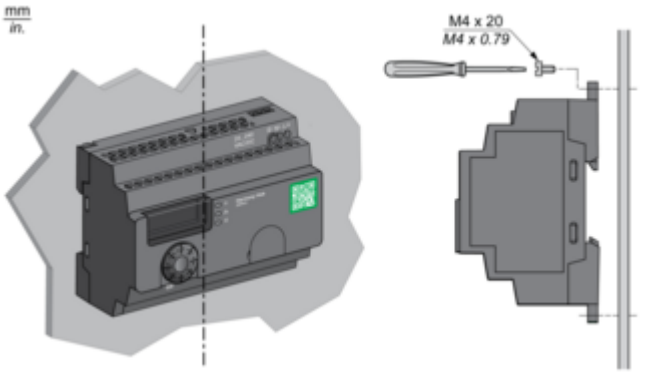

Harmony Hub is installed according to its vertical axis

Harmony Hub on DIN Rail Mounting

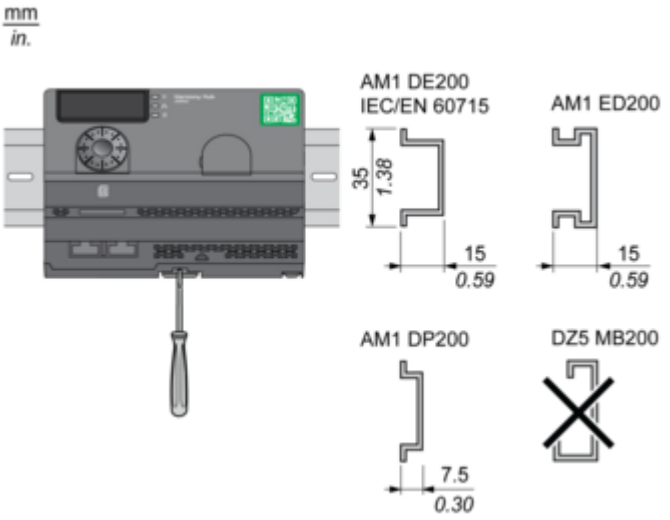

Clearances

Maximum Distance between Transmitter and Harmony Hub in Free Field Unobstructed

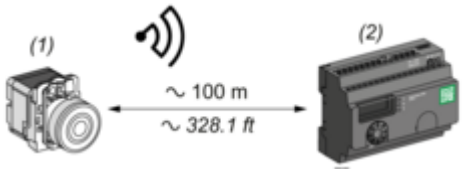

(1) Transmitter
(2) Harmony Hub

Maximum Distance between Transmitter and Harmony Hub in a Metal Enclosure with a Relay Antenna

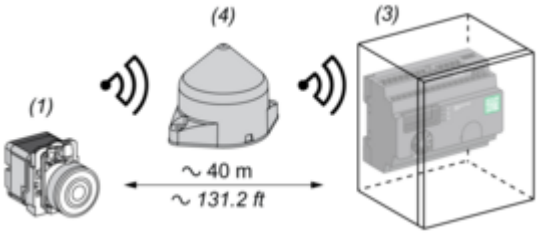

(1) Transmitter
(3) Harmony Hub in a metal enclosure
(4) Relay antenna

Maximum Distance between Transmitter and Harmony Hub in a Metal Enclosure with a Passive Antenna

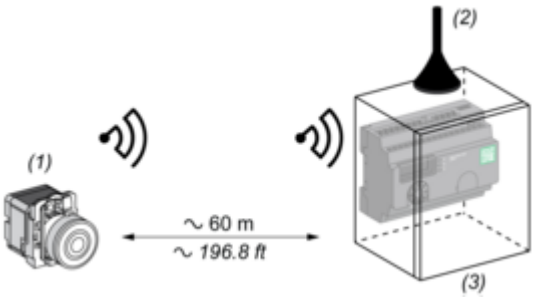

(1) Transmitter
(2) External antenna
(3) Harmony Hub in a metal enclosure
The range is reduced if the transmitter is placed in a metal enclosure (reduction factor : approx 10%)

Glass window	10...20 %
Plaster wall	30...45 %
Brick wall	60 %
Concrete wall	70...80 %
Metal structure	50...100 %

Harmony Hub Clearances

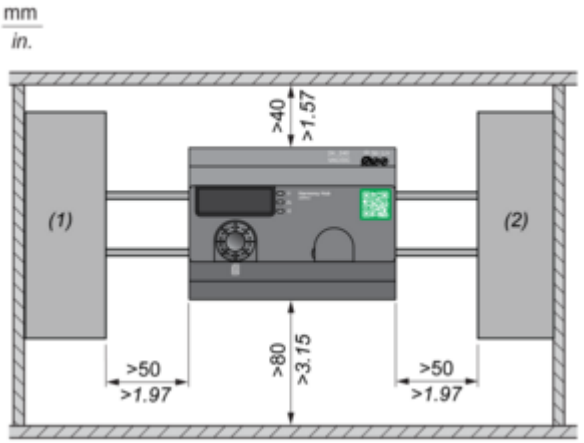

(1) PLC or other devices
(2) Power supply or other devices

Connections and Schema

Harmony Hub Wiring Diagram

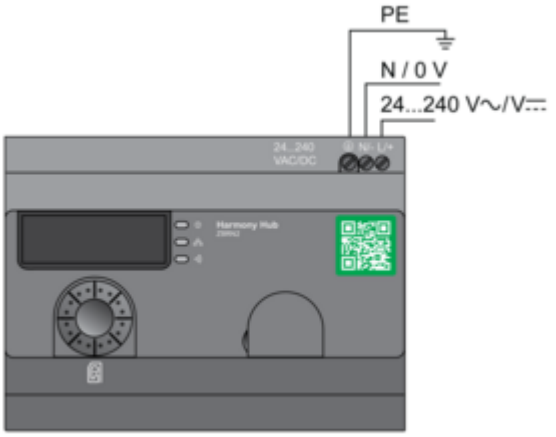

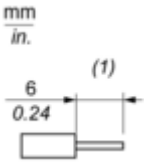

(1) Wire sizes for Power Supply terminals (L/+, N/-)

Technical Illustration

Dimensions

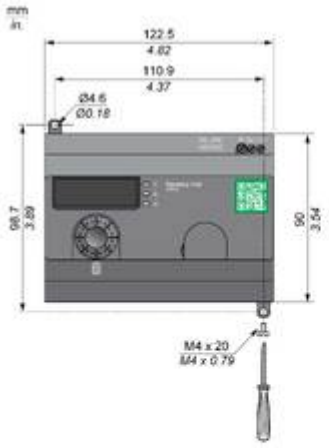

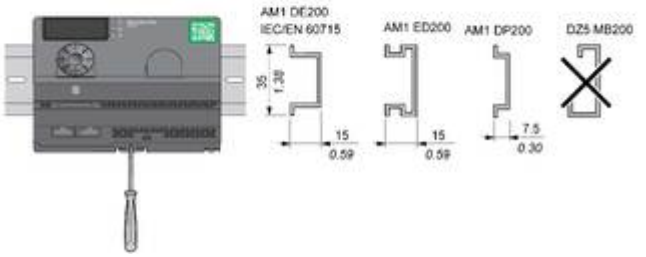

Technical Illustration

Wiring diagram

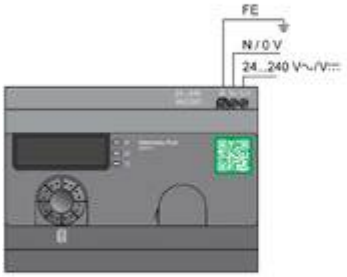

U+ N/–

mm / in.	0.24			
mm²	0.75	0.75...2.5	1...4	1...1.5
AWG	18	18...14	17...12	17...16

FE

mm / in.	0.24		
mm²	0.75...4	0.75...4	
AWG	18...12	18...12	

Ø 3.5 mm / 0.14 in.		N•m	0.35 ± 0.05
		lb-in	3.10 ± 0.44

Offer Marketing Illustration

Product benefits / Features

Offer Marketing Illustration

Product benefits / Features

Image of product in real life situation