Product data sheet

Specifications

Pilot light, Harmony 9001SK, plastic, polycarbonate, domed, green, 30mm, 24-28V

9001SKP35G9

Product availability: Non-Stock - Not normally stocked in distribution facility

Main

Range of Product	Harmony 9001SK
Product or Component Type	Pilot light
Device short name	9001SK
Lens type	Domed plastic
Light block supply	Direct 24 V AC/DC

Complementary

Bezel material	Plastic
Mounting diameter	1.2 in (30 mm)
Shape of signaling unit head	Round
Cap/operator or lens colour	Green
Light source	incandescent
Bulb base	BA 9s
[Us] rated supply voltage	24...28 V AC/DC
Tightening torque	7.08 lbf.in (0.8 N.m) EN/IEC 60947-1
Shape of screw head	Cross slotted
Connections - terminals	Screw clamp terminals, 1 x 0.22...2 x 1.5 mm² EN/IEC 60947-1
[Ith] conventional free air thermal current	10 A
Short-circuit protection	10 A cartridge fuse EN/IEC 60947-5-1
[Ui] rated insulation voltage	250 V 2)EN/IEC 60947-1
[Uimp] rated impulse withstand voltage	2.5 kV EN/IEC 60947-1
Operating position	Any position
CAD overall width	2.1 in (54 mm)
CAD overall height	2.8 in (70 mm)
CAD overall depth	1.7 in (42 mm)
Net Weight	0.181 lb(US) (0.082 kg)
Device presentation	Complete product
Lens type	Domed
[Us] rated supply voltage	24...28 V
Light block supply	Full voltage
Lens material	Polycarbonate

Price is “List Price” and may be subject to a trade discount – check with your local distributor or retailer for actual price.

Disclaimer: This documentation is not intended as a substitute for and is not to be used for determining suitability or reliability of these products for specific user applications

Size	30 mm
Light source	Incandescent bulb

Environment

Electrical shock protection class	Class II conforming to IEC 61140
Protective treatment	TC
IP degree of protection	IP66 IEC 60529
NEMA degree of protection	NEMA 1 NEMA 12 NEMA 13 NEMA 2 NEMA 3 NEMA 3R NEMA 4 NEMA 4X
Vibration resistance	7 gn (f= 2…500 Hz) conforming to IEC 60068-2-6
Shock resistance	50 gn IEC 60068-2-27
Ambient air temperature for operation	-13…158 °F (-25…70 °C)
Ambient Air Temperature for Storage	-40…158 °F (-40…70 °C)
Standards	EN/IEC 60947-1 EN/IEC 60947-5-4 JIS C 852 JIS C8201-5-1 UL 508 EN/IEC 60947-5-1 CSA C22.2 No 14 JIS C8201-1
Product Certifications	UL 508 NEMA

Ordering and shipping details

Category	US10CS121429
Discount Schedule	0CS1
GTIN	785901048381
Returnability	Yes
Country of origin	MX

Packing Units

Unit Type of Package 1	PCE
Nbr. of units in pkg.	1
Package 1 Height	1.9 in (4.9 cm)
Package 1 Width	2.3 in (5.9 cm)
Package 1 Length	3.701 in (9.401 cm)
Package weight(Lbs)	2.880 oz (81.647 g)

Contractual warranty

Warranty	18 months

Environmental Data

Schneider Electric aims to achieve Net Zero status by 2050 through supply chain partnerships, lower impact materials, and circularity via our ongoing “Use Better, Use Longer, Use Again” campaign to extend product lifetimes and recyclability.

Environmental Data explained >

How we assess product sustainability >

Environmental footprint

Environmental Disclosure	Product Environmental Profile

Use Better

Materials and Substances

Packaging made with recycled cardboard	Yes
Packaging without single use plastic	Yes
EU RoHS Directive	Pro-active compliance (Product out of EU RoHS legal scope)
REACh Regulation	REACh Declaration
California proposition 65	WARNING: This product can expose you to chemicals including: Lead and lead compounds, which is known to the State of California to cause cancer and birth defects or other reproductive harm. For more information go to www.P65Warnings.ca.gov

Use Again

Repack and remanufacture

Circularity Profile	End of Life Information
Take-back	No
WEEE Label	The product must be disposed on European Union markets following specific waste collection and never end up in rubbish bins.

Dimensions Drawings

Dimensions

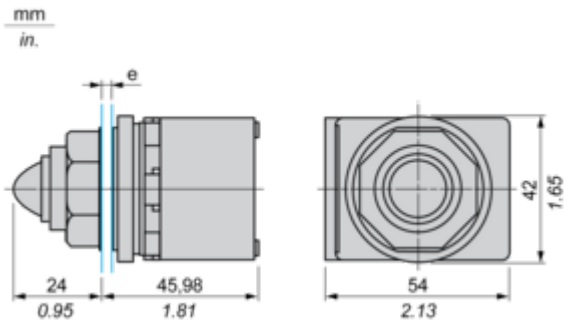

e panel thickness: 1 to 6 mm / 0.04 to 0.24 in.

Image of product / Alternate images

Alternative

9001 KM35
Schneider
MADE IN MEXICO