Product data sheet

Specifications

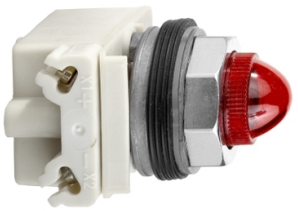

Pilot light, Harmony 9001K, metal, polycarbonate, domed, red, 30mm, 120V

9001KP38R9

Product availability: Non-Stock - Not normally stocked in distribution facility

Main

Range of Product	Harmony 9001K
Product or Component Type	Pilot light
Device short name	9001K

Complementary

Bezel material	Metal
Mounting diameter	1.2 in (30 mm)
Shape of signaling unit head	Round
Lens type	Domed plastic
Cap/operator or lens colour	Red
Light source	incandescent
Bulb base	BA 9s
Light block supply	Direct 120 V AC/DC
Connections - terminals	Screw clamp terminals, 1 x 0.22...2 x 1.5 mm² IEC 60947-1
Tightening torque	7.08 lbf.in (0.8 N.m) IEC 60947-1
shape of screw head	Cross slotted
Shape of screw head	Cross slotted
Operating position	Any position
[Ui] rated insulation voltage	250 V 2)IEC 60947-1
[Uimp] rated impulse withstand voltage	2.5 kV IEC 60947-1
Short-circuit protection	10 A cartridge fuse IEC 60947-5-1
Light source	Incandescent bulb
[Ith] conventional free air thermal current	10 A
CAD overall width	2.1 in (54 mm)
CAD overall height	2.8 in (70 mm)
CAD overall depth	1.7 in (42 mm)
[Us] rated supply voltage	120 V AC/DC
Net Weight	0.295 lb(US) (0.134 kg)
Device presentation	Complete product
Lens type	Domed
[Us] rated supply voltage	120 V

Price is “List Price” and may be subject to a trade discount – check with your local distributor or retailer for actual price.

Disclaimer: This documentation is not intended as a substitute for and is not to be used for determining suitability or reliability of these products for specific user applications

Light block supply	Full voltage or resistor
Lens material	Polycarbonate
Size	30 mm

Environment

Standards	JIS C8201-5-1 EN/IEC 60947-5-1 CSA C22.2 No 14 EN/IEC 60947-1 EN/IEC 60947-5-4 UL 508 JIS C 852 JIS C8201-1
Product Certifications	UL 508 NEMA
Protective treatment	TC
Ambient Air Temperature for Storage	-40…158 °F (-40…70 °C)
Ambient air temperature for operation	-13…158 °F (-25…70 °C)
Vibration resistance	7 gn (f= 2…500 Hz) conforming to IEC 60068-2-6
Shock resistance	50 gn IEC 60068-2-27
Overvoltage category	Class II conforming to IEC 61140
IP degree of protection	IP66 IEC 60529
NEMA degree of protection	NEMA 1 NEMA 12 NEMA 13 NEMA 2 NEMA 3 NEMA 3R NEMA 4 NEMA 6

Ordering and shipping details

Category	US10CS121426
Discount Schedule	0CS1
GTIN	785901794448
Returnability	Yes
Country of origin	MX

Packing Units

Unit Type of Package 1	PCE
Nbr. of units in pkg.	1
Package 1 Height	1.800 in (4.572 cm)
Package 1 Width	2.100 in (5.334 cm)
Package 1 Length	3.600 in (9.144 cm)
Package weight(Lbs)	4.960 oz (140.614 g)

Contractual warranty

Warranty	18 months

Environmental Data

Schneider Electric aims to achieve Net Zero status by 2050 through supply chain partnerships, lower impact materials, and circularity via our ongoing “Use Better, Use Longer, Use Again” campaign to extend product lifetimes and recyclability.

Environmental Data explained >

How we assess product sustainability >

Environmental footprint

Environmental Disclosure	Product Environmental Profile

Use Better

Materials and Substances

Packaging made with recycled cardboard	Yes
Packaging without single use plastic	Yes
EU RoHS Directive	Pro-active compliance (Product out of EU RoHS legal scope)
SCIP Number	Ae0c4eb9-0bfb-40a4-851f-5c619fbe777d
REACh Regulation	REACh Declaration
California proposition 65	WARNING: This product can expose you to chemicals including: Lead and lead compounds, which is known to the State of California to cause cancer and birth defects or other reproductive harm. For more information go to www.P65Warnings.ca.gov

Use Again

Repack and remanufacture

Circularity Profile	End of Life Information
Take-back	No
WEEE Label	The product must be disposed on European Union markets following specific waste collection and never end up in rubbish bins.

Dimensions Drawings

Dimensions

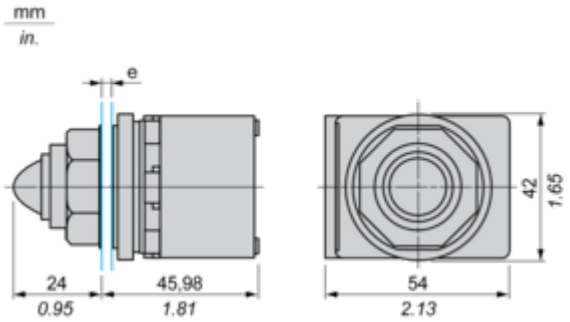

e panel thickness: 1 to 6 mm / 0.04 to 0.24 in.