Product data sheet

Specifications

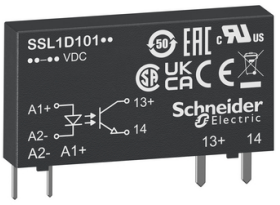

plug in relay, Harmony Solid State Slim Relays, 3.5A, DC switching, input 15 to 30V DC, output 1 to 24V DC

SSL1D03BD

Product availability: Stock - Normally stocked in distribution facility

Main

Range of Product	Harmony Solid State Relays
Device short name	SSL
Phase	1 phase
[Uc] control circuit voltage	15...30 V
Output switching mode	DC switching
Ui rated insulation voltage	30 V
Insulation resistance	> 100 MOhm 500 V DC
Electromagnetic compatibility	Electrostatic discharge - test level: 4 kV criteria B (contact discharge) conforming to IEC 61000-4-2 Electrostatic discharge - test level: 8 kV criteria B (air discharge) conforming to IEC 61000-4-2 Conducted RF disturbances - test level: 10 V criteria A (0.15...80 MHz) conforming to IEC 61000-4-6 Radiated radio-frequency electromagnetic field immunity test - test level: 10 V/m criteria A (80 MHz to 1 GHz) conforming to IEC 61000-4-3 Radiated radio-frequency electromagnetic field immunity test - test level: 3 V/m criteria A (1.4…6 GHz) conforming to IEC 61000-4-3 Electrical fast transient/burst immunity test - test level: 2 kV criteria B (5 kHz) conforming to IEC 61000-4-4 Electrical fast transient/burst immunity test - test level: 1 kV criteria B (5 kHz) conforming to IEC 61000-4-4 Surge immunity test - test level: 0.5 kV criteria B (line to line) conforming to IEC 61000-4-5 Surge immunity test - test level: 1 kV criteria B (line to earth) conforming to IEC 61000-4-5 Radiated emission - test level: 30...1000 Mhz conforming to IEC 60947-1 Conducted emission - test level: 0.15...30 Mhz conforming to IEC 60947-1
[Uimp] rated impulse withstand voltage	3.5 kV for input to case IEC 62314 3.5 kV for input/output circuit UL 508 3.5 kV for input/output circuit IEC 62314 3.5 kV output to case IEC 62314 3.5 kV output to case 3.5 kV for input to case UL 508 3.5 kV output to case UL 508

Complementary

Mounting Support	Socket
Line Rated Current	3.5 A
Output voltage	3...30 V DC
[Uc] control circuit voltage	15...30 V DC
Capacitance unbalance	2.5 pF input/output
Minimum switching voltage	15 V DC turn-on

Price is “List Price” and may be subject to a trade discount – check with your local distributor or retailer for actual price.

Disclaimer: This documentation is not intended as a substitute for and is not to be used for determining suitability or reliability of these products for specific user applications

Maximum switching voltage	10 V DC turn-off
Input current	7 mA
Input impedance	3500 Ohm
Solid state output type	Mosfet output DC switching
Load current	0.001…3.5 A
Transient Overvoltage	35 V
Maximum operating frequency	500 Hz
Surge current	9 A 10 ms
Maximum voltage drop	<0.5 V on-state
Maximum leakage current	0.001 mA off-state
Response time	0.2 ms (turn-on) 0.1 ms (turn-off)
Overvoltage category	III
Width	0.2 in (5 mm)
Height	1.1 in (28 mm)
Depth	0.6 in (15 mm)
Net Weight	0.0090 lb(US) (0.0041 kg)
Device presentation	Complete product

Environment

Flame retardance	V0 conforming to UL 94
Dielectric strength	2500 V for input/output
Pollution degree	2
Standards	IEC/EN 60947-1 IEC/EN 62314 UL 508 C22.2 No. 14
Product Certifications	cURus CSA EAC CE UKCA
Marking	CE
IP degree of protection	IP00
Ambient Air Temperature for Operation	-4…176 °F (-20…80 °C)
Ambient Air Temperature for Storage	-4…185 °F (-20…85 °C)

Ordering and shipping details

Category	US10CP222375
Discount Schedule	0CP2
GTIN	3606480579653
Returnability	Yes
Country of origin	CN

Packing Units

Unit Type of Package 1	PCE
Nbr. of units in pkg.	1
Package 1 Height	0.6 in (1.5 cm)
Package 1 Width	0.2 in (0.5 cm)
Package 1 Length	1.1 in (2.8 cm)
Package weight(Lbs)	0.13 oz (3.67 g)
Unit Type of Package 2	BB1
Number of Units in Package 2	10
Package 2 Height	1.2 in (3.1 cm)
Package 2 Width	1.9 in (4.8 cm)
Package 2 Length	4.9 in (12.4 cm)
Package 2 Weight	1.9 oz (55 g)
Unit Type of Package 3	S01
Number of Units in Package 3	280
Package 3 Height	5.9 in (15 cm)
Package 3 Width	5.9 in (15 cm)
Package 3 Length	15.7 in (40 cm)
Package 3 Weight	3.9106 lb(US) (1.7738 kg)

Contractual warranty

Warranty (in months)	18

Environmental Data

Schneider Electric aims to achieve Net Zero status by 2050 through supply chain partnerships, lower impact materials, and circularity via our ongoing “Use Better, Use Longer, Use Again” campaign to extend product lifetimes and recyclability.

Environmental Data explained >

How we assess product sustainability >

Environmental footprint

Carbon footprint (kg CO2 eq, Total Life cycle)	17
Environmental Disclosure	Product Environmental Profile

Use Better

Materials and Substances

Packaging made with recycled cardboard	Yes
Packaging without single use plastic	No
EU RoHS Directive	Pro-active compliance (Product out of EU RoHS legal scope)
REACh Regulation	REACh Declaration
California proposition 65	WARNING: This product can expose you to chemicals including: Lead and lead compounds, which is known to the State of California to cause cancer and birth defects or other reproductive harm. For more information go to www.P65Warnings.ca.gov

Use Again

Repack and remanufacture

Circularity Profile	No need of specific recycling operations
Take-back	No

Dimensions Drawings

Dimensions

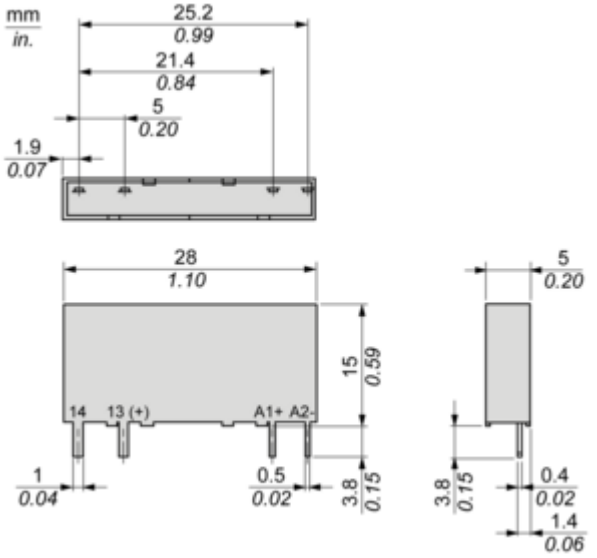

Mounting and Clearance

Mounting

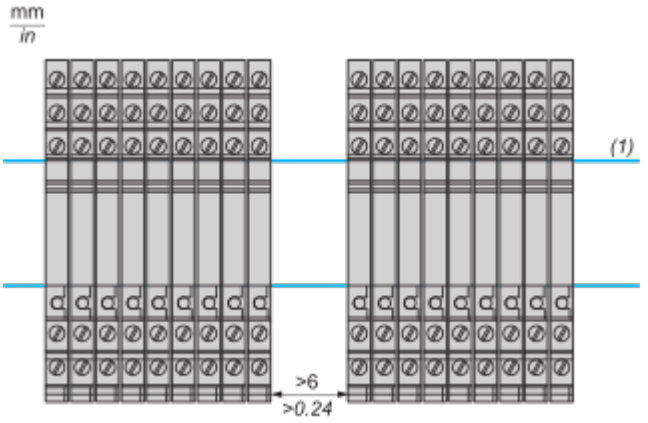

(1) : DIN Rail Mount

Performance Curves

Derating Curves

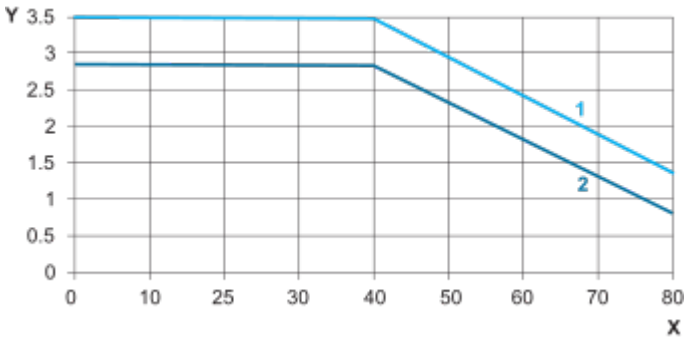

X : Ambient Temperature (°C)
Y : Load Current (Amperes)
1 : Installed single unit, distance to adjacent components more than 6.2 mm
2 : Multiple units, no minimum spacing between components

Connections and Schema

Wiring

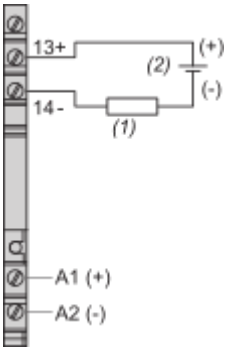

(1) Load
(2) DC Source

Technical Illustration

Dimensions

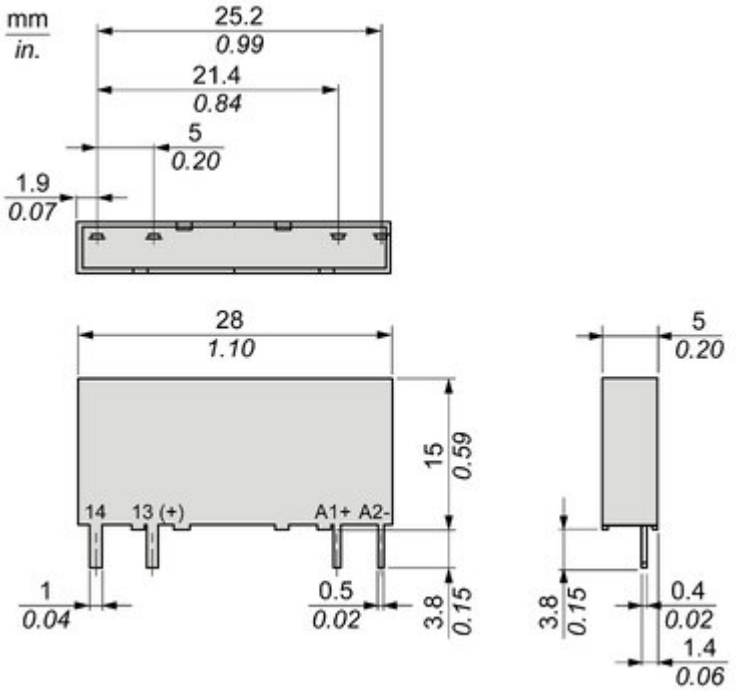

Image of product / Alternate images

Alternative

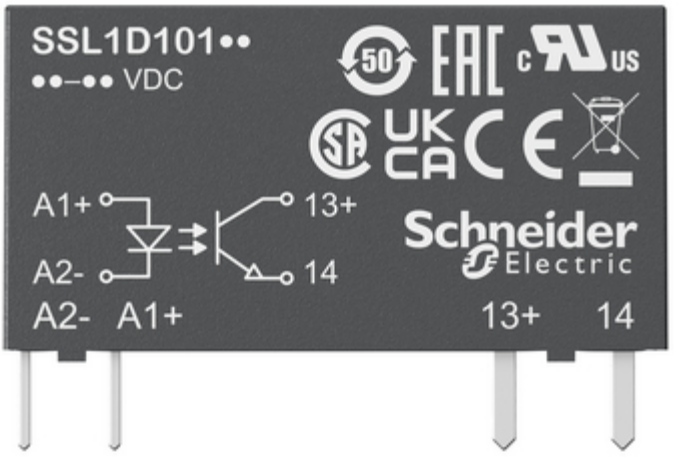
SSL1D101••
••–•• VDC
A1+
A2-
13+
14
Schneider
Electric
A2- A1+
13+ 14