Product data sheet

Specifications

interface plug in relay, Harmony Electromechanical Relays, 5A, 2CO, with LED, lockable test but to n, 24V DC

RXG22BD

Product availability: Stock - Normally stocked in distribution facility

Main

Range of Product	Harmony Electromechanical Relays
Series name	RXG series
Product or Component Type	Plug-in relay
Relay Type	Interface relay
Contacts type and composition	2 C/O
[Uc] control circuit voltage	24 V DC
[Ithe] conventional enclosed thermal current	5 A -40…131 °F (-40…55 °C)
Local signalling	Flag

Complementary

Status LED	With
Electrical durability	100000 cycles NO resistive at 55 °C 100000 cycles NC resistive at 55 °C
[Ui] rated insulation voltage	250 V IEC 300 V CSA 300 V UL
Removable legend	With
Maximum switching voltage	250 V AC 30 V DC
Drop-out voltage threshold	>= 0.1 Uc DC
[Ie] rated operational current	10 A at 30 V (DC) conforming to UL 10 A at 30 V (DC) conforming to IEC 10 A at 250 V (AC) conforming to UL 10 A at 250 V (AC) conforming to IEC
Load current	5 A 250 V AC
Minimum switching capacity	50 mW at 10 mA, 5 V DC
Maximum switching capacity	1250 VA
Control Type	Lockable test button
Contact resistance	100 mOhm
Insulation resistance	1000 MOhm at 500 V DC
Electrical Insulation Class	Class F
Mechanical durability	10000000 cycles
Safety reliability data	B10d = 100000

Price is “List Price” and may be subject to a trade discount – check with your local distributor or retailer for actual price.

Disclaimer: This documentation is not intended as a substitute for and is not to be used for determining suitability or reliability of these products for specific user applications

Operating rate	<= 1800 cycles/hour under load <= 18000 cycles/hour no-load
Utilisation coefficient	20 %
Operating time	20 ms
reset time	20 ms
Dielectric strength	1000 V AC between contacts with micro disconnection 5000 V AC between coil and contact with reinforced insulation 3000 V AC between poles with basic insulation
[Uimp] rated impulse withstand voltage	1200 V AC between contacts with micro disconnection 6000 V between coil and contact with reinforced insulation 1500 V between terminals and case with basic insulation
Overvoltage category	III
Protection category	RT I
Pollution degree	2
Test levels	Level A group mounting
Device presentation	Complete product
Contacts material	Silver alloy (AgSnO2In2O3)
Shape of pin	Flat (faston type)
Net Weight	0.04 lb(US) (0.02 kg)

Environment

Standards	CSA C22.2 No 14 UL 508 IEC 61810-1
Product Certifications	CSA CE EAC UL DNV
Ambient Air Temperature for Storage	-40…185 °F (-40…85 °C)
Ambient air temperature for operation	-40…158 °F (-40…70 °C)
IP Degree of Protection	IP40
Relative humidity	10…85 %
Vibration resistance	3 gn +/- 0.75 mm 10…150 Hz)in operation 5 gn +/- 0.75 mm 10…150 Hz)not in operation

Ordering and shipping details

Category	US10CP221127
Discount Schedule	0CP2
GTIN	3606480689178
Returnability	Yes
Country of origin	CN

Packing Units

Unit Type of Package 1	PCE
Nbr. of units in pkg.	1
Package 1 Height	0.472 in (1.200 cm)

Package 1 Width	1.181 in (3.000 cm)
Package 1 Length	1.535 in (3.900 cm)
Package weight(Lbs)	0.705 oz (20.000 g)
Unit Type of Package 2	BB1
Number of Units in Package 2	10
Package 2 Height	1.378 in (3.500 cm)
Package 2 Width	3.228 in (8.200 cm)
Package 2 Length	3.622 in (9.200 cm)
Package 2 Weight	8.113 oz (230.000 g)
Unit Type of Package 3	S02
Number of Units in Package 3	380
Package 3 Height	5.906 in (15.000 cm)
Package 3 Width	11.811 in (30.000 cm)
Package 3 Length	15.748 in (40.000 cm)
Package 3 Weight	19.553 lb(US) (8.869 kg)

Environmental Data

Schneider Electric aims to achieve Net Zero status by 2050 through supply chain partnerships, lower impact materials, and circularity via our ongoing “Use Better, Use Longer, Use Again” campaign to extend product lifetimes and recyclability.

Environmental Data explained

How we assess product sustainability

Environmental footprint

Carbon footprint (kg CO2 eq, Total Life cycle)	7
Environmental Disclosure	Product Environmental Profile

Use Better

Materials and Substances

Packaging made with recycled cardboard	Yes
Packaging without single use plastic	Yes
EU RoHS Directive	Pro-active compliance (Product out of EU RoHS legal scope)
REACh Regulation	REACh Declaration
California proposition 65	WARNING: This product can expose you to chemicals including: Nickel compounds, which is known to the State of California to cause cancer, and Di-isodecyl phthalate (DIDP), which is known to the State of California to cause birth defects or other reproductive harm. For more information go to www.P65Warnings.ca.gov

Use Again

Repack and remanufacture

Recyclability potential, in %	70
Circularity Profile	End of Life Information
Take-back	No

Dimensions Drawings

Dimensions

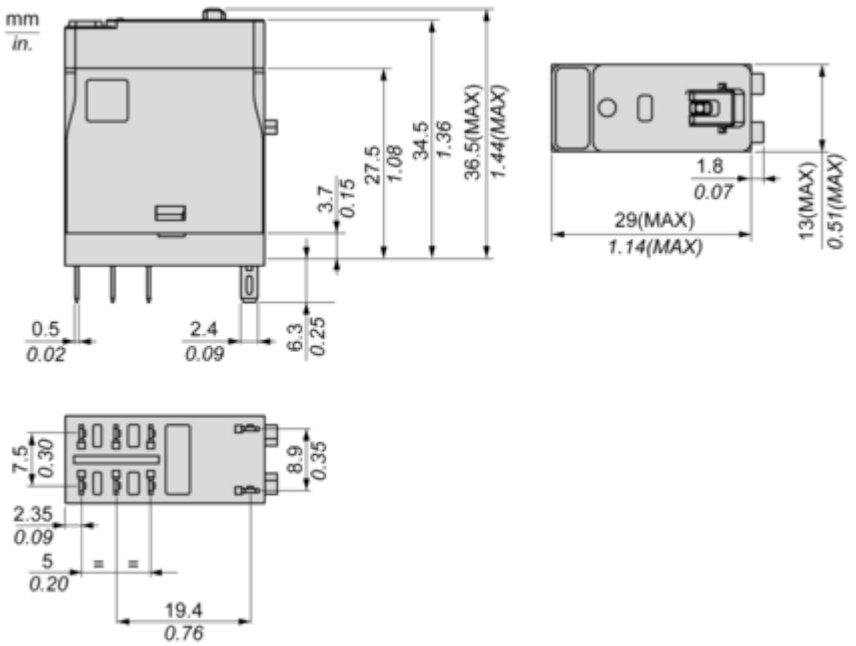

Connections and Schema

Wiring Diagram

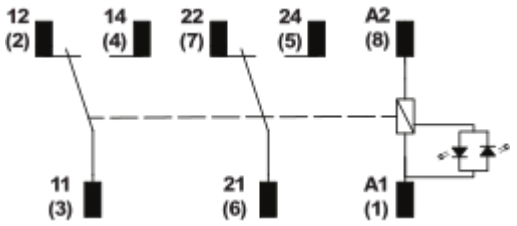

Performance Curves

Performance Curves

Maximum Switching Capacity

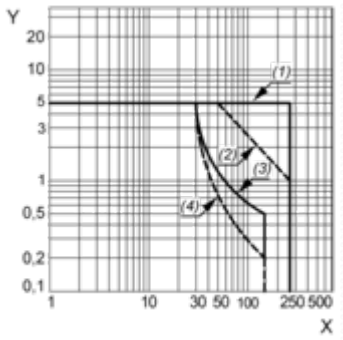

X : Switching voltage (V)
Y : Switching current (A)
(1) AC Resistive Load
(2) AC Inductive Load cos(Ø)=0.4
(3) DC Resistive Load
(4) DC Inductive Load (L/R=7ms)

Life Expectancy

Resistive Load

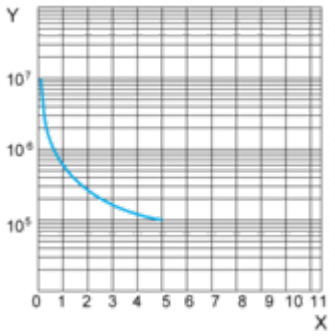

X : Contact Current (A)
Y : Operating Cycle Number

Life Expectancy

Inductive Load

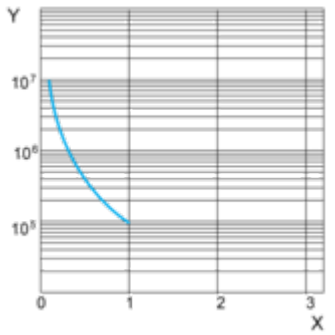

X : Contact Current (A)
Y : Operating Cycle Number

NOTE: These are typical curves, actual durability depends on load, environment, duty cycle, etc.

Coil Operating Range

DC Coil Operating Range VS Ambient Temperature

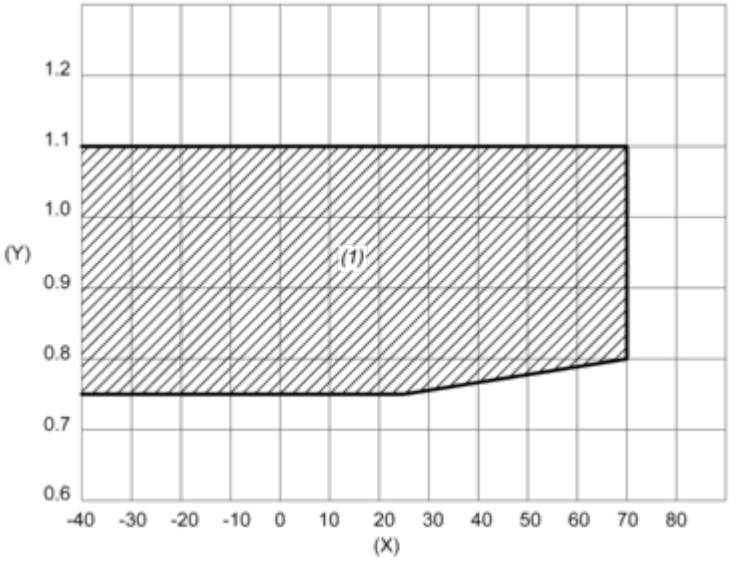

X : Ambient temperature (°C)
Y : Coil voltage (U/Uc)
(1) Permitted operating range area

Technical Illustration

Dimensions

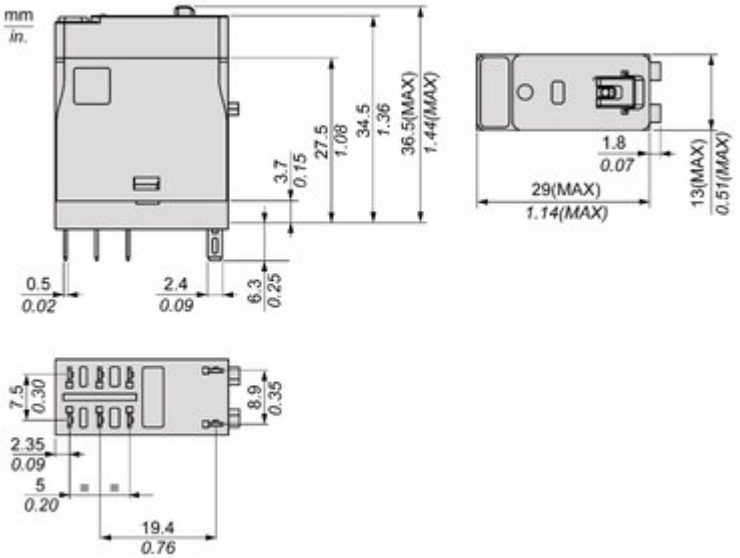

Offer Marketing Illustration

Product benefits / Features

Offer Marketing Illustration

Product benefits / Features

Image of product / Alternate images

Alternative

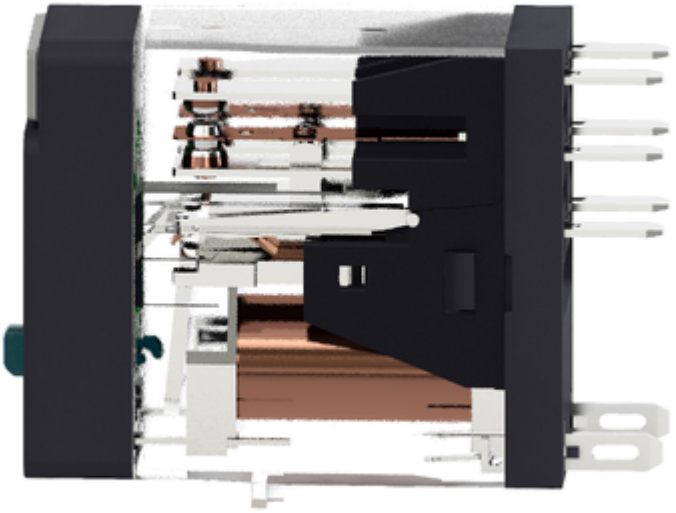

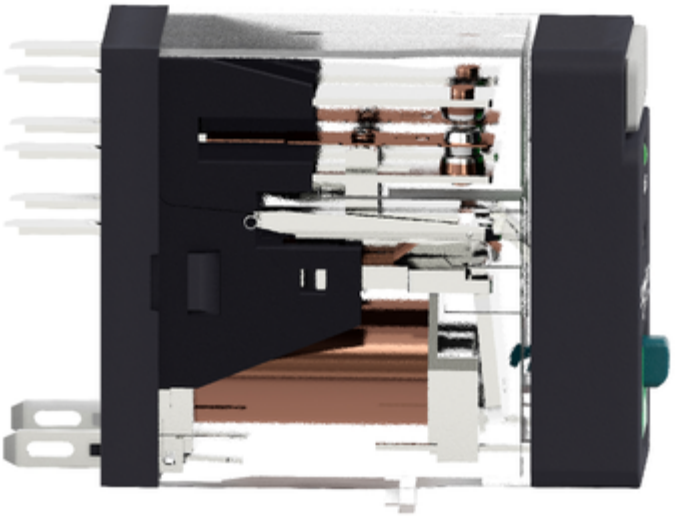

RXG
Schneider
Electric

Image of product in real life situation