Product data sheet

Specifications

advanced touchscreen panel, Harmony GTO, 320 x 240pixels QVGA, 5.7inch TFT, 96MB

HMIGTO2310

Product availability: Stock - Normally stocked in distribution facility

Main

Range of Product	Harmony GTO
Product or Component Type	Advanced touchscreen panel
Display colour	65536 colours
Display size	5.7 inch
Supply	External source
Battery type	Lithium internal RAM 100 days 5 day(s) 10 year(s)
Processor name	ARM926EJ-S
Software package	Vijeo Designer

Complementary

Terminal type	Touchscreen display
Display Type	Backlit colour TFT LCD
Display Resolution	320 x 240 pixels QVGA
Touch sensitive zone	1024 x 1024
Touch panel	Resistive film, 1000000 cycles
Backlight lifespan	50000 hours white 77 °F (25 °C)
Brightness	16 levels by touch panel 16 levels by software
Character font	Korean Taiwanese (traditional Chinese) ASCII (European characters) Chinese (simplified Chinese) Japanese (ANK, Kanji)
[Us] rated supply voltage	24 V DC
Supply voltage limits	19.2…28.8 V
Inrush current	30 A
Maximum power consumption in W	6.5 W when power is not supplied to external devices 4.5 W when backlight is OFF 5 W when backlight is dimmed 10.5 W
Local signalling	Status LED green, steady offline Status LED green, steady operating Status LED orange, flashing software starting up Status LED red, steady power supply (ON) Status LED clear, faded power supply (OFF) COM2 LED yellow, steady data is being transmitted COM2 LED yellow, faded no data transmission SD card LED green, steady card is inserted SD card LED green, faded card is not inserted or is not being accessed

Price is “List Price” and may be subject to a trade discount – check with your local distributor or retailer for actual price.

Disclaimer: This documentation is not intended as a substitute for and is not to be used for determining suitability or reliability of these products for specific user applications

Memory description	Flash EPROM, 96 MB
Data backed up	512 KB internal RAM SRAM)
Data storage equipment	SD card, <= 32 GB SDHC card, <= 32 GB
Downloadable protocols	Schneider Electric Modicon Modbus Schneider Electric Modicon Uni-TE Schneider Electric Modicon Modbus Plus Schneider Electric Modicon FIPWAY Mitsubishi Melsec third party protocols Omron Sysmac third party protocols Rockwell Automation Allen-Bradley third party protocols Siemens Simatic third party protocols Schneider Electric Modicon Modbus TCP
Integrated connection type	COM1 serial link SUB-D 9 RS232C 2400...115200 bps COM2 serial link RJ45 RS485 2400...115200 bps COM2 serial link RJ45 RS485 187.5 kbps Siemens MPI Ethernet RJ45 10BASE-T/100BASE-TX Ethernet RJ45 IEEE 802.3 USB 2.0 type A USB 2.0 type mini B
Product mounting	Flush mounting
Fixing mode	by 4 screw clamps
Front material	PPT
Enclosure Material	PPT
Type of cooling	Natural convection
Width	6.7 in (169.5 mm)
Height	5.4 in (137 mm)
Depth	2.3 in (59.5 mm)
Net Weight	1.8 lb(US) (0.8 kg)

Environment

Standards	IEC 61000-6-2 UL 508 IEC 61131-2
Product Certifications	cULus C-tick CE KCC UKCA UKEX
Ambient air temperature for operation	32…131 °F (0…55 °C)
Ambient air temperature for storage	-4…140 °F (-20…60 °C)
Relative humidity	10…90 % without condensation
Operating altitude	< 6561.68 ft (2000 m)
IP degree of protection	IP20 IEC 60529 rear panel) IP65 IEC 60529 front panel)
NEMA degree of protection	NEMA 4X front panel (indoor use)
Shock resistance	147 m/s² 3 chocks in each direction X, Y and Z IEC 61131-2
Vibration resistance	3.5 mm 5…9 Hz) - X, Y, Z directions for 10 cycles (approx. 100 min) - IEC 61131-2 1 gn 9…150 Hz) - X, Y, Z directions for 10 cycles (approx. 100 min) - IEC 61131-2
Resistance to electrostatic discharge	6 kV contact discharge IEC 61000-4-2 level 3

Ordering and shipping details

Category	US10MC222569
Discount Schedule	0MC2
GTIN	3595864150246
Returnability	Yes
Country of origin	ID

Packing Units

Unit Type of Package 1	PCE
Nbr. of units in pkg.	1
Package 1 Height	5.709 in (14.500 cm)
Package 1 Width	7.283 in (18.500 cm)
Package 1 Length	9.252 in (23.500 cm)
Package weight(Lbs)	2.326 lb(US) (1.055 kg)
Unit Type of Package 2	S03
Number of Units in Package 2	4
Package 2 Height	11.811 in (30.000 cm)
Package 2 Width	11.811 in (30.000 cm)
Package 2 Length	15.748 in (40.000 cm)
Package 2 Weight	11.023 lb(US) (5.000 kg)
Unit Type of Package 3	P12
Number of Units in Package 3	64
Package 3 Height	41.339 in (105.000 cm)
Package 3 Width	31.496 in (80.000 cm)
Package 3 Length	47.244 in (120.000 cm)
Package 3 Weight	220.462 lb(US) (100.000 kg)

Contractual warranty

Warranty	18 months

Environmental Data

Schneider Electric aims to achieve Net Zero status by 2050 through supply chain partnerships, lower impact materials, and circularity via our ongoing “Use Better, Use Longer, Use Again” campaign to extend product lifetimes and recyclability.

Environmental Data explained >

How we assess product sustainability >

Environmental footprint

Carbon footprint (kg CO2 eq, Total Life cycle)	515
Environmental Disclosure	Product Environmental Profile

Use Better

Materials and Substances

F-gas usage performance	Only air and vacuum used for insulation / breaking, no F-gas including SF6
Packaging made with recycled cardboard	Yes
Packaging without single use plastic	No
EU RoHS Directive	Pro-active compliance (Product out of EU RoHS legal scope)
SCIP Number	76565be4-97e1-4441-9623-82d029ddb7ce
REACh Regulation	REACh Declaration
California proposition 65	WARNING: This product can expose you to chemicals including: Lead and lead compounds, which is known to the State of California to cause cancer and birth defects or other reproductive harm. For more information go to www.P65Warnings.ca.gov
Halogen content performance	Product contains halogen above thresholds
PVC free	No
Silicon free	No

Use Again

Repack and remanufacture

Recyclability potential, in %	25
Circularity Profile	End of Life Information
Removable battery	User replaceable
Take-back	No
WEEE Label	The product must be disposed on European Union markets following specific waste collection and never end up in rubbish bins.

Dimensions Drawings

Dimensions

External Dimensions

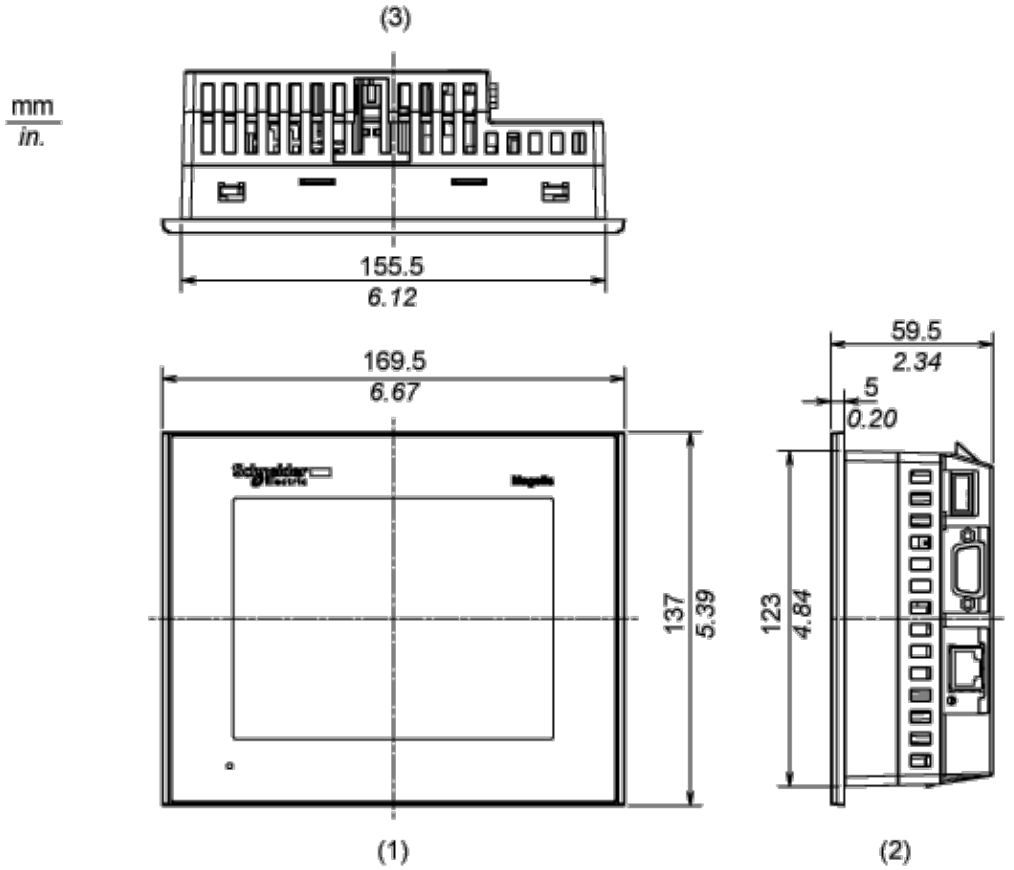

1 Front

2 Right Side

3 Top

Installation with Installation Fasteners

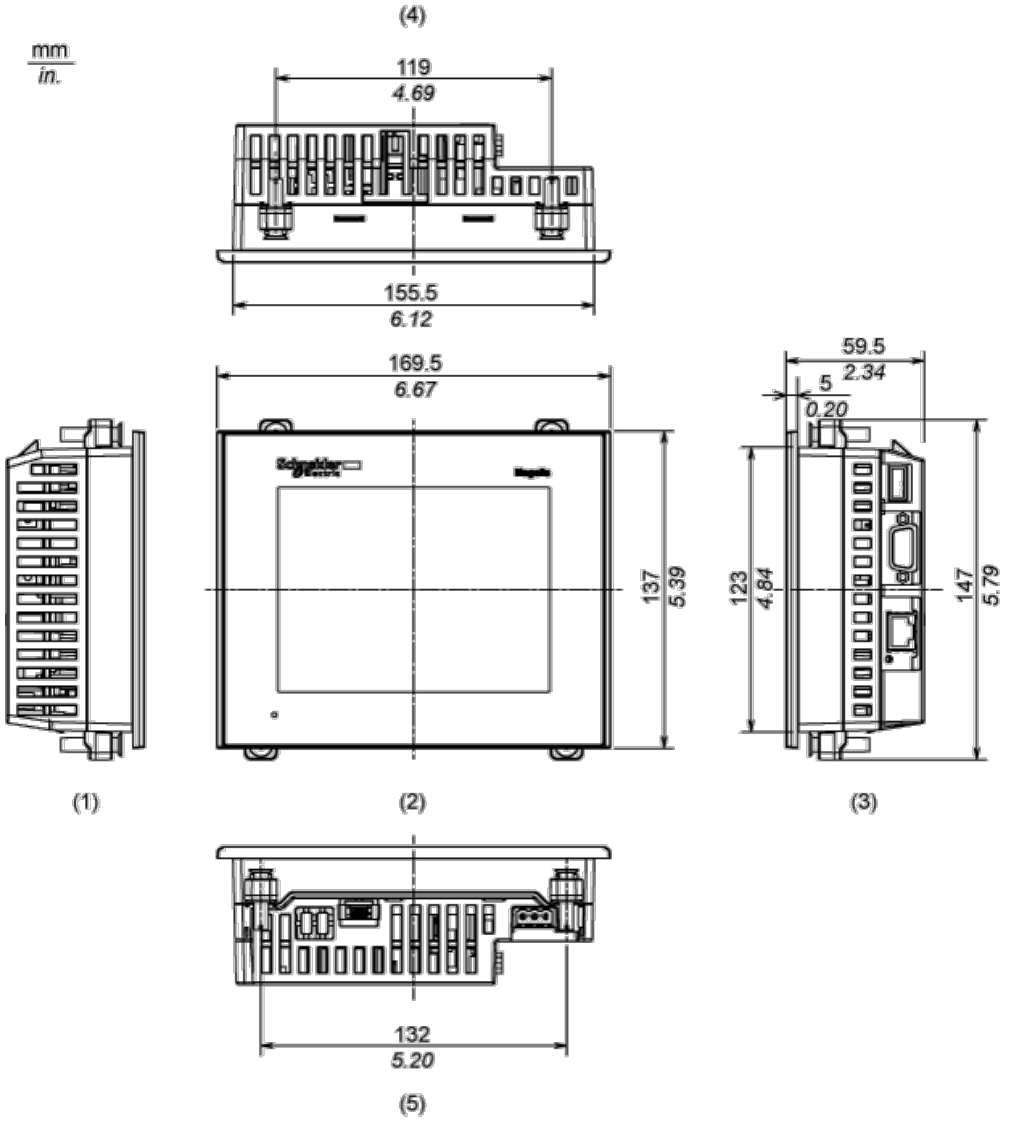

1 Left Side

2 Front

3 Right Side

4 Top

5 Bottom

Dimensions with Cables

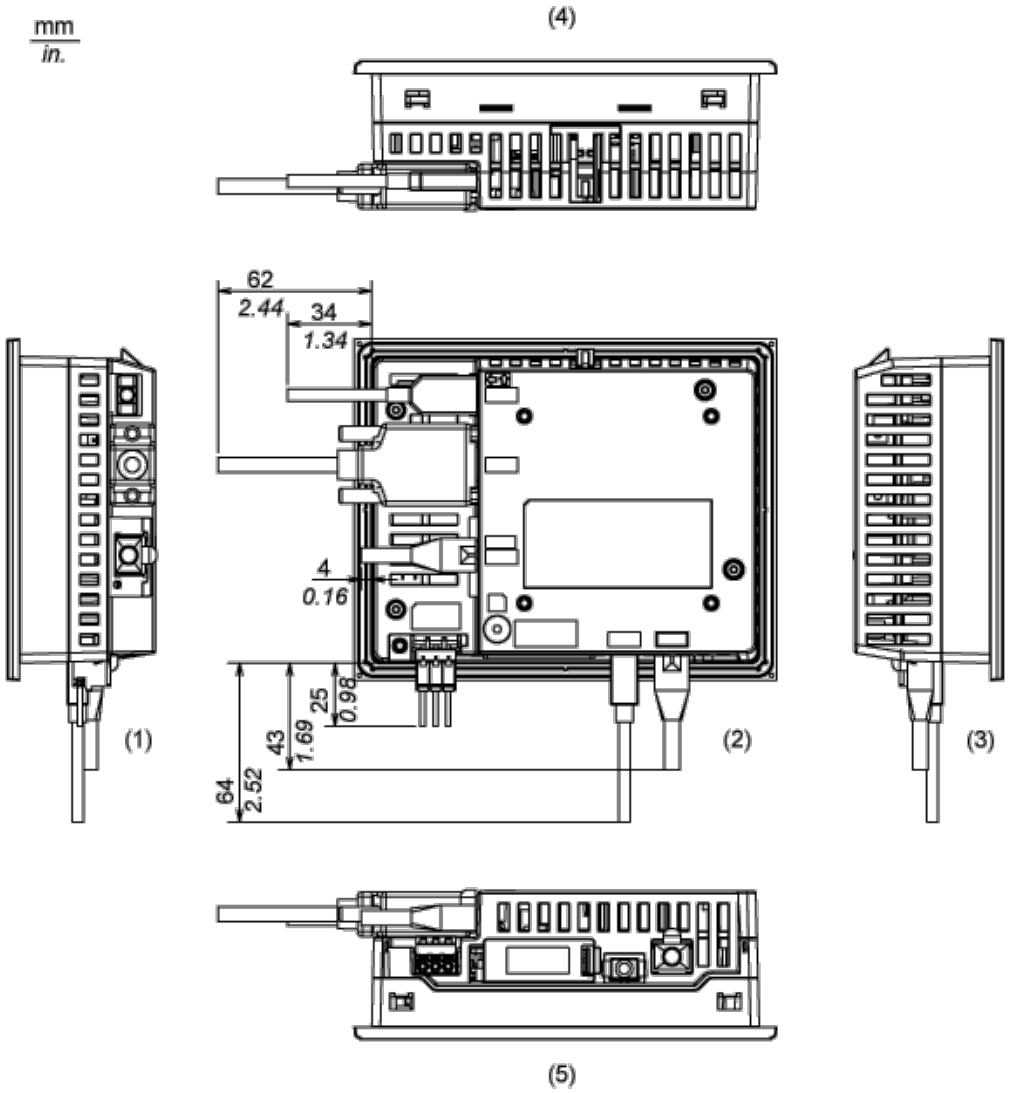

1 Left Side

2 Rear

3 Right Side

4 Top

5 Bottom

Mounting and Clearance

Mounting

Panel Cut Dimensions

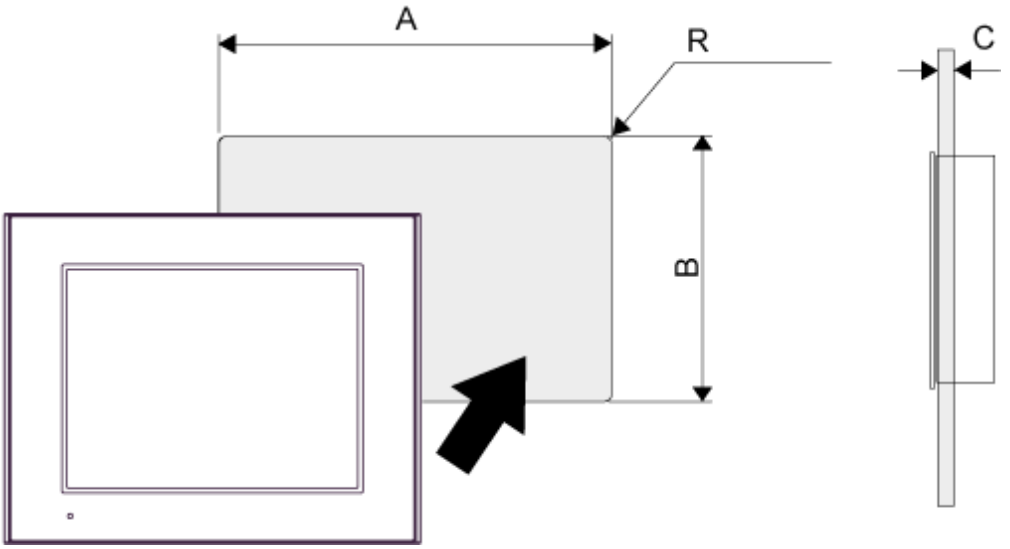

A		B		C		R	
mm	in.	mm	in.	mm	in.	mm	in.
156 (+1, -0)	6.14 (+0.04, -0)	123.5 (+1, -0)	4.86 (+0.04, -0)	1.6...5	0.06...0.2	3 max.	0.12 max.

Installation Fastener Dimensions

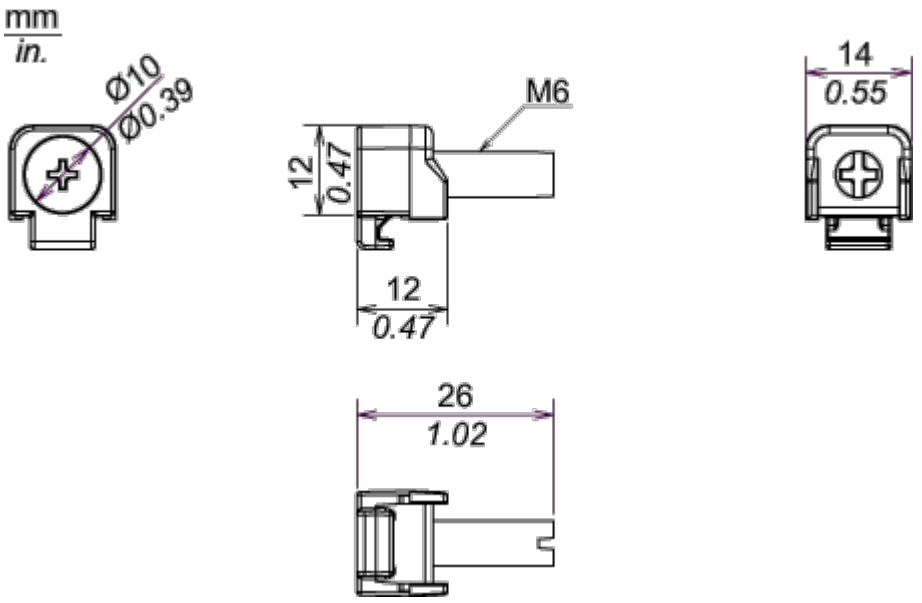

Installation Requirements

Mounting Angle

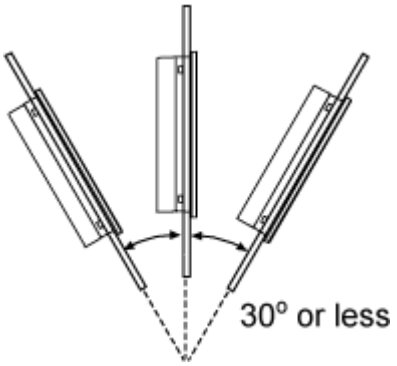

When installing the panel in a slanted position with an incline more than 30°, the ambient temperature must not exceed 40 °C (104 °F). You may need to use forced air cooling (fan,A/C) to ensure the ambient operating temperature is 40°C or less (104 °F or less).

Clearance

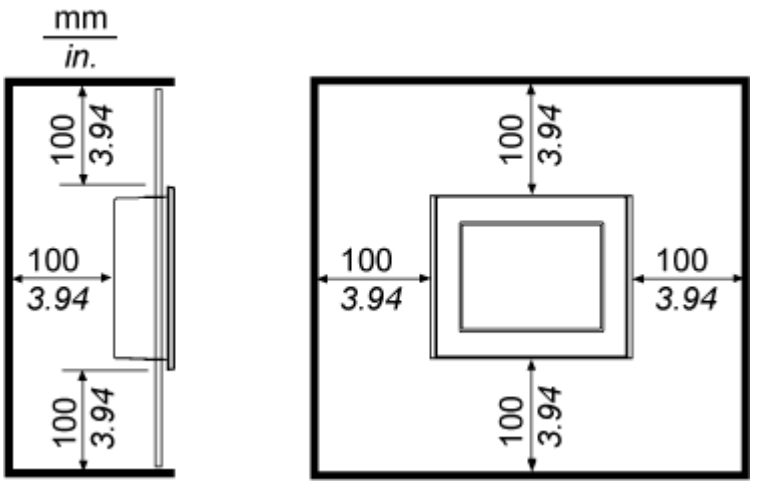

Image of product / Alternate images

Alternative

Schneider Electric
Magelis

USB1
COM1
RS485
COM2
USB2