Product data sheet

Specifications

Head for non illuminated push button, Harmony XB6, blue flush pushbutton 16mm spring return unmarked

ZB6AA6

Product availability: Non-Stock - Not normally stocked in distribution facility

Main

Range of Product	Harmony XB6
Product or Component Type	Head for non-illuminated push-button
Device short name	ZB6
Bezel material	Plastic
Mounting diameter	0.6 in (16 mm)
Sale per indivisible quantity	1
Shape of signaling unit head	Round
Type of operator	spring return
Operator profile	Blue flush, unmarked

Complementary

CAD overall width	0.7 in (18 mm)
CAD overall height	0.7 in (18 mm)
CAD overall depth	1.3 in (33 mm)
Net Weight	0.035 lb(US) (0.016 kg)

Environment

Protective treatment	TC
Ambient Air Temperature for Storage	-40…158 °F (-40…70 °C)
Ambient air temperature for operation	-13…158 °F (-25…70 °C)
Electrical shock protection class	Class II conforming to IEC 61140
IP degree of protection	IP65 IEC 60529
NEMA degree of protection	NEMA 13 UL 50 NEMA 4 UL 50 NEMA 4X UL 50 NEMA 13 CSA C22.2 No 94 NEMA 4 CSA C22.2 No 94 NEMA 4X CSA C22.2 No 94
Standards	CSA C22.2 No 14 IEC 60947-5-1 JIS C 852 IEC 60947-1 UL 508 IEC 60947-5-5 JIS C8201-5-1 JIS C8201-1

Price is “List Price” and may be subject to a trade discount – check with your local distributor or retailer for actual price.

Disclaimer: This documentation is not intended as a substitute for and is not to be used for determining suitability or reliability of these products for specific user applications

Product Certifications	GOST UL CSA CCC
Vibration resistance	+/- 3 mm (f= 2…500 Hz) conforming to IEC 60068-2-6 5 gn (f= 2…500 Hz) conforming to IEC 60068-2-6
Shock resistance	30 gn 18 ms) half sine wave acceleration IEC 60068-2-27 50 gn 11 ms) half sine wave acceleration IEC 60068-2-27

Ordering and shipping details

Category	US10CS222459
Discount Schedule	0CS2
GTIN	3389110288209
Returnability	Yes
Country of origin	FR

Packing Units

Unit Type of Package 1	PCE
Nbr. of units in pkg.	1
Package 1 Height	0.8 in (2.1 cm)
Package 1 Width	0.8 in (2.0 cm)
Package 1 Length	1.6 in (4.0 cm)
Package weight(Lbs)	0.3 oz (8.0 g)
Unit Type of Package 2	S01
Number of Units in Package 2	60
Package 2 Height	5.9 in (15.0 cm)
Package 2 Width	5.9 in (15.0 cm)
Package 2 Length	15.7 in (40.0 cm)
Package 2 Weight	24.9 oz (705.0 g)

Contractual warranty

Warranty	18 months

Environmental Data

Schneider Electric aims to achieve Net Zero status by 2050 through supply chain partnerships, lower impact materials, and circularity via our ongoing “Use Better, Use Longer, Use Again” campaign to extend product lifetimes and recyclability.

Environmental Data explained

How we assess product sustainability

Environmental footprint

Carbon footprint (kg CO2 eq, Total Life cycle)	1

Use Better

Materials and Substances

Packaging made with recycled cardboard	Yes
Packaging without single use plastic	No
EU RoHS Directive	Pro-active compliance (Product out of EU RoHS legal scope)
REACh Regulation	REACh Declaration
California proposition 65	WARNING: This product can expose you to chemicals including: Di-isodecyl phthalate (DIDP), which is known to the State of California to cause birth defects or other reproductive harm. For more information go to www.P65Warnings.ca.gov

Use Again

Repack and remanufacture

Recyclability potential, in %	17
Take-back	No

Dimensions Drawings

Circular Head for Illuminated or Non Illuminated Pushbutton

Dimensions

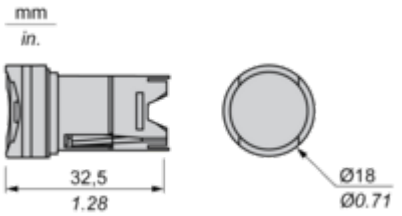

Mounting and Clearance

Panel Cut-out

For Square or Circular Head

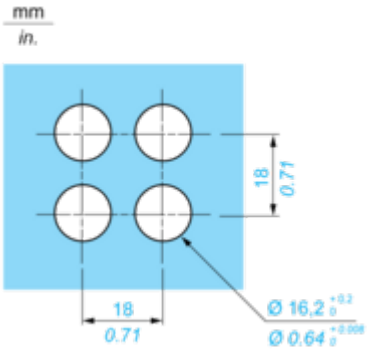

Pushbuttons, Switches and Pilot Lights for Printed Circuit Board Connection

Front Panel Cut-out (Viewed from Installer's Side)

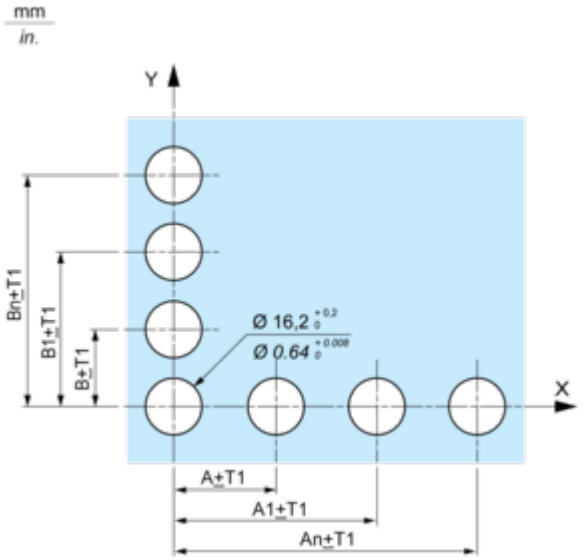

Printed Circuit Board Drillings (Viewed from Electrical Block Side)

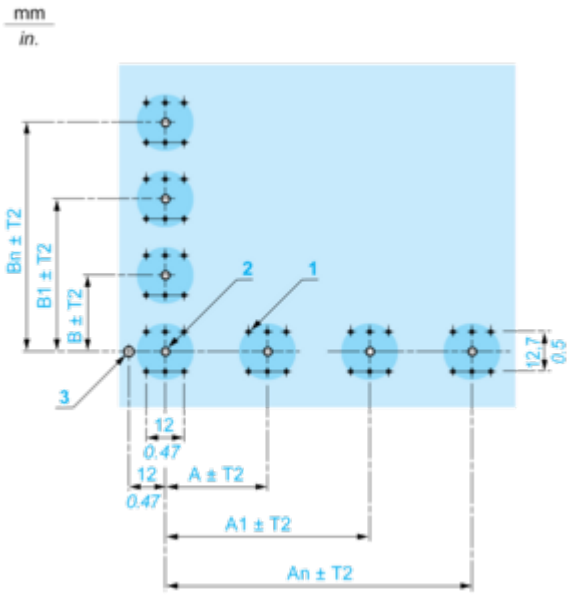

A 24 mm/0.94 in. minimum for rectangular heads, 18 mm/0.71 in. minimum for square or circular heads
B 18 mm/0.71 in. minimum
(1) 6 x Ø 1.1 mm / 6 x Ø 0.04 in. holes.
(2) 1 x Ø $2.6^{0}_{-0.2}$ mm / 1 x Ø $0.10^{0}_{-0.008}$ in. hole for locating pin, only when using socket adaptor ZB6Y010.
(3) 1 x Ø $3.2^{0}_{-0.2}$ mm / 1 x Ø $0.13^{0}_{-0.008}$ in. hole for fixing of printed circuit board onto the front panel using body bracket ZB6Y011. This hole must be drilled on the left-hand side, when heads are positioned at the normal angle. Fit a body bracket ZB6Y011 every 72 mm/2.83 in. maximum for cut-outs on 24 mm/0.94 in. centres (rectangular heads) and 54 mm/2.13 in. maximum for cut-outs on 18 mm/0.71 in. centres (square or circular heads).
General tolerances of the panel and printed circuit board: T1, T2: T1 + T2 = 0.3 mm/0.01 in. maximum.
Installation precautions:
Thickness of printed circuit board: 1.6 mm/0.06 in. minimum.

Mounting with Body Bracket

With socket adaptor ZB6Y010

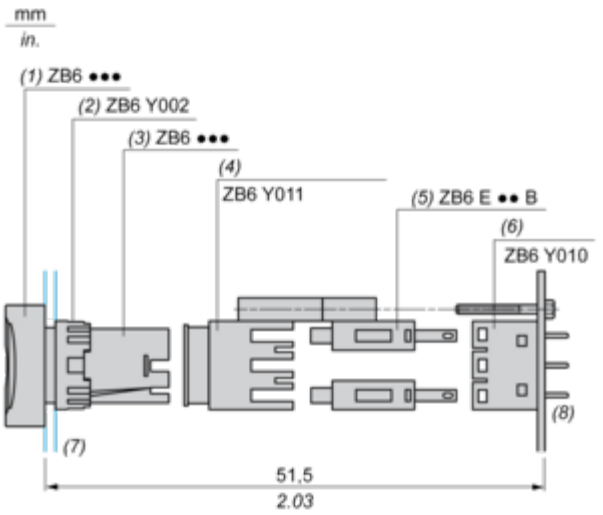

(1) Head
(2) Nut
(3) Body
(4) Body bracket
(5) Contact block
(6) Socket adaptor
(7) Panel
(8) Printed circuit

Direct mounting without socket adaptor ZB6Y010

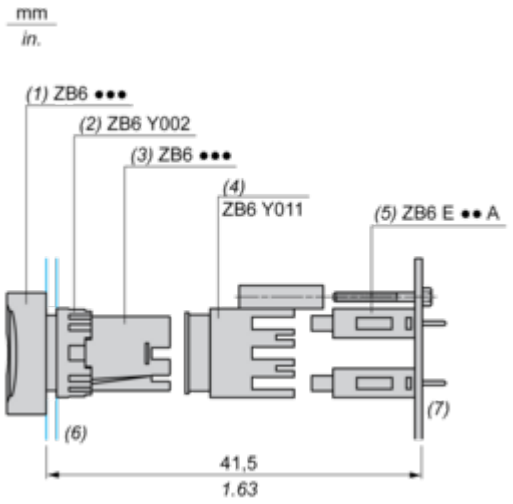

(1) Head
(2) Nut
(3) Body
(4) Body bracket
(5) Contact block
(6) Panel
(7) Printed circuit

Technical Illustration
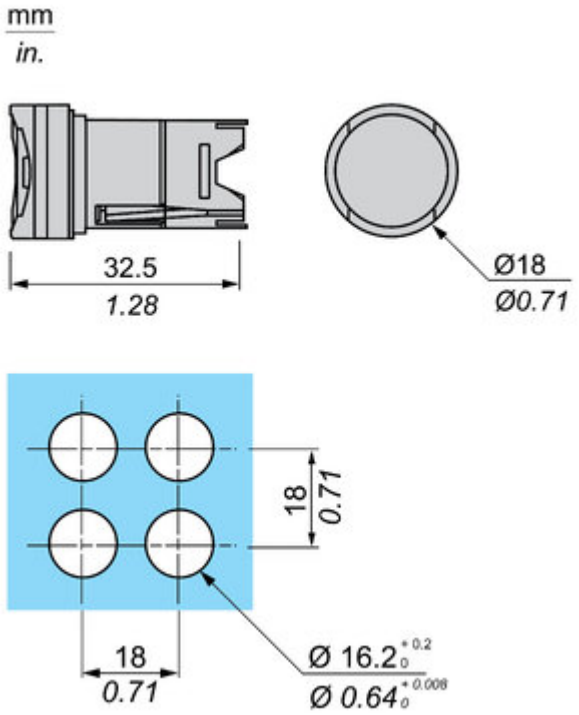
Dimensions