Product data sheet

Specifications

Empty control station, Harmony XALD, XALK, plastic, dark grey lid, light grey base, 3 cut out, UL CSA certified

XALD03H7

Product availability: Stock - Normally stocked in distribution facility

Main

Range of Product	Harmony XALD
Product or Component Type	Empty control station
Device short name	XALD
Product destination	For XB5 Ø 22 mm control and signalling units
Number of cut-out	3 cut-outs
Colour of base of enclosure	Light grey RAL 7035)
Colour of cover	Dark grey RAL 7016)
Material	Polycarbonate
Cable entry	2 knock-outs for cable entry 0.6 in (14 mm) 2 knock-outs for Pg 13 cable gland and ISO M20 0.5 in (12 mm)
IP degree of protection	IP66 IEC 60529 IP67 IP69 IP69K

Complementary

Assembly style	For customer assembly
Number of horizontal rows	1
Number of vertical rows	3
Net Weight	0.525 lb(US) (0.238 kg)
Resistance to high pressure washer	1015.3 psi (7000000 Pa) 131 °F (55 °C) 0.1 m
Mounting of block	Rear mounting Front mounting
electrical composition code	PF2 MR1 SF1 MF2 SF2 SR2 SR1 PR1 PF1 MF1
Main group	3 cut-outs
Group of product	UL-CSA grey

Environment

Price is “List Price” and may be subject to a trade discount – check with your local distributor or retailer for actual price.

Disclaimer: This documentation is not intended as a substitute for and is not to be used for determining suitability or reliability of these products for specific user applications

Protective treatment	TH
Ambient Air Temperature for Storage	-40…158 °F (-40…70 °C)
Ambient air temperature for operation	-40…158 °F (-40…70 °C)
Overvoltage category	Class II conforming to IEC 60536
NEMA degree of protection	NEMA 13 NEMA 4X
IK degree of protection	IK03 conforming to IEC 62262
Standards	IEC 60947-5-4 CSA C22.2 No 14 IEC 60947-5-1 JIS C8201-5-1 IEC 60947-1 IEC 60947-5-5 UL 508 JIS C8201-1
Product Certifications	UL CSA

Ordering and shipping details

Category	US10CS222475
Discount Schedule	0CS2
GTIN	3389110114942
Returnability	Yes
Country of origin	CZ

Packing Units

Unit Type of Package 1	PCE
Nbr. of units in pkg.	1
Package 1 Height	2.756 in (7.000 cm)
Package 1 Width	3.071 in (7.800 cm)
Package 1 Length	5.512 in (14.000 cm)
Package weight(Lbs)	8.254 oz (234.000 g)
Unit Type of Package 2	S03
Number of Units in Package 2	30
Package 2 Height	11.8 in (30 cm)
Package 2 Width	11.8 in (30 cm)
Package 2 Length	15.7 in (40 cm)
Package 2 Weight	16.409 lb(US) (7.443 kg)
Unit Type of Package 3	P06
Number of Units in Package 3	240
Package 3 Height	30.315 in (77.000 cm)
Package 3 Width	23.622 in (60.000 cm)
Package 3 Length	31.496 in (80.000 cm)
Package 3 Weight	148.691 lb(US) (67.445 kg)

Contractual warranty

Warranty	18 months

Environmental Data

Schneider Electric aims to achieve Net Zero status by 2050 through supply chain partnerships, lower impact materials, and circularity via our ongoing “Use Better, Use Longer, Use Again” campaign to extend product lifetimes and recyclability.

Environmental Data explained >

How we assess product sustainability >

Environmental footprint

Carbon footprint (kg CO2 eq, Total Life cycle)	2
Environmental Disclosure	Product Environmental Profile

Use Better

Materials and Substances

Packaging made with recycled cardboard	Yes
Packaging without single use plastic	Yes
EU RoHS Directive	Pro-active compliance (Product out of EU RoHS legal scope)
REACh Regulation	REACh Declaration

Use Again

Repack and remanufacture

Recyclability potential, in %	18
Circularity Profile	End of Life Information
Take-back	No

Dimensions Drawings

Dimensions

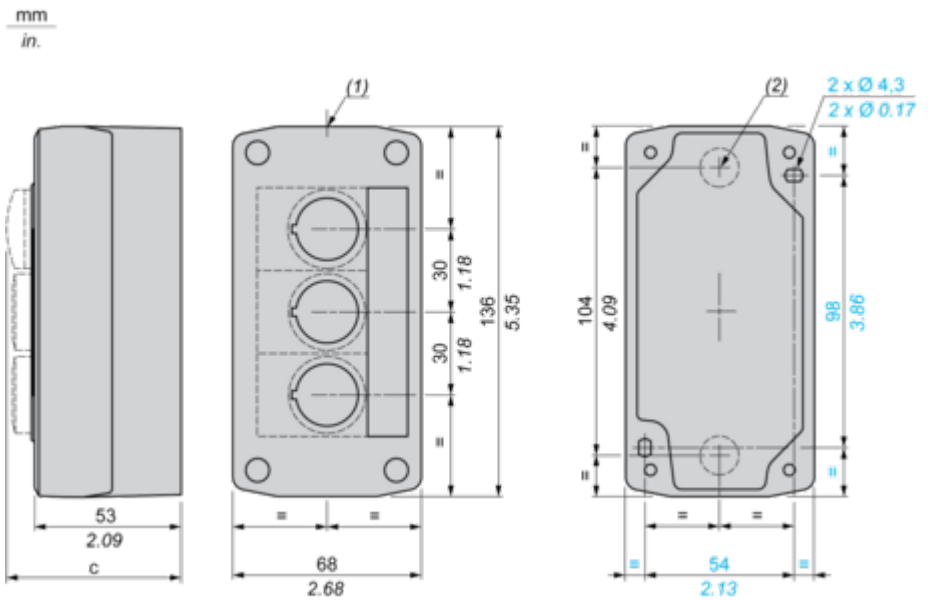

(1) 2 knock-outs for Pg 13.5 cable gland, maximum capacity 12 mm/0.47 in.
(2) Knock-out for cable entry, maximum capacity 14 mm/0.55 in.

Control station fitted with:	c in mm	c in in.
Flush pushbutton	62	2.44
Illuminated pushbutton	64	2.52
Pilot light	65.5	2.58
Projecting pushbutton	66	2.60
Selector switch	80	3.15
Key switch	105.5	4.15

Technical Illustration

Dimensions

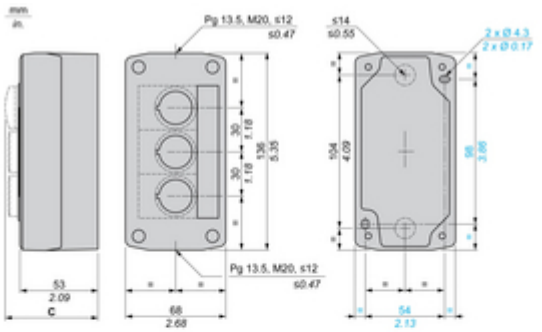

C	mm	in.
ZB5AA●, ZB5AH0●	62	2.44
ZB5AV●	64	2.52
ZB5AW3●	65.5	2.58
ZB5AL●, ZB5AW1●, ZB5AH●, ZB5AH●3	66	2.6
ZB5AD●, ZB5AK●	80	3.15
ZB5AS8●, ZB5AT●, ZB5AC●, ZB5AR●, ZB5AW4●, ZB5AW6●, ZB5AS4●, ZB5AS5●, ZB5AS6●	91.5	3.58
ZB5AS9●, ZB5AS1●, ZB5AS7●	115	4.53
ZB5AG●	105.5	4.15

Offer Marketing Illustration

Product benefits / Features

Offer Marketing Illustration

Product benefits / Features

Image of product / Alternate images

Alternative

CM 12
PG 13,5
ISO 20

CM 12
PG 13,5
150 20