80043-775-01
04/2009
Peru, IN, USA

Instruction Bulletin

Replaces 80043-680-03 08/2007

ENGLISH

Double Tub Nipple Kit

Installation onto NQ or NF Panelboard Enclosures Classes 1640 and 1670

Retain for future use.

Introduction

This bulletin contains instructions for installing a Square D® brand double tub nipple kit onto a Square D brand NQ or NF panelboard manufactured by Schneider Electric.

Safety Precautions

⚠ DANGER

HAZARD OF ELECTRIC SHOCK, EXPLOSION, OR ARC FLASH

- Apply appropriate personal protective equipment (PPE) and follow safe electrical work practices. See NFPA 70E.
- This equipment must only be installed and serviced by qualified electrical personnel.
- Turn off all power supplying this equipment before working on or inside equipment.
- Always use a properly rated voltage sensing device to confirm power is off.
- Replace all devices, doors, and covers before turning on power to this equipment.

Failure to follow these instructions will result in death or serious injury.

Kit Contents

DTNKF and DTNKS

A. **DTNKF kit only**–4 in. (102 mm) Nipple (1)
B. **DTNKS kit only**–4 in. (102 mm) Nipple (1)
C. Nipple lock nut
DTNKF kit (4), **DTNKS kit** (1)
D. Nipple insulation bushing
DTNKF kit (2), **DTNKS kit** (1)
E. **DTNKF kit only**–1/4-20 x 2-in. Screws (4)
F. **DTNKS kit only**–1/4-20 x 1-in. Screws (4)
G. Flat washer
DTNKF kit (16), **DTNKS kit** (8)
H. Lock washer (4)
I. 1/4-20 Nut (4)
J. **DTNKF kit only**–Spacer (4)

NOTE: Kit contents not shown to scale.

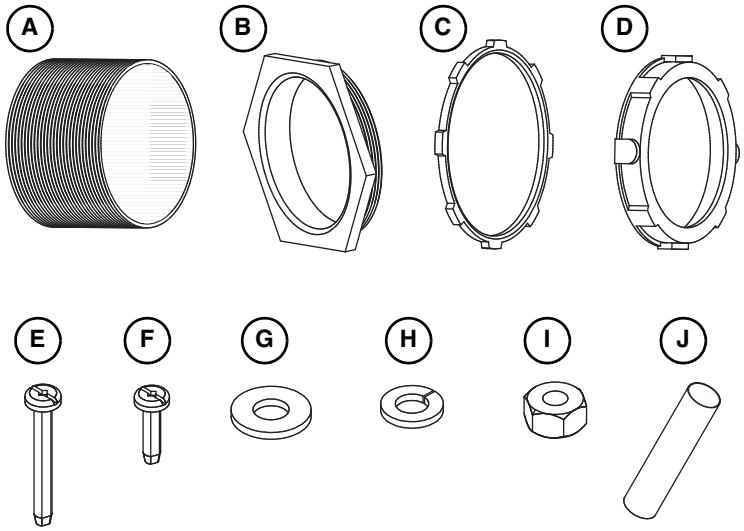

Tools Needed

- #3 Square-head Robertson screwdriver
- 3/8-in. Hex socket driver
- Drill with 9/32-in. sheet metal drill bit
- Metal punching equipment

© 2009 Schneider Electric All Rights Reserved

SQUARE D
by Schneider Electric

ENGLISH

Preparing the Tubs for Kit Installation

Turn off all power supplying this equipment before working inside the panelboard; follow all lockout/tagout procedures.

1 Punch a 4.5 in. (114 mm) hole in each tub sidewall where the nipple will be inserted.

NOTE: Ensure the new 4.5 in. (114 mm) holes face each other when the tubs are aligned as shown.

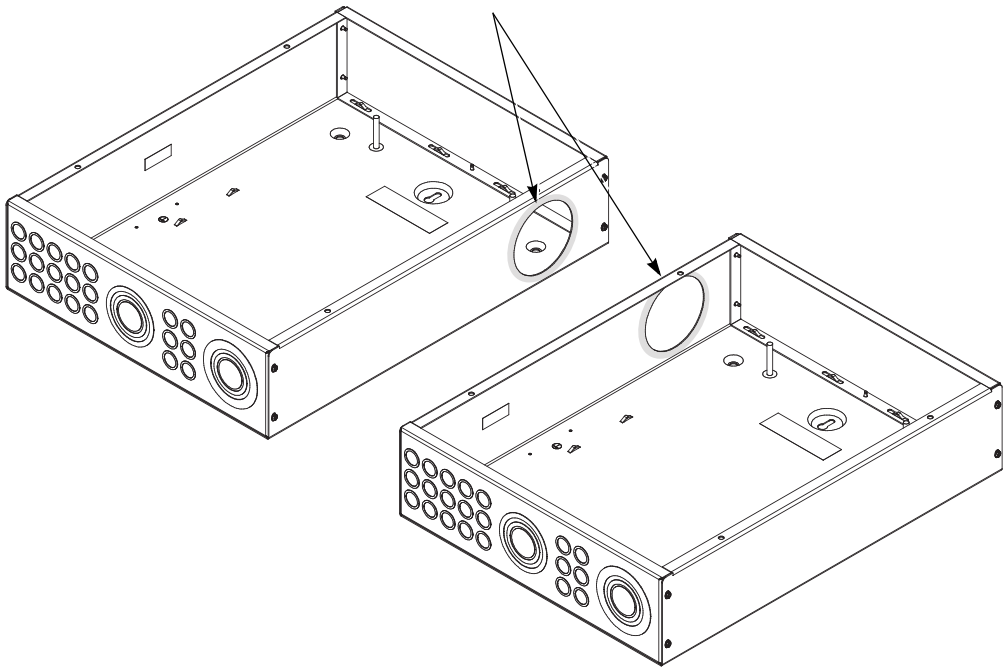

© 2009 Schneider Electric All Rights Reserved

ENGLISH

2 Remove and discard the four endwall mounting screws from the mating sidewalls modified in step 1 for both tubs.

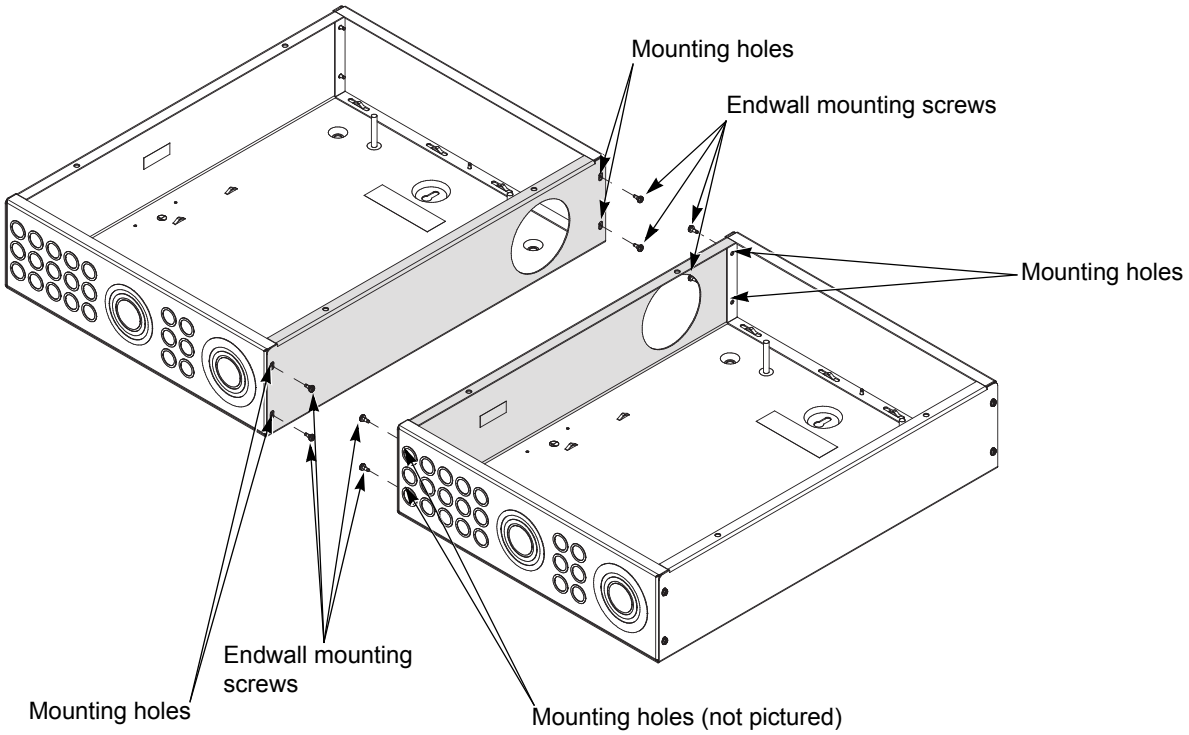

3 Drill out the mounting holes with a 9/32-in. sheet metal drill bit.

4 **If installing kit DTNKF for flush-mounted applications, proceed with step 5 on page 4.**

If installing kit DTNKS for surface-mounted applications, proceed with step 5 on page 6.

© 2009 Schneider Electric All Rights Reserved

ENGLISH

Installing Kit DTNKF for Flush-Mounted Applications

5 Position the tubs with the punched sidewall holes aligned. Fasten the two tubs with the 1/4-20 x 2-in. screws, flat washers, lock washers, 1/4-20 nuts, and spacers, included in the kit, as shown.

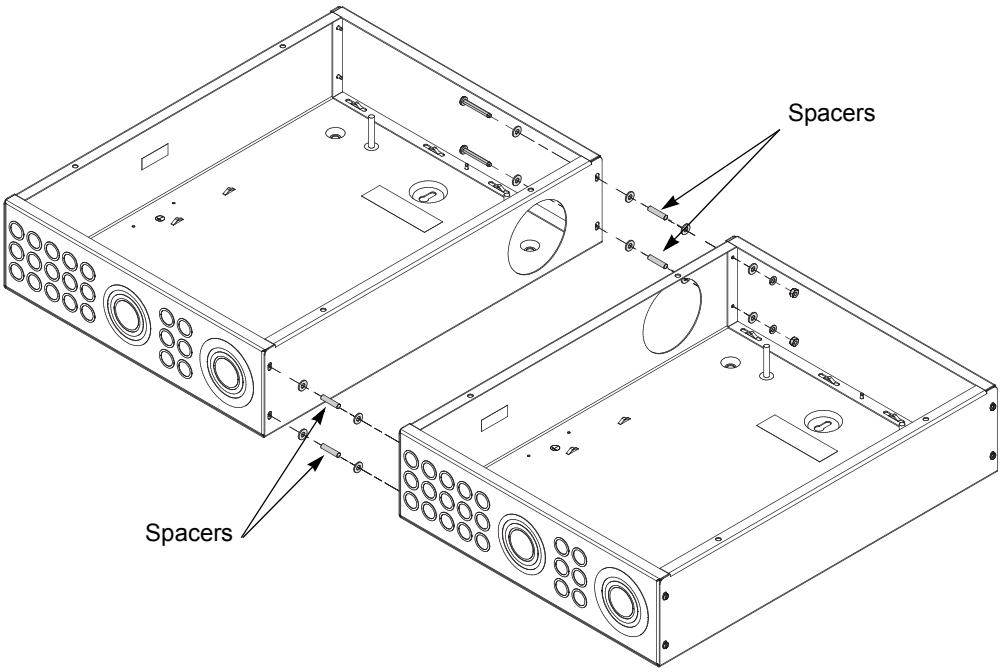

6 Insert the 4 in. (102 mm) nipple, included in the kit, through the puched holes and two nipple lock nuts, included in the kit, as shown. Hand tighten the nipple lock nuts against the exterior tub sidewalls.

NOTE: Ensure nipple is centered in space between the two tub sidewalls.

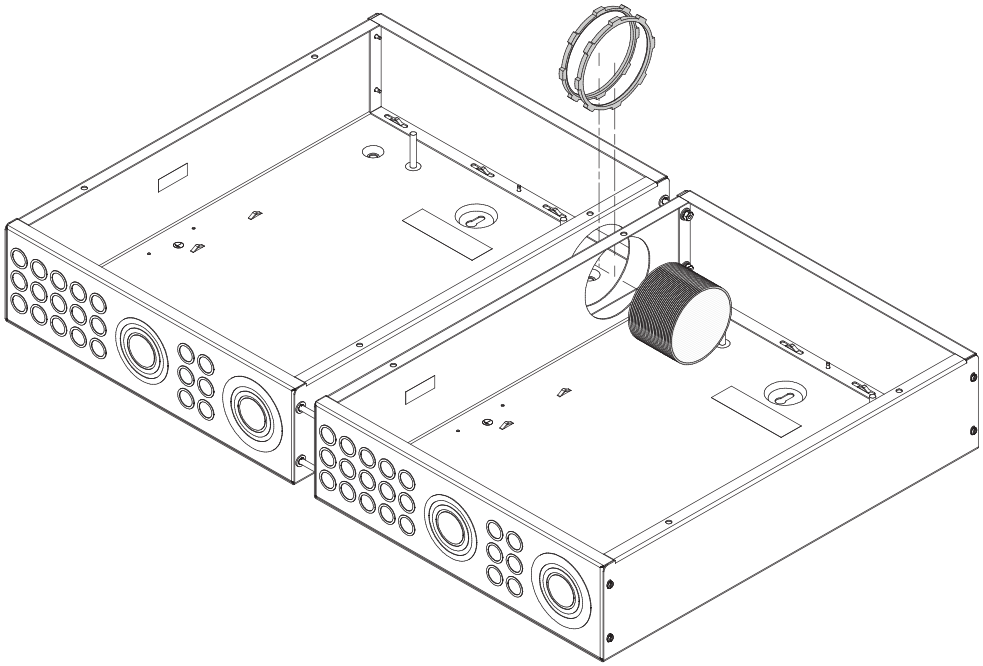

© 2009 Schneider Electric All Rights Reserved

ENGLISH

7 Secure the nipple to the interior tub sidewalls with a nipple lock nut, included in the kit, on each nipple end as shown. Hand tighten.

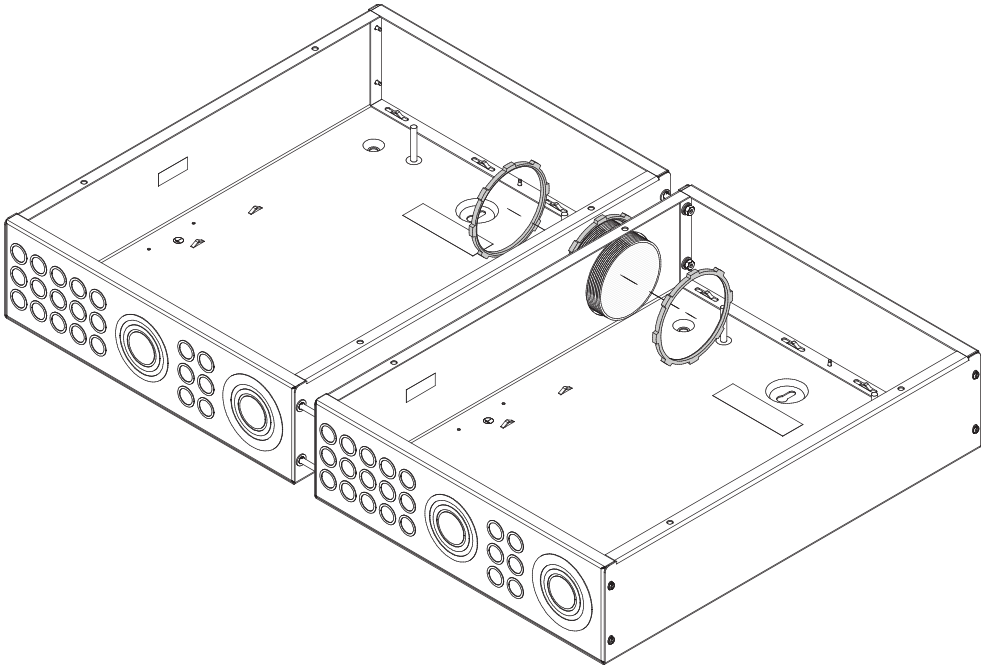

8 Seal the punched sidewall holes with a nipple insulation bushing, included in the kit, on each nipple end as shown. Hand tighten.

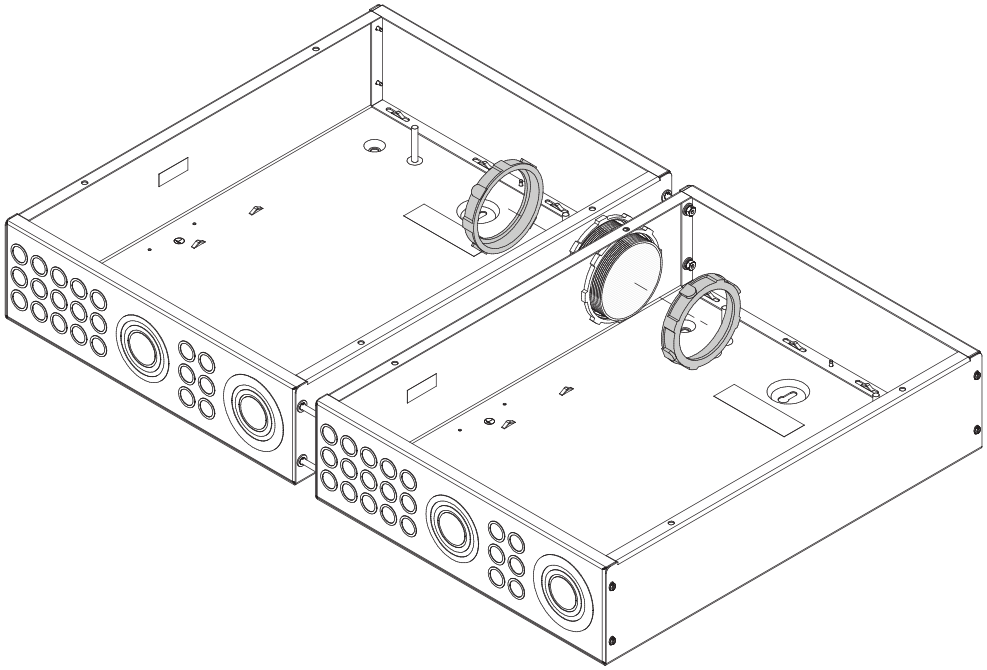

© 2009 Schneider Electric All Rights Reserved

ENGLISH

Installing Kit DTNKS for Surface-Mounted Applications

5 Position the tubs with the punched sidewall holes aligned. Fasten the two tubs with the 1/4-20 x 1-in. screws, flat washers, lock washers, and 1/4-20 nuts, included in the kit, as shown.

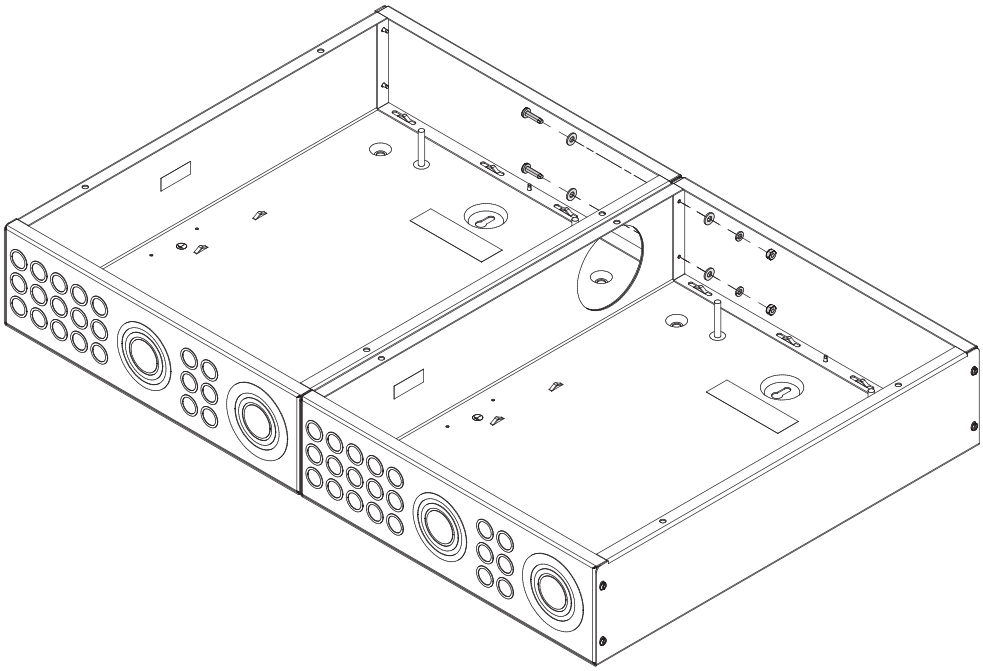

6 Insert the 4 in. (102 mm) nipple, included in the kit, into the punched sidewall holes as shown.

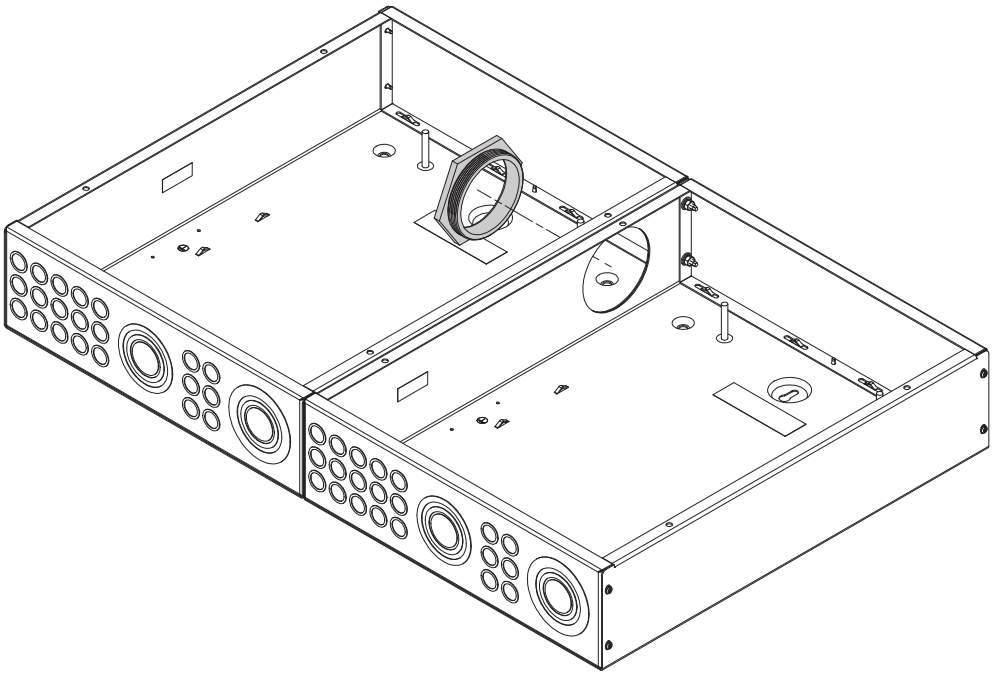

© 2009 Schneider Electric All Rights Reserved

ENGLISH

7 Secure the nipple to the tub sidewall with a nipple lock nut, included in the kit, as shown. Hand tighten.

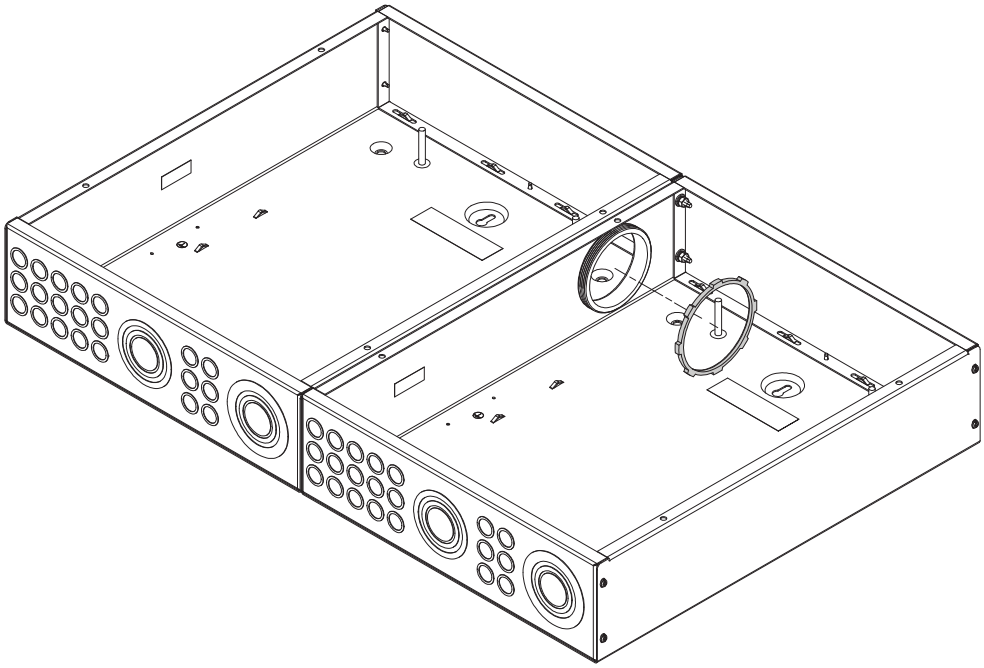

8 Seal the punched sidewall holes with a nipple insulation bushing, included in the kit, on the nipple end as shown. Hand tighten.

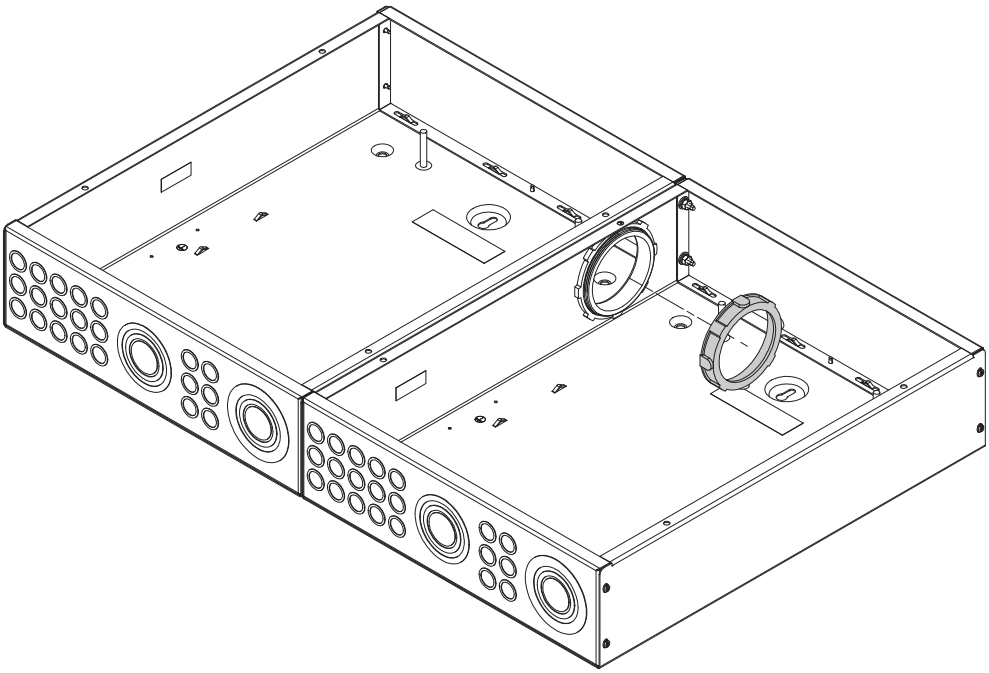

© 2009 Schneider Electric All Rights Reserved

ENGLISH

Schneider Electric USA
252 North Tippecanoe
Peru, IN 46970 USA
1-888-SquareD (1-888-778-2733)
www.us.SquareD.com

Square D® is a trademark or registered trademark of Schneider Electric. Other trademarks used herein are the property of their respective owners.

Electrical equipment should be installed, operated, serviced, and maintained only by qualified personnel. No responsibility is assumed by Schneider Electric for any consequences arising out of the use of this material.

© 2009 Schneider Electric All Rights Reserved

California Proposition 65 Warning—Nickel Compounds and Bisphenol A (BPA)

Advertencia de la Proposición 65 de California—compuestos de níquel y Bisfenol A (BPA)

Avertissement concernant la Proposition 65 de Californie—composés de nickel et Bisphénol A (BPA)

⚠ **WARNING:** This product can expose you to chemicals including Nickel compounds, which are known to the State of California to cause cancer, and Bisphenol A (BPA), which is known to the State of California to cause birth defects or other reproductive harm. For more information go to www.P65Warnings.ca.gov.

⚠ **ADVERTENCIA:** Este producto puede exponerle a químicos incluyendo compuestos de níquel, que son conocidos por el Estado de California como causantes de cáncer, y Bisfenol A (BPA), que es conocido por el Estado de California como causante de defectos de nacimiento u otros daños reproductivos. Para mayor información, visite www.P65Warnings.ca.gov.

⚠ **AVERTISSEMENT**: Ce produit peut vous exposer à des agents chimiques, y compris composés de nickel, identifiés par l'État de Californie comme pouvant causer le cancer, et Bisphénol A (BPA) reconnus par l'État de Californie comme pouvant causer des malformations congénitales ou autres troubles de l'appareil reproducteur. Pour de plus amples informations, prière de consulter www.P65Warnings.ca.gov.

All trademarks are the property of Schneider Electric SE, its subsidiaries, and affiliated companies.

Schneider Electric USA, Inc.
800 Federal Street
Andover, MA 01810 USA
888-778-2733
www.schneider-electric.us

Todas las marcas comerciales son propiedad de Schneider Electric SE, sus filiales y compañías afiliadas.

Importado en México por:
Schneider Electric México, S.A. de C.V.
Av. Ejercito Nacional No. 904
Col. Palmas, Polanco 11560 México, D.F.
55-5804-5000
www.schneider-electric.com.mx

Toutes les marques commerciales sont la propriété de Schneider Electric SE, ses filiales et compagnies affiliées.

Schneider Electric Canada, Inc.
5985 McLaughlin Road
Mississauga, ON L5R 1B8 Canada
800-565-6699
www.schneider-electric.ca

© 2018 Schneider Electric All Rights Reserved / Reservados todos los derechos / Tous droits réservés