Product data sheet

Specifications

Mini circuit breaker, Homeline, 45A, 2 pole, 120/240VAC, 10kA AIR, standard type, plug in, UL

HOM245

Product availability: Stock - Normally stocked in distribution facility

Main

Product	Miniature circuit-breaker
Range	Homeline
Current Rating	45 A
Certifications	UL Listed
Voltage Rating	120/240 V AC
Mounting Type	Plug-in
Number of Poles	2P
Short Circuit Current Rating	10 kA
Number of Spaces	2
Circuit Breaker Type	Standard
Ratings	HACR rated
Electrical Connection	Box lugs
Wire Size	1 x AWG 8...AWG 2 (aluminium/copper)

Complementary

Tightening torque	40.7 lbf.in (4.6 N.m) (AWG 8...AWG 2)
Height	3.13 in (79.50 mm)
Width	2 in (50.8 mm)
Depth	2.98 in (75.69 mm)

Environment

Ambient Air Temperature for Operation	104 °F (40 °C)

Ordering and shipping details

Category	US1DE3D00046
Discount Schedule	DE3D
GTIN	785901065500
Returnability	Yes
Country of origin	MX

Packing Units

Unit Type of Package 1	PCE

Price is “List Price” and may be subject to a trade discount – check with your local distributor or retailer for actual price.

Disclaimer: This documentation is not intended as a substitute for and is not to be used for determining suitability or reliability of these products for specific user applications

Nbr. of units in pkg.	1
Package 1 Height	2.00 in (5.08 cm)
Package 1 Width	3.00 in (7.62 cm)
Package 1 Length	3.100 in (7.874 cm)
Package weight(Lbs)	11.200 oz (317.515 g)

Contractual warranty

Warranty (in months)	18

Environmental Data

Schneider Electric aims to achieve Net Zero status by 2050 through supply chain partnerships, lower impact materials, and circularity via our ongoing “Use Better, Use Longer, Use Again” campaign to extend product lifetimes and recyclability.

Environmental Data explained >

How we assess product sustainability >

Environmental footprint

Carbon footprint (kg CO2 eq, Total Life cycle)	23
Environmental Disclosure	Product Environmental Profile

Use Better

Materials and Substances

Packaging made with recycled cardboard	Yes
Packaging without single use plastic	Yes
EU RoHS Directive	Compliant
REACh Regulation	REACh Declaration

Use Again

Repack and remanufacture

Circularity Profile	No need of specific recycling operations
Take-back	No

Technical Illustration

Dimensions

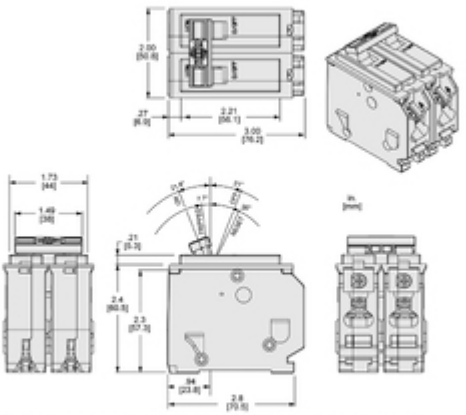

All dimensions are approximate. Also refer to technical drawings and documentation.

Image of product / Alternate images

Alternative