Product data sheet

Specifications

Circuit breaker, LA, 400A, 3 pole, 600VAC, 22kA, 250VDC, 10kA, lugs, thermal magnetic, short handle

LAP36400MB

Product availability: Stock - Normally stocked in distribution facility

Main

Product or Component Type	Circuit breaker
Trip Unit Technology	Magnetic

Complementary

Line Rated Current	400 A
Number of Poles	3P
Breaking capacity code	A
Mounting Mode	Unit mount
Wiring Configuration	3-wire
Magnetic Hold Current	2000 A
Magnetic Tripping Current	4000 A
Operator	Short lever
Electrical connection	Lugs, load Terminal, line
Terminal identifier	AL400LA
Height	11 in (279.4 mm)
Width	6 in (152.4 mm)
Depth	5.84 in (148.34 mm)
Circuit breaker application	HACR rated

Environment

Certifications	IEC CSA UL Listed

Ordering and shipping details

Category	US10DE200935
Discount Schedule	0DE2
GTIN	785901650386
Returnability	Yes
Country of origin	MX

Packing Units

Price is “List Price” and may be subject to a trade discount – check with your local distributor or retailer for actual price.

Disclaimer: This documentation is not intended as a substitute for and is not to be used for determining suitability or reliability of these products for specific user applications

Unit Type of Package 1	PCE
Nbr. of units in pkg.	1
Package 1 Height	9.200 in (23.368 cm)
Package 1 Width	11.500 in (29.210 cm)
Package 1 Length	17.300 in (43.942 cm)
Package weight(Lbs)	15.0003 lb(US) (6.804 kg)
Unit Type of Package 2	PAL
Number of Units in Package 2	24
Package 2 Height	40.000 in (101.600 cm)
Package 2 Width	40.000 in (101.600 cm)
Package 2 Length	48.000 in (121.920 cm)
Package 2 Weight	529.000 lb(US) (239.950 kg)

Contractual warranty

Warranty	18 months

Environmental Data

Schneider Electric aims to achieve Net Zero status by 2050 through supply chain partnerships, lower impact materials, and circularity via our ongoing “Use Better, Use Longer, Use Again” campaign to extend product lifetimes and recyclability.

Environmental Data explained >

How we assess product sustainability >

Environmental footprint

Carbon footprint (kg CO2 eq, Total Life cycle)	**1160**
Environmental Disclosure	**Product Environmental Profile**

Use Better

Materials and Substances

Packaging made with recycled cardboard	**Yes**
Packaging without single use plastic	**Yes**
EU RoHS Directive	**Compliant with Exemptions**
SCIP Number	**45160aaa-1457-439f-bca7-7bd5246ac23e**
REACh Regulation	**REACh Declaration**
California proposition 65	**WARNING: This product can expose you to chemicals including: DINP, which is known to the State of California to cause cancer, and DIDP, which is known to the State of California to cause birth defects or other reproductive harm. For more information go to www.P65Warnings.ca.gov**
Halogen content performance	**Halogen free plastic parts product**
PVC free	**Yes**

Use Again

Repack and remanufacture

Recyclability potential, in %	**58**
Circularity Profile	**No need of specific recycling operations**
Take-back	**No**

Technical Illustration

Dimensions

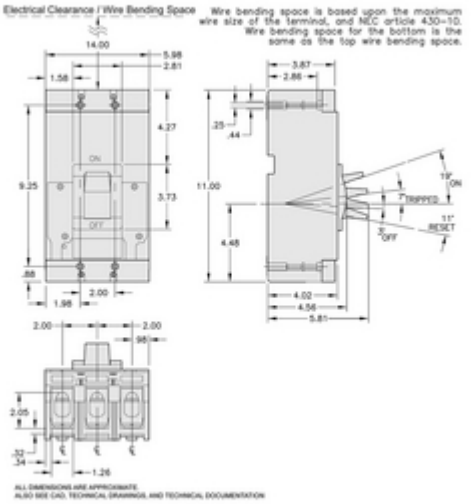

Image of product / Alternate images

Alternative