Schneider Electric

Panel Builders Catalog

PowerLogic™ series energy and power meters catalog for Panel Builders

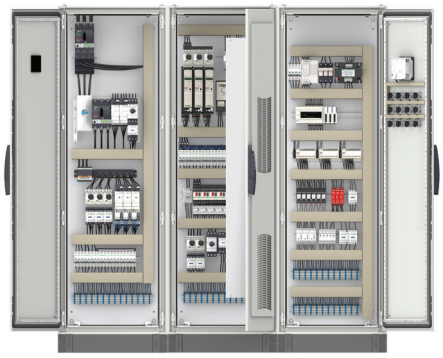

www.se.com

Life Is On | Schneider Electric

Schneider Electric

PowerLogic™ Energy and power meters catalog for panel builders

Contents

Introduction	3
Selection guide panorama	4
Current transformers	8
Panel instruments DIN ammeter/voltmeter	27
Basic energy metering iEM2000, iEM3000, PM3000, and PowerTag Energy series	38
Wireless products PowerTag Control and HeatTag	98
Basic multi-function metering PM5000 and PM5350 series	106
EcoStruxure™ Panel Server Entry, Universal and Advanced	127
Commercial reference numbers	138

See your Schneider Electric representative for complete ordering information.

www.se.com

Clicking on a
Commercial Reference Number
or scanning the product's
QR Code
links you to further product information on
www.se.com

Why Panel Builders Choose Schneider Electric?

Schneider Electric is the global specialist in energy management and as such it has the most complete power motoring product line, going from simple indicators (analog meters) and CTs, to world class accurate energy meters and powerful compact power meters. These proven products come with multiple options to satisfy any requirement.

Schneider Electric products are safe and reliable. We comply with the most stringent standards, including IEC, MID, UL, etc., and we thoroughly test all products with third-party laboratories. This gives our partners the peace of mind and the confidence that they are maintaining a good reputation while delivering the best value in equipment and service to their customers.

Our products are simple to install, configure, and use. This saves our partners time and money and lets them deliver the best solutions in a timely and cost-effective manner.

Whatever the size or type of application, the PowerLogic™ product line is an integral part of smart panels.

Panorama of the PowerLogic™ range

Use this panorama to select the most efficient products for your application needs

Current transformers

Panel instruments

CTs Ip / 5 A	Name	iAMP	iVLT	AMP/VLT	iFRE	iCH/iCI
current transformer	**Function**	ammeter, voltmeter	ammeter, voltmeter	ammeter, voltmeter	frequency meter	hour counter pulse counter
Installation i. Solid Core CTs ■ Insulated Cable, diameter 21 to 35 mm ■ busbar through transformer ■ cable connections ii. Split Core CTs ■ CT installation without the need to uninstall and reinstall power conductors ■ Cable and Busbar connections	**Applications**					
	Panel instrumentation					
	Panel instrumentation	**I / U**	**I / U**	**I / U**	**F**	**hours/pulses**
	Energy efficiency & cost					
	Sub-billing & cost allocation					
	Demand & load management					
	Billing analysis					
	Power availability & reliability					
	Compliance monitoring					
	Sag/swell, transient					
	Harmonics					
	Revenue metering					
	Revenue meter					
Characteristics i. Solid Core CTs ■ transformation ratio : 40/5 A to 6000/5 A ■ accuracy : class 0.5 to 3 ■ maximum rated operational voltage : 720 V AC ■ tropicalised range 25 °C to +60 °C (1) relative humidity > 95 % (1) Warning: some products are limited to +50 °C. ii. Split Core CTs ■ transformation ratio : 100/5A to 4000/5A ■ accuracy : class 0.5 to 3 ■ maximum rated operational voltage : 720 V AC ■ Cable connection : -5°C to +50°C relative humidity 5–85 % ■ Busbar connection : 5°C to +40°C relative humidity 5–85 %	**Characteristics**					
	Measurement accuracy	Class 1.5	± 0.5 % ± 1 digit	Class 1.5	± 0.5 % ± 1 digit	
	Installation	DIN rail 4 x 18 mm modules	DIN rail 2 x 18 mm modules	flush mounted 72 x 72 mm 96 x 96 mm	DIN rail 2 x 18 mm modules	iCI, iCH: DIN rail 2 x 18 mm modules CH: flush mount
	Measurement	iAMP: 30 A direct or external CT	iVLT: 600 V AC direct or external VT	VLT: 500 V AC direct or external VT AMP: external CT	400 V AC direct	
	Communication ports					
	Inputs / Outputs					
	Memory capacity					
page 8		page 28	page 29	page 30	page 29	page 34

Panorama of the PowerLogic™ range (cont'd)

Basic energy metering

Name	iEM2xxx Range iEM2000, iEM2100, iEM2400	iEM3000 Series	PM3000 Series	PowerTag Energy Series
Function	kilowatt-hour meter IEC 62052-31:2015 BS/EN/IEC 62053-21 BS/EN/IEC 62053-23 EN 50470-1:2006 EN 50470-3:2006 IEC 61557-12:2018	kilowatt-hour meters power and energy meters metering & sub-metering IEC 62052-31:2015 BS/EN/IEC 62053-21:2020 ed 2 BS/EN/IEC 62053-22:2020 ed 2 BS/EN/IEC 62053-23:2020 ed 2 EN 50470-1:2006 EN 50470-3:2006 IEC 61557-12:2018	metering & sub-metering Class 0.5S IEC 62053-22 Class 1 IEC 62053-21 Class 2 IEC 62053-23	wireless power & energy meter
Applications				
Panel instrumentation				
Panel instrumentation	E (in all range) I, U, F, P, Q ,S, PF (in selected ranges)	I, U, F, P, Q, S, PF, E (Power demand and current demand)	I, U, F, P, Q, S, PF, E (Power demand and current demand)	I, U, F, P, Q, S, PF, E (Depending on reference; Power demand depending on gateway)
Energy efficiency and cost				
Sub-billing & cost allocation				cost allocation only
Demand & load management				
Billing analysis				
Power availability & reliability				
Compliance monitoring				
Dip/swell, transient				
Harmonics				
Revenue metering				
Revenue meter				
Characteristics				
Measurement accuracy	Class 1 (Wh)/ Class 2 (VARh)	Class 0.5S / Class 1 (Wh) Class 2 (VARh)	Class 0.5	IEC 61557-12 PMD/DD Class 1 (active energy)
Installation	DIN rail 1, 2 x 18 mm modules	DIN rail 5, 7 x 18 mm modules	DIN rail	on product or on cables depending on the reference
Voltage measurement	up to 276 V (Ph-N) AC direct	100 - 277 V L-N, 173 - 480 V L-L up to 1MV AC (ext VT)	50 V to 330 V AC (Ph-N) 80 V to 570 V AC (Ph-Ph) up to 1M V AC (ext VT)	up to 277 V AC (Ph-N) / 480 V AC (Ph-Ph) depending on the reference
Current measurement	40 to 125 A direct	external CT (iEM3200), external LVCT(iEM3400/3500) direct 63 A (iEM3100), direct 125 A (iEM3300)	external CT	63 to 2000 A
Communication ports	RS-485, M-Bus in selected references	RS-485, M-Bus, BACnet, LonWorks in selected references	1	Wireless
Inputs / Outputs	1/1 (in selected)	up to 2 Inputs and 1 Output	2 I/O	
Memory capacity				
	page 39	page 44	page 50	page 56

Panorama of the PowerLogic™ range (cont'd)

Wireless products

Basic multi-function metering

Name	PowerTag Control	HeatTag Smart Sensor	PM5000 Series	PM5350 Series
Function	Circuit monitoring & control IEC 60364-8-1 EN 17267 ISO 50010	Early detection of overheating wire connections or overheating cables	metering & sub-metering IEC 62052-31:2015 BS/EN/IEC 62053-22:2020 ed 2 BS/EN/IEC 62053-23:2020 ed 2 EN 50470-1:2006 EN 50470-3:2006 IEC 61557-12:2018	Class 0.5S IEC 62053-22 Class 2 IEC 62053-23 Class 1 IEC 61557-12
Applications				
Panel instrumentation				
Panel instrumentation		**Analysis of gas and micro-particles, Temperature, Humidity**	**I, U, F, P, Q, S, PF, E (Power demand and current demand)**	**I, U, F, P, Q, S, PF, E (Power demand and current demand)**
Energy efficiency and cost				
Sub-billing & cost allocation				
Demand & load management				
Billing analysis				
Power availability & reliability				
Compliance monitoring				
Dip/swell, transient				
Harmonics				
Residual current M				
Revenue metering				
Revenue meter				
Characteristics				
Measurement accuracy		Temperature ±-1.1 °C Humidity ± 9 RH%	Class 0.5S	Class 0.5
Installation	DIN rail	DIN rail 6 x 18 mm modules	Flush mount 96 mm x 96 mm or DIN rail (PM5563)	Flush mount 96 mm x 96 mm
Voltage measurement			20 V to 400 V AC L-N 35 V to 690 V AC L-L	20 V to 300 V L-N 35 V to 520 V L-L
Current measurement			external CT	external CT
Communication ports	Wireless		RS-485, Ethernet, BACnet, Ethernet IP	RS-485
Inputs / Outputs	2 I/O		up to 4 inputs/ 2 outputs	up to 4 inputs/ 2 outputs
Memory capacity			Available	
	page 99	**page 103**	**page 107**	**page 120**

Panorama of the PowerLogic™ range (cont'd)

EcoStruxure™ Panel Server

Name	EcoStruxure™ Panel Server
Function	IoT gateway for intelligent power network
Features	
RS-485 / Ethernet gateway	Supports IEEE 802.15.4 and Modbus devices
Devices supported	Wired devices communicating though Modbus-SL, Modbus TCP/IP, or digital inputs: Circuit breakers and switch-disconnectors, Protection relays, Power meters, Energy meters, Pulse meters, IO modules, Gateways Wireless devices: PowerTag Energy sensors, Environmental sensors, Acti9 Active, HeatTage sensors, PowerTag Control modules, Wireless indication auxiliaries for ComPacT NSX and ComPacT NSXm, circuit breakers
Web server with standard HTML pages	
Web server with custom HTML pages	
Real time data	Available on web server embedded in Panel Server
Historical data	Available on web server embedded in Panel Server (Advanced Panel Server only)
Automatic notification	Available on embedded web server (Advanced Panel Server only), edge control system & cloud-hosted application
Alarm and event logs	Available on embedded web server (Advanced Panel Server only), edge control system & cloud-hosted application
Waveform display	
Custom animated graphics	
Manual/automatic reports	
Characteristics	
Ethernet ports Modbus TCP/IP protocol	Two Ethernet 10Base-T/100Base-T port Wi-Fi Bluetooth communication for commissioning
RS-485 (2-wire / 4-wire) ports, Modbus protocol	Modbus RS485 serial communication IEEE 802.15.4 wireless communication
Number of devices connected directly	Modbus TCP/IP server and client Support of HTTPS, NTP, SNTP, DHCP client and server with proxy management
RS-232 configuration ports	Modbus RS485 to Modbus/TCP Gateway Wireless devices concentrator to Modbus/TCP
Miscellaneous	Two digital inputs (24VDC version only) Commissioning through EcoStruxure™ Power Commission or through Embedded Web-Pages
Installation	

page 127

PowerLogic™ Current Transformers (CT)

IEC certified Solid core and Split core types

Schneider Electric is the global specialist in energy management with the most complete power monitoring product line. Current Transformers are essential components designed to be used with Schneider Electric's extensive power monitoring product portfolio. From simple energy meters to world class power quality meters, these proven products satisfy any requirement.

Solid core CTs

PB112446

METSECT5CCxxx

PB112460

METSECT5MAxxx

PB112456

METSECT5DCxxx

PB112467

METSECT5VVxxx

Split core CTs

PB119872

METSECT5HAxxx

PB119862

METSECT5GAxxx

PB119868

METSECT5GJxxx

PB119876

METSECT5HJxxx

Solid Core CTs

These current transformers from Schneider Electric are a comprehensive offer, ideally suited throughout the entire low voltage network, from 40 A to 6000 A. They deliver secondary current (0-5 A) proportional to the current measured at the primary. They can be used in combination with measurement devices (switchboard instrumentation, Ammeters, kilowatt-hour meters, power-monitoring units, control relays etc.). CTs with low VA burden allows them to be used in combination of measurement equipments.

The solution for

- Perfect for new and existing installations and expansion projects in a variety of markets:
- Commercial buildings
- Industrial facilities
- Medical facilities
- Data centers
- Education
- Oil & Gas

Benefits

- Safety: sealable insulating cover
- Installation: on symmetrical DIN rail, on mounting plate, on busbar
- Well adapted CT as the accuracy class is better than rated accuracy
- Multiple secondary terminal options for different mounting profile
- Current Transformers for coaxial cable
- Current Transformers for vertical or horizontal bar
- Current Transformers for cable or bar profile
- Compact size suitable for different sizes of conductors
- Tropicalized rating for harsh environmental condition
- Adaptable for different conductor profile and primary current intensity

Features

- A broad selection of ratings: from 40 A to 6000 A Ip with 120% max. range
- Fully compatible with Schneider Electric's complete portfolio of industry leading metering products as well as Third Party measurement devices.
- Safety through sealable insulating cover
- Compliance with IEC measurement standards with accuracy class ranges from Class 0.5 to Class 3
- Higher safety factor during installation and for facility
- For indoor use

Conformity of standards

- BS / EN 61869-1:2009
- BS / EN 61869-2:2012
- BS / EN 63000:2018
- VDE 0414
- Green Premium Ecolabel
- CE / UKCA certified
- EAC, Metrology

Ip/5 A ratio

When the primary is energized, the measurement equipment nearly acts as a short circuit which keeps the secondary voltage very low. This voltage will increases significantly if the short circuit is removed. Hence, always keep the secondary circuit connected to low impedance path or current signal terminals of the measuring instrument.

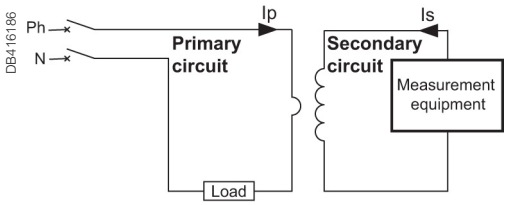

Application diagram of a CT.

Ip - Primary Current

CTs with multi secondary output

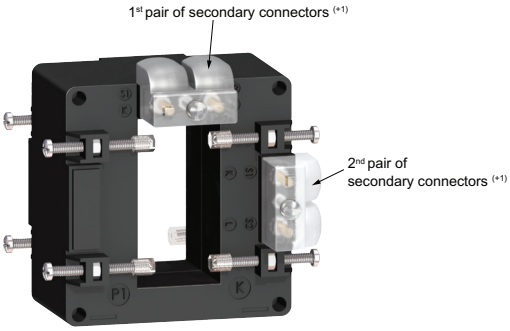

(+1) Two pairs of secondary connectors are provided (parallel internal wiring - only one secondary winding) for easier cable access. 1 lateral + 1 on one extremity.

Hence, only one pair of secondary connectors must be used at a time.

Solid Core CTs

CT selection - conductor rating aspects

- The choice depends on the conductor profile and the maximum intensity of the primary circuit.
- CTs are available in different form factors and sizes to meet varied applications

Primary current can be measured in two ways:

- CT with let-through primary
- CT with connection of primary by screws and nuts

CT with let-through primary

Conductor type	Cable	Mixed, bars or cables	Vertical or horizontal bars	Vertical bars
Suggested Current Transformer and mounting	DB415986 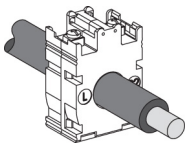	DB415920 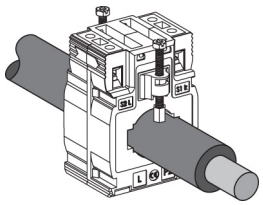 DB415921 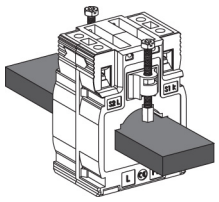	DB415988 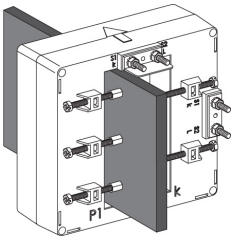 DB415987 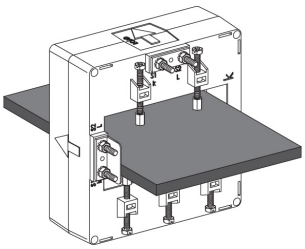	DB415989 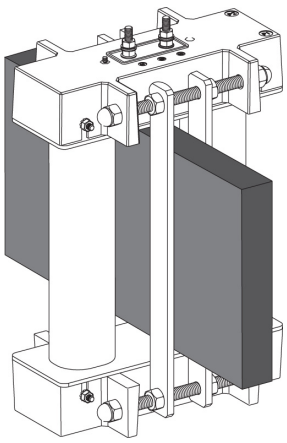
Ratings (A)	40 to 250	150 to 800	200 to 4000	5000 to 6000
CT internal	Type C	Type M	Type D (+1)	Type V
	FF C	FF MA FF MD	FF D 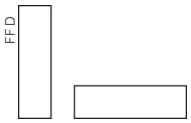	FF V2 VV

(+1) Two pairs of secondary connectors are provided (parallel internal wiring - only one secondary winding) for easier cable access. 1 lateral + 1 on one extremity. Hence, only one pair of secondary connectors must be used at a time.

Mounting method

CT Mounting

DB415926

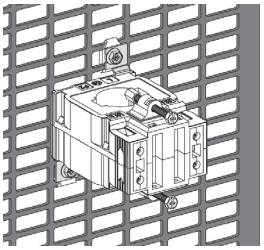

Panel mounting

DB415927

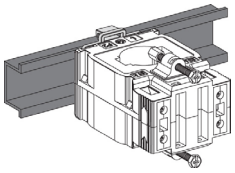

DIN rail mounting

Specific mounting: use of cylinder

A cylindrical metallic spacer ensures a proper CT positioning when the conductor or the CT cannot be positioned perpendicular. Secured by bolt + nut.

CT with primary connection by screw and nut
(example: use of cylinder with bar or cable)

DB416005

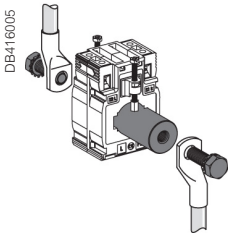

METSECT5CYL1 (aluminium)

DB416006

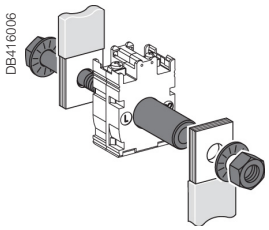

16550 (brass)

NOTE: This document is not intended to be used as an installation guide.

CT selection criterion - Electrical aspect of I primary (Ip)/5 A

- **We recommend that you choose the ratio immediately higher than the maximum load current.**
  Example: Maximum load current = 1103 A; ratio chosen = 1250/5 (Ip = 1250 or Inom = 1250).
- **For lower ratings:** From 40/5 to 75/5 and for an application with digital devices, we recommend that you choose the next higher rating of Ip, for example 50/5 for 40/5, 60/5 for 50/5, and so on.
- **Specific case of the motor starter:** to measure motor starter current, you must choose a CT with primary current Ip = Id/2 (Id = motor starting current).

Validation of measurement solution according to accuracy class

It consists in controlling the right adaptation of the CT on the accuracy class aspect. The accuracy class is specified in the project. The total dissipated power of the measurement circuit (meter + cables) should not be superior to the specified limit of the CT. This limit is for different standard classes. If necessary, the choice of the cable section, the CT or meter should be modified to fit the requirement.

Copper cable cross-section (mm²)	Approximate Power burden at 20 °C (VA)
1	1
1.5	0.685
2.5	0.41
4	0.254
6	0.169
10	0.0975
16	0.062

For each temperature variation per 10 °C bracket, the power drawn up by the cables increases by 4 %.

Schneider Electric make power monitoring device	Maximum VA burden at Nominal current (secondary) input (VA)
Analog Ammeter, form factor 72 x 72 mm / 96 x 96 mm	1.1
Digital ammeter	0.3
PM8000	0.15
PM3000 / iEM3200	0.3
PM5000 / PM2000	0.15
PM / EM1000H / EM64xxH	0.15

Application example

Project specification: **200 A**, in **Ø27** mm cable, accuracy class 1.
Our choice is METSECT5MA020.

For this CT selected on the chart (next page), the maximum VA burden is **7 VA** (for "Accuracy class 1" which is specified in the project).

Internal profile type	Cables (mm)	Bars (mm)	Rating Ip/5 A (A)	Commercial reference number	Accuracy class 0.5	1	3
					Max. power (VA)		
MA							
FF ME	Ø27	10 x 32	150	METSECT5MA015	3	4	-
		15 x 25	200	METSECT5MA020	4	7	-
			250	METSECT5MA025	6	8	-
			300	METSECT5MA030	8	10	-
			400	METSECT5MA040	10	12	-

Control of the conformity of the measurement chain:
- PM3000 multi-meter: 0.3 VA.
- 4 m length of 2.5 mm² cable: 0.41 x 4 = 1.64 VA.

Calculated burden: 0.3 + 1.64 = 1.94 VA (< 7 VA)

Conclusion: this CT is well adapted as the accuracy class will be even better than 1.

Typical limits of current error and phase displacement error for measuring current transformers (classes from 0.1 to 1)

Accuracy Class	± Percentage current (ratio) error at percentage of rated current shown below				± Phase displacement at percentage of rated current as shown below							
					Minutes				Centiradians			
	5	20	100	120	5	20	100	120	5	20	100	120
0.1	0.4	0.2	0.1	0.1	15	8	5	5	0.45	0.24	0.15	0.15
0.2	0.75	0.35	0.2	0.2	30	15	10	10	0.9	0.45	0.3	0.3
0.5	1.5	0.75	0.5	0.5	90	45	30	30	2.7	1.35	0.9	0.9
1.0	3.0	1.5	1.0	1.0	180	90	60	60	5.4	2.7	1.8	1.8

Solid Core CTs

Type C

PB112446

METSECT5CCxxx

Type V

PB112467

METSECT5VVxxx

Type M

PB112461

METSECT5MBxxx

PB112460

METSECT5MAxxx

PB112462

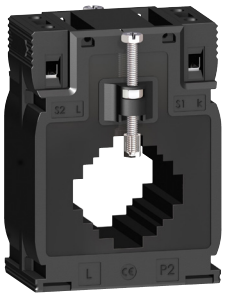

METSECT5MCxxx

PB112463

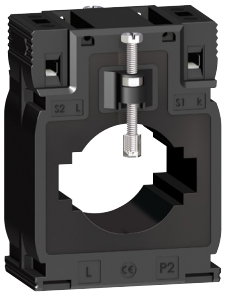

METSECT5MDxxx

General characteristics

Secondary current Is (A)	5 A (S1- S2 terminals, multiple secondary terminal options for different mounting profile)
Maximum voltage rating Ue (V)	720 V
Dielectric strength test	3 kV, 50 Hz for one minute
Frequency (Hz)	50/60 Hz nominal (47 - 63 Hz)
Instrument security/ safety factor (FS/sf)	40 to 4000 A: FS ≤ 5 5000 to 6000 A: FS ≤ 10
Rated short time thermal current (I*th*)	60 times the Ip current for 1 s (max 60 kA)
Rated dynamic current (I*dyn*)	2.5 I*th*
Degree of protection	IP20
Operating temperature	Tropicalised range: -25 to 60 °C (for Ip up to 1000 A), -25 to 50 °C (for Ip 1250 A up to 6000A) Relative humidity - 5 % to 95 %
Storage temperature	-40°C to +85°C
Compliance with standards	BS / EN 61869-1:2009, BS / EN 61869-2:2012, BS / EN 63000:2018 VDE 0414
Secondary connection (as per model)	by terminals for lug or by tunnel terminals or by screws
Pollution degree	2
Installation category	III
Insulation class	B
Altitude	≤ 3000 m (9843 ft)

Type D

PB112454

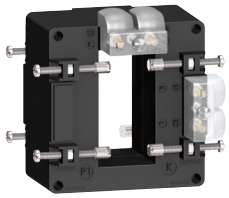

METSECT5DAxxx

PB112457

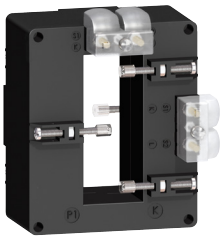

METSECT5DDxxx

PB112455

METSECT5DBxxx

PB112456

METSECT5DCxxx

PB112458

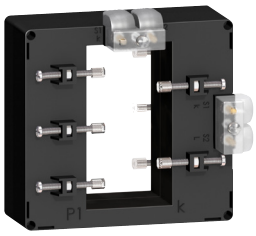

METSECT5DExxx

PB112459

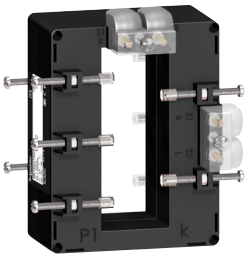

METSECT5DHxxx

Solid Core CTs

Representation of commercial reference numbers for CTs

MET SE CT X XX XXX

- X: 1 = 1 Amp; 5 = 5 Amp; R = Rogowski
- XX: 2 letters = Form Factor
- XXX: Last 3 digits = Primary rating/10 (Rounded off to next digit)

Examples:

Solid core
METSECT5CC008
CT - Current transformer
5 - 5 A CT secondary
CC - Form factor suitable for Coaxial cable (round) only
008 - 75 A primary rating, divide by 10

Split core
METSECT5GA020
CT - Current transformer
5 - 5 A CT secondary
GA - Form factor suitable for bus bars of max. size 23 x 33 mm
020 - 200 A primary rating, divide by 10

Rogowski coil
METSECTR30500
CT - Current transformer
R - Rogowski coil
30 - 300 mm coil length
500 - Primary current 5000 A, multiply by 10

Commercial reference scheme

CT with let-through primary	CT internal type	Internal profile type and dimension in mm	Fastening mode	Ip/5 A rating (A)(+1)	Accuracy class VA rating 0.5	1	3	CT Commercial reference	Accessories commercial reference: Cylinder	Sealable cover
Type C - solid-core CT (cable profile)										
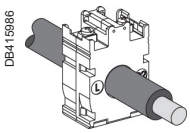 DB415986	CC	FF CC Ø21	• Adapter for DIN rails • Mounting plate	40	-	-	1	METSECT5CC004	METSECT5CYL1	Included
				50	-	1.25	1.5	METSECT5CC005		
				60	-	1.25	2	METSECT5CC006		
				75	-	1.5	2.5	METSECT5CC008		
				100	2	2.5	3.5	METSECT5CC010		
				125	2.5	3.5	4	METSECT5CC013		
				150	3	4	5	METSECT5CC015		
				200	4	5.5	6	METSECT5CC020		
				250	5	6	7	METSECT5CC025		
Type M - solid-core CT (mixed: cable/bar profile)										
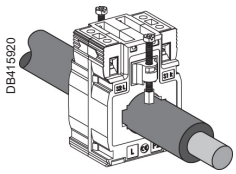 DB415920	MB	FF MB Ø26 12 x 40 15 x 32	• Adapter for DIN rails • Mounting plate	250	3	4	-	METSECT5MB025	-	METSECT5COVER
				300	4	6	-	METSECT5MB030		
				400	6	8	-	METSECT5MB040		
	MA	FF MA Ø27 10 x 32 15 x 25		150	3	5	-	METSECT5MA015	METSECT5CYL2	METSECT5COVER
				200	4	7	-	METSECT5MA020		
				250	6	8	-	METSECT5MA025		
				300	8	10	-	METSECT5MA030		
				400	10	12	-	METSECT5MA040		
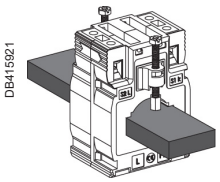 DB415921	MC	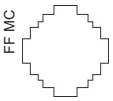 FF MC Ø32 10 x 40 20 x 32 25 x 25		250	3	5	-	METSECT5MC025	-	METSECT5COVER
				300	5	8	-	METSECT5MC030		
				400	8	10	-	METSECT5MC040		
				500	10	12	-	METSECT5MC050		
				600	12	15	-	METSECT5MC060		
				800	10	12	-	METSECT5MC080		
	MD	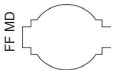 FF MD Ø40 10 x 50 20 x 40		500	4	6	-	METSECT5MD050	-	METSECT5COVER
				600	6	8	-	METSECT5MD060		
				800	10	12	-	METSECT5MD080		

(+1) Maximum rated current (Imax) is 120% of the primary current (Ip).

Please contact your Schneider Electric representative for complete ordering information.

Solid Core CTs

Commercial reference scheme (contd.)

CT with let-through primary	CT internal type	Internal profile type and dimension in mm	Fastening mode	Ip/5 A rating (A)(+1)	Accuracy class VA rating			CT Commercial reference	Accessories commercial reference	
					0.5	1	3		Cylinder	Sealable cover
Type D(+2) - solid-core CT (vertical or horizontal bar - dual secondary terminals)										
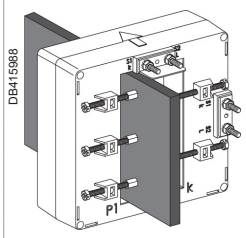	DA	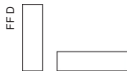 32 x 65	Insulated locking screw	400	4	8	-	METSECT5DA040	-	Included
				500	8	10	-	METSECT5DA050		
				600	8	12	-	METSECT5DA060		
				800	12	15	-	METSECT5DA080		
				1000	15	20	-	METSECT5DA100		
				1250	15	20	-	METSECT5DA125(+3)		
				1500	20	25	-	METSECT5DA150(+3)		
	DB	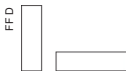 38 x 127	Insulated locking screw	1000	6	10	-	METSECT5DB100	-	Included
				1250	8	12	-	METSECT5DB125(+3)		
				1500	10	15	-	METSECT5DB150(+3)		
				2000	15	20	-	METSECT5DB200(+3)		
				2500	20	25	-	METSECT5DB250(+3)		
				3000	25	30	-	METSECT5DB300(+3)		
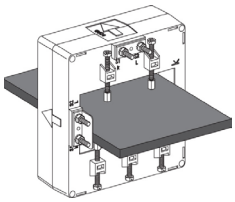	DC	52 x 127	Insulated locking screw	2000	25	30	-	METSECT5DC200(+3)	-	Included
				2500	30	50	-	METSECT5DC250(+3)		
				3000	30	50	-	METSECT5DC300(+3)		
				4000	30	50	-	METSECT5DC400(+3)		
	DD	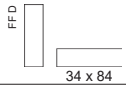 34 x 84	Insulated locking screw	1000	10	15	-	METSECT5DD100	-	Included
				1250	12	15	-	METSECT5DD125(+3)		
				1500	15	20	-	METSECT5DD150(+3)		
	DE	54 x 102	Insulated locking screw	1000	12	15	-	METSECT5DE100	-	Included
				1250	15	20	-	METSECT5DE125(+3)		
				1500	20	25	-	METSECT5DE150(+3)		
				2000	20	25	-	METSECT5DE200(+3)		
	DH	38 x 102	Insulated locking screw	1250	12	15	-	METSECT5DH125(+3)	-	Included
				1500	12	15	-	METSECT5DH150(+3)		
				2000	20	25	-	METSECT5DH200(+3)		
Type V - solid-core CT (vertical bar profile)										
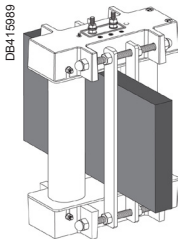	VV	55 x 165	Insulated locking screw	5000	60	-	-	METSECT5VV500(+3)	-	Included
				6000	70	-	-	METSECT5VV600(+3)		

(+1) Maximum rated current (Imax) is 120% of the primary current (Ip).
(+2) Two pairs of secondary connectors are provided (parallel internal wiring - only one secondary winding) for easier cable access. One lateral and one on extremity. Hence, only one pair of secondary connector must be used at a time.
(+3) Operating temperature: -25 to +50 °C (-13 to +122 °F)

Please contact your Schneider Electric representative for complete ordering information.

Solid core CT dimensions

CC internal profile type

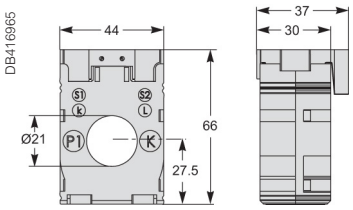

MB internal profile type

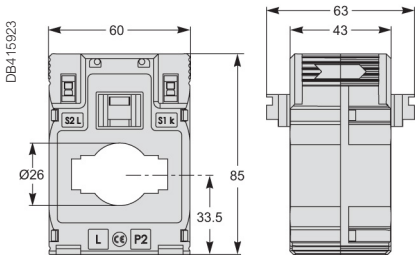

MA internal profile type

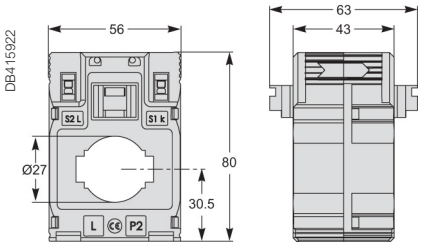

MC internal profile type

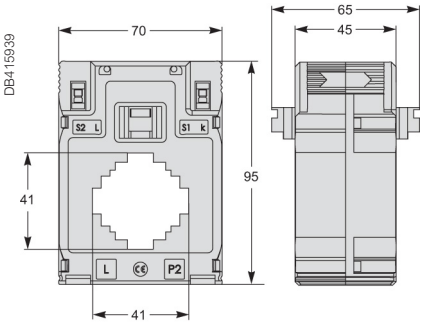

MD internal profile type

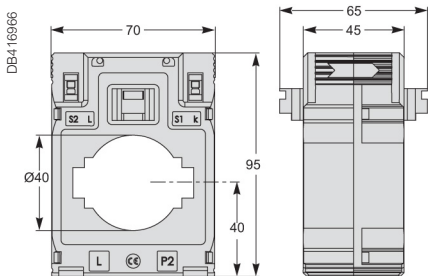

DA internal profile type

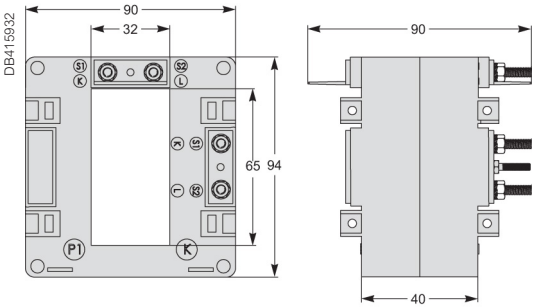

DB internal profile type

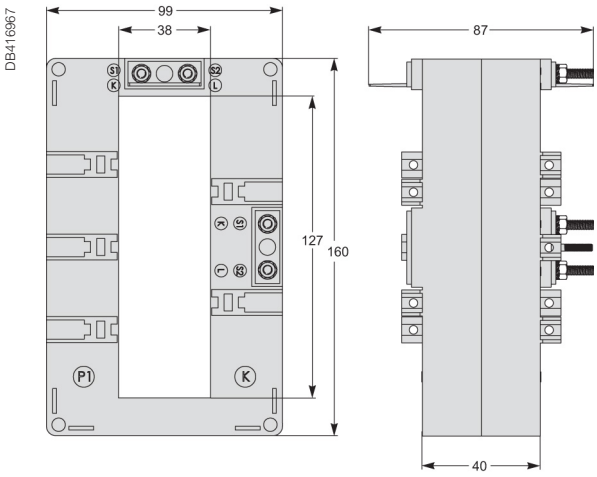

DC internal profile type

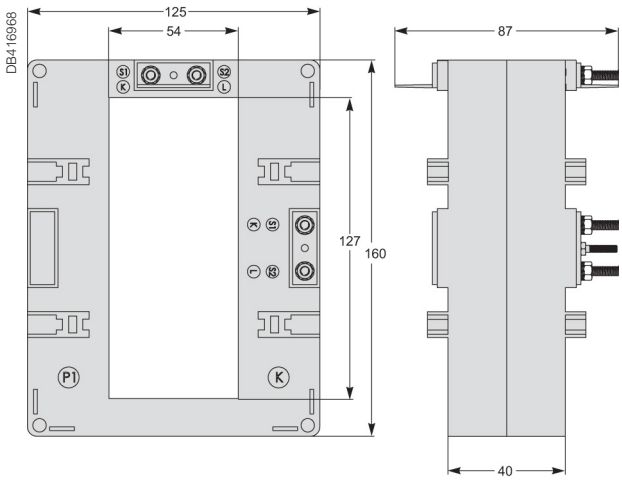

Solid core CT dimensions contd.

DD internal profile type

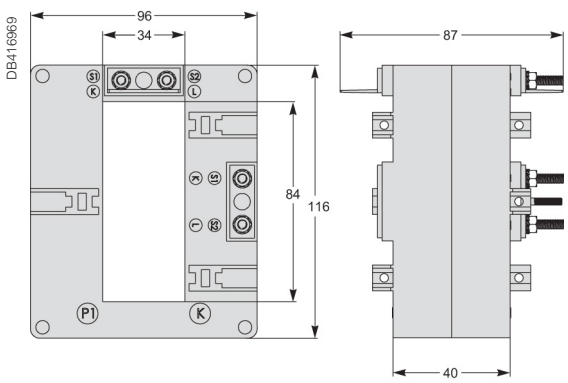

DE internal profile type

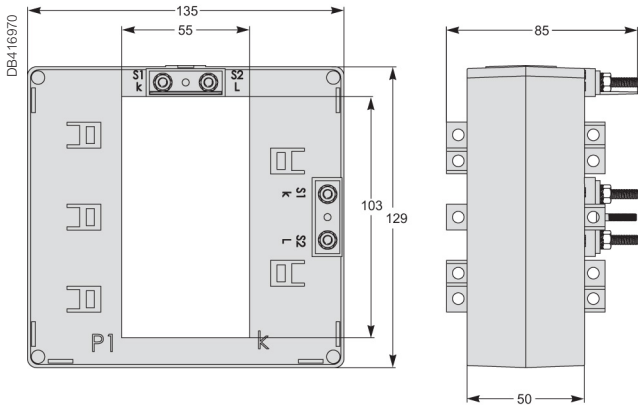

DH internal profile type

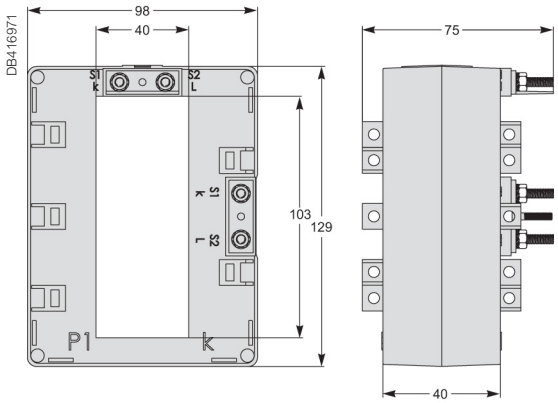

VV internal profile type

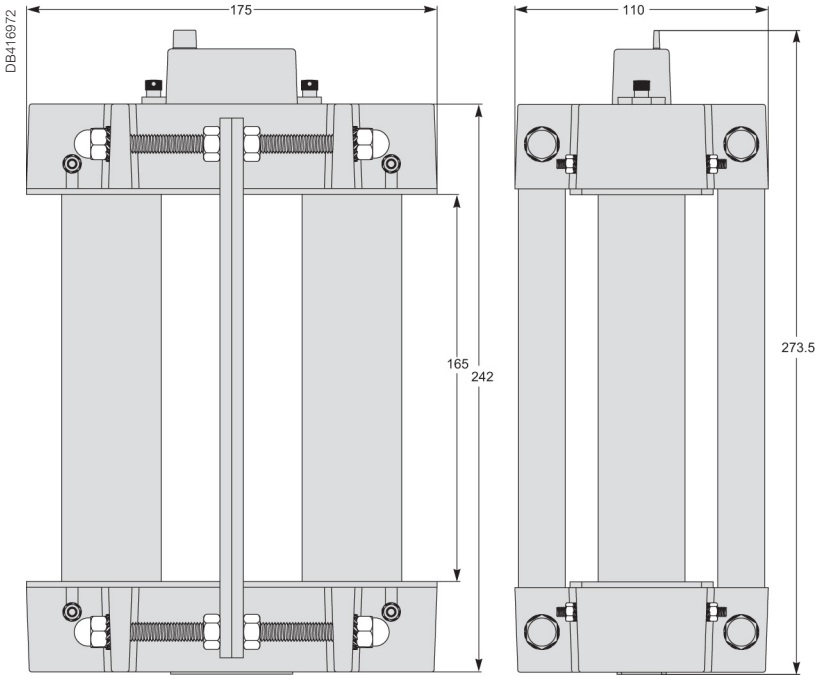

Solid core cylinders dimensions

Cylinders

METSECT5CYL1

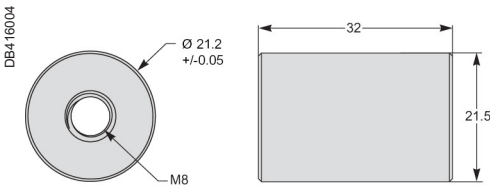

Aluminium

METSECT5CYL2

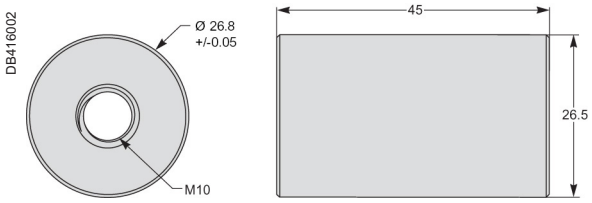

Aluminium

16550

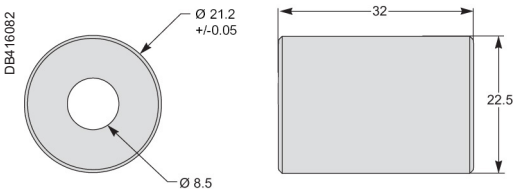

Brass

16551

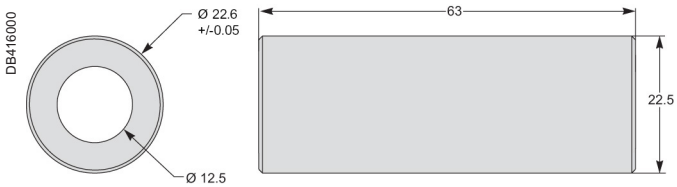

Brass

Covers

METSECT5COVER

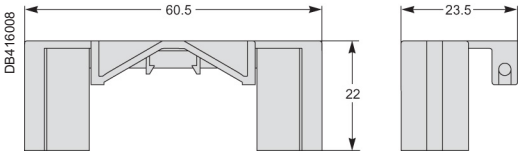

See the appropriate **Installation Guide** for correct installation instructions.

Split core CTs

These current transformers from Schneider Electric are a comprehensive offer, ideally suited throughout the entire low voltage network, from 100 A to 4000 A. They deliver secondary current (0-5 A) proportional to the current measured at the primary. They can be used in combination with measurement devices (switchboard instrumentation, Ammeters, kilowatt-hour meters, power-monitoring units, control relays etc.). CTs with low VA burden allows them to be used in combination of measurement equipments.

The solution for

- Perfect for new and existing installations and expansion projects in a variety of markets:
- Commercial buildings
- Industrial facilities
- Medical facilities
- Data centers
- Education
- Oil & Gas

Benefits

- Installation: on symmetrical DIN rail, on mounting plate, on busbar
- Well adapted CT as the accuracy class is better than rated accuracy
- Current Transformers for coaxial cable (input range 100 A to 1000 A)
- Current Transformers for bus bar (input range 100 A to 4000 A)
- Current Transformers for cable or bar profile
- Compact size suitable for different sizes of conductors
- Tropicalized rating for harsh environmental condition
- Adaptable for different conductor profile and primary current intensity

Ip/5 A ratio

When the primary is energized, the measurement equipment nearly acts as a short circuit which keeps the secondary voltage very low. This voltage will increases significantly if the short circuit is removed. Hence, always keep the secondary circuit connected to low impedance path or current signal terminals of the measuring instrument.

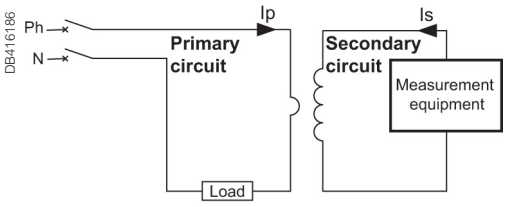

Application diagram of a CT.
Ip - Primary Current

Features

- A broad selection of ratings: from 100 A to 4000 A Ip with 120% max. range
- Split core design allows for CT installation without the need to uninstall and reinstall power conductor
- The split core CTs are designed for easy fit and assembly into existing installations, without separating the primary conductor.
- Click-system and fixing clasps allow single-handed mounting
- Fully compatible with Schneider Electric's complete portfolio of industry leading metering products as well as Third Party measurement devices.
- Safety through sealable insulating cover
- Compliance with IEC measurement standards with accuracy class ranges from Class 0.5 to Class 3
- Higher safety factor during installation and for facility
- For indoor use

Conformity of standards

- BS / EN 61869-1:2009
- BS / EN 61869-2:2012
- BS / EN 63000:2018
- VDE 0414
- Green Premium Ecolabel
- CE / UKCA certified
- EAC, Metrology

Split Core CTs

Mounting method

CT Mounting

DB445254

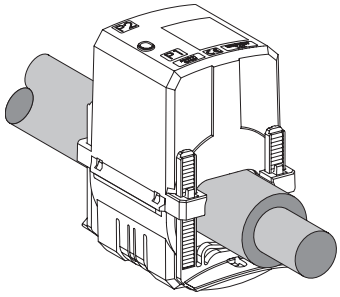

Type H

DB445255

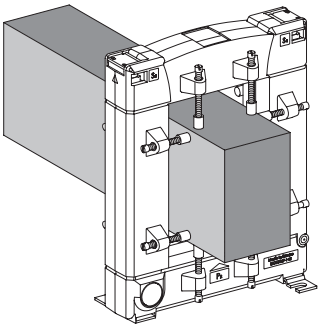

Type G

General characteristics

Secondary current Is (A)	5 A (S1- S2 terminals)
Maximum voltage rating Ue (V)	720 V
Dielectric strength test	3 kV, 50 Hz for one minute
Frequency (Hz)	50/60 Hz nominal (47 - 63 Hz)
Instrument security/ safety factor (FS/sf)	up to 1000 A: FS ≤ 5 ≥1000 A: FS ≤ 10
Rated short time thermal current (I*th*)	60 times the Ip current for 1 s (max 60 kA)
Rated dynamic current (I*dyn*)	2.5 I*th*
Degree of protection	IP20
Operating temperature	Tropicalised range: -5 to +60 °C Relative humidity: 5 % to 85 %
Storage temperature	-25°C to +70°C
Compliance with standards	BS / EN 61869-1:2009, BS / EN 61869-2:2012, BS / EN 63000:2018 VDE 0414
Secondary connection (as per model)	by terminals for lug or by tunnel terminals or by screws
Pollution degree	2
Installation category	III
Insulation class	E
Altitude	≤ 3000 m (9843 ft)

Type H

PB119872

METSECT5HAxxx

PB119872

METSECT5HDxxx

PB119874

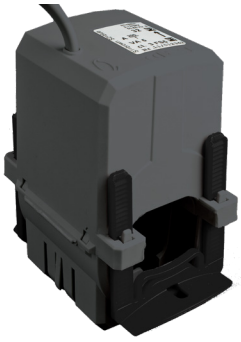

METSECT5HGxxx

PB119876

METSECT5HJxxx

PB119878

METSECT5HMxxx

PB119874

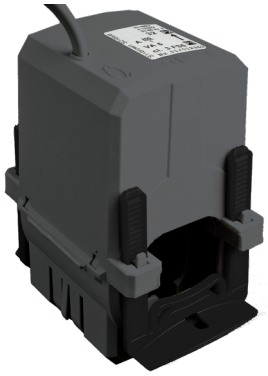

METSECT5HPxxx

Split Core CTs

Type G

PB119862

METSECT5GAxxx

PB119864

METSECT5GDxxx

PB119866

METSECT5GGxxx

PB119868

METSECT5GJxxx

Commercial reference scheme

CT with let-through primary	CT internal type	Internal profile type and dimension in mm	Ip/5 A rating (A)(+1)	Accuracy class VA rating			CT Commercial reference
				0.5	1	3	
Type G - split core CT (bus bar)							
PB119862	GA	FF V2 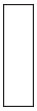 23 x 33	100	-	-	1.25	METSECT5GA010
			150	-	-	1.5	METSECT5GA015
			200	-	-	2.5	METSECT5GA020
			250	-	1.5	-	METSECT5GA025
			300	-	3.75	-	METSECT5GA030
			400	1	-	-	METSECT5GA040
PB119864	GD	FF V2 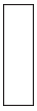 55 x 85	250	-	1.5	-	METSECT5GD025
			300	-	2.5	-	METSECT5GD030
			400	1	-	-	METSECT5GD040
			500	2.5	-	-	METSECT5GD050
			600	2.5	-	-	METSECT5GD060
			750	2.5	-	-	METSECT5GD075
			800	2.5	-	-	METSECT5GD080
			1000	5	-	-	METSECT5GD100
PB119866	GG	FF V2 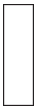 85 x 125	250	-	1.5	-	METSECT5GG025
			300	-	2.5	-	METSECT5GG030
			400	-	2.5	-	METSECT5GG040
			500	2.5	-	-	METSECT5GG050
			600	2.5	-	-	METSECT5GG060
			750	2.5	-	-	METSECT5GG075
			800	2.5	-	-	METSECT5GG080
			1000	5	-	-	METSECT5GG100
			1200	5	-	-	METSECT5GG120
			1250	7.5	-	-	METSECT5GG125
			1500	7.5	-	-	METSECT5GG150
PB119868	GJ	FF V2 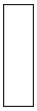 85 x 165	1000	10	-	-	METSECT5GJ100
			1200	10	-	-	METSECT5GJ120
			1500	10	-	-	METSECT5GJ150
			1600	10	-	-	METSECT5GJ160
			2000	10	-	-	METSECT5GJ200
			2500	10	-	-	METSECT5GJ250
			3000	15	-	-	METSECT5GJ300
			4000	15	-	-	METSECT5GJ400

(+1) Maximum rated current (Imax) is 120% of the primary current (Ip).

Split Core CTs

Commercial reference scheme (contd.)

CT with let-through primary	CT internal type	Internal profile type and dimension in mm	Ip/5 A rating (A)(*1)	Accuracy class VA rating			CT Commercial reference
				0.5	1	3	
Type H - split core CT (cable)							
PB119872	HA	18.4 x 19	150	-	1	-	METSECT5HA015
			200	-	1.5	-	METSECT5HA020
			250	1	-	-	METSECT5HA025
	HD	27.9 x 27	250	-	1	-	METSECT5HD025
			300	-	1.5	-	METSECT5HD030
			400	-	2.5	-	METSECT5HD040
			500	1	-	-	METSECT5HD050
PB119874	HG	Ø32.5	100	-	-	1.5	METSECT5HG010
			125	-	-	2.5	METSECT5HG013
			150	-	-	3	METSECT5HG015
			200	-	-	3	METSECT5HG020
			250	-	-	3	METSECT5HG025
			300	-	2.5	-	METSECT5HG030
			400	-	5	-	METSECT5HG040
			500	-	5	-	METSECT5HG050
			600	-	5	-	METSECT5HG060
PB119876	HJ	42.4 x 43	300	-	2.5	-	METSECT5HJ030
			400	-	5	-	METSECT5HJ040
			500	-	5	-	METSECT5HJ050
			600	2.5	-	-	METSECT5HJ060
			750	2.5	-	-	METSECT5HJ075
			800	2.5	-	-	METSECT5HJ080
PB119878	HM	42.4 x 85	300	-	2.5	-	METSECT5HM030
			400	-	5	-	METSECT5HM040
			500	-	5	-	METSECT5HM050
			600	2.5	-	-	METSECT5HM060
			750	2.5	-	-	METSECT5HM075
			800	2.5	-	-	METSECT5HM080
PB119874 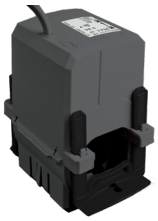	HP	Ø44	250	-	1.5	-	METSECT5HP025
			300	-	2.5	-	METSECT5HP030
			400	-	5	-	METSECT5HP040
			500	-	5	-	METSECT5HP050
			600	-	5	-	METSECT5HP060
			750	-	5	-	METSECT5HP075
			800	-	5	-	METSECT5HP080
			1000	-	5	-	METSECT5HP100

* Maximum rated current (Imax) is 120% of the primary current (Ip).

Please contact your Schneider Electric representative for complete ordering information.

Split core CT dimensions

Gx products

GA Dimensions

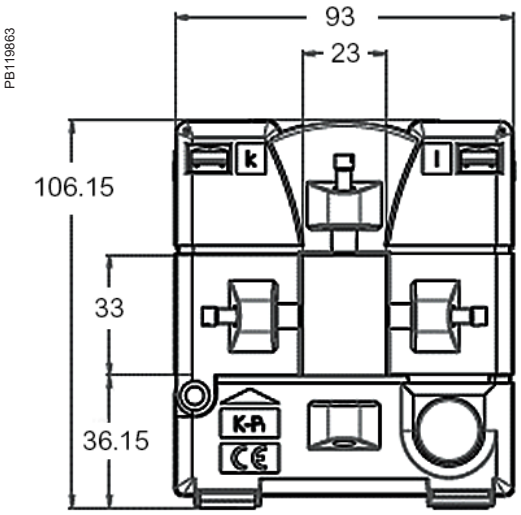

GD Dimensions

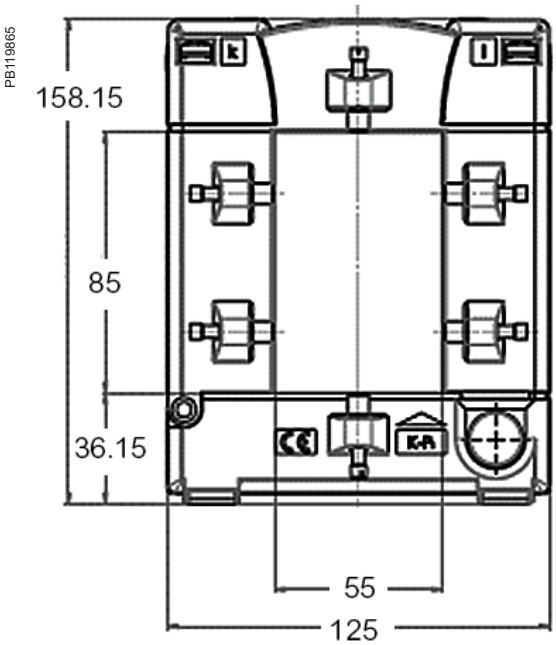

GG Dimensions

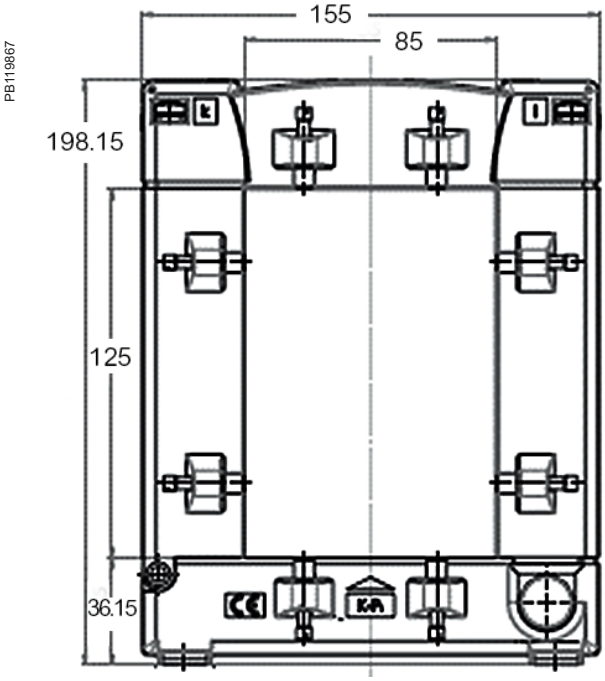

GJ Dimensions

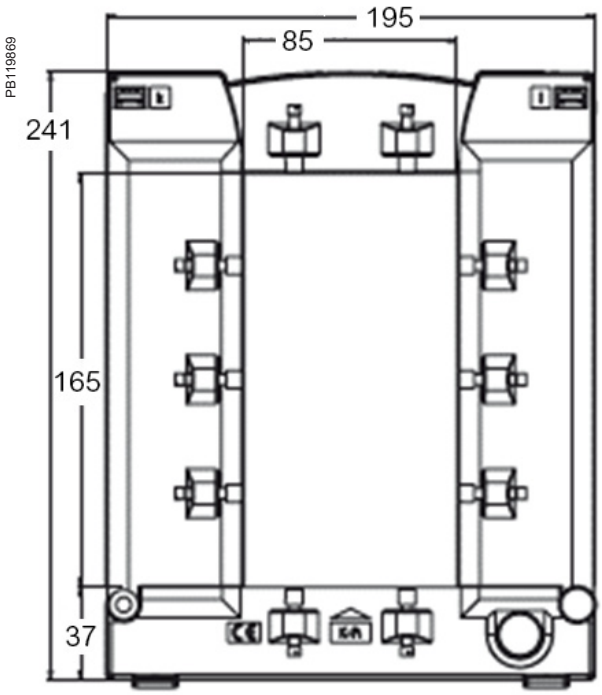

Split core CT dimensions (contd.)

Hx products

HA Dimensions

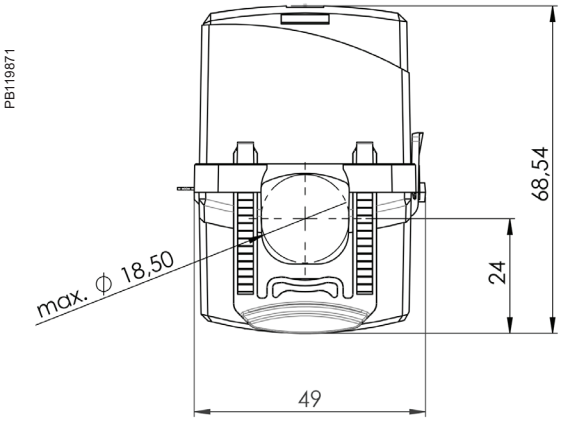

HD Dimensions

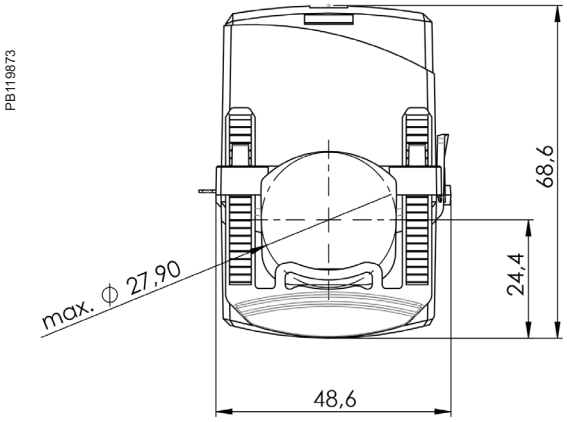

HG Dimensions

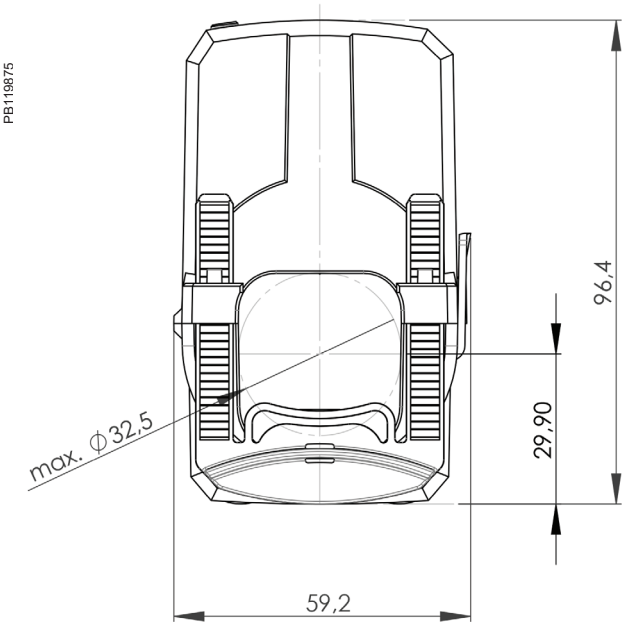

HJ Dimensions

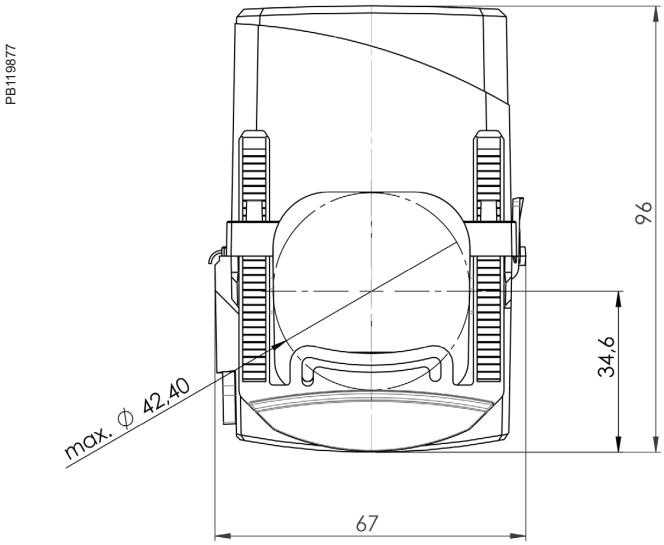

Split core CT dimensions (contd.)

Hx products

HM Dimensions

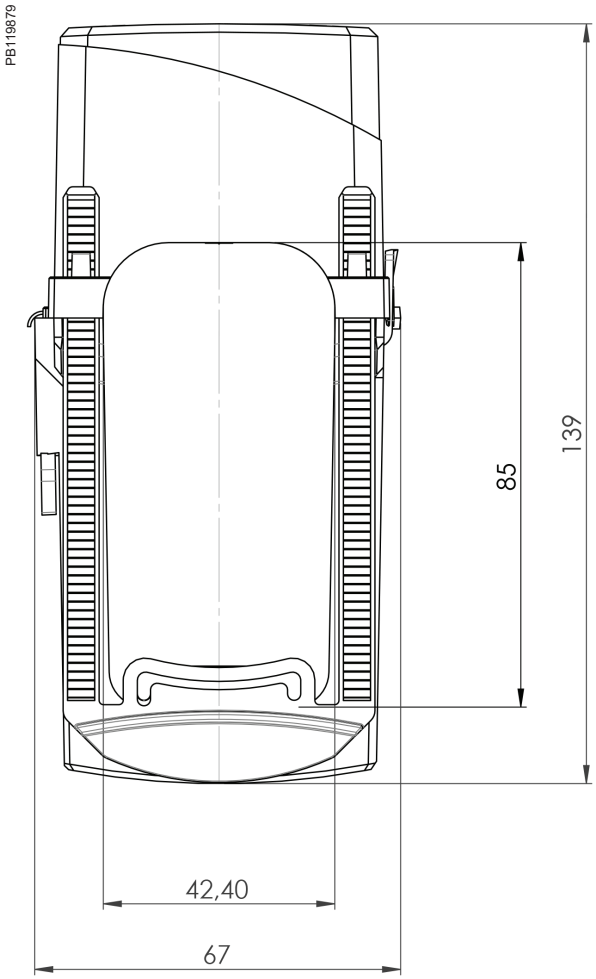

HP Dimensions

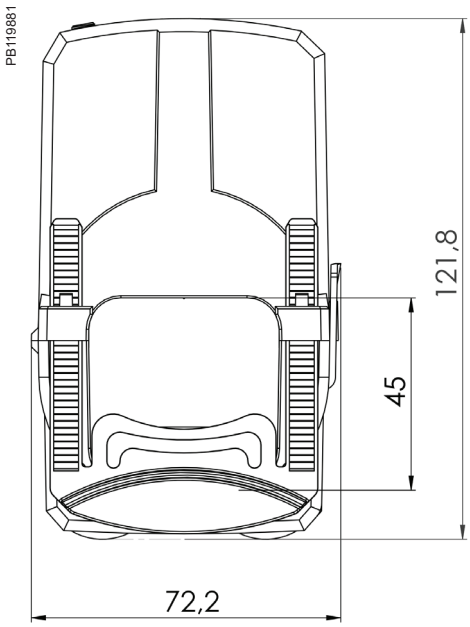

See the appropriate **Installation Guide** for correct installation instructions.

METSECTRx Series Rogowski Current Transducers

Schneider Electric is the global specialist in energy management with the most complete power monitoring product line. From simple indicators (analogue meters) and CTs, to world class energy meters and powerful compact power meters, these proven products satisfy any requirement.
Applications
Schneider Electric currently offers four proven models of PowerLogic™ Rogowski flexible core current transformers. These are available from 300 mm to 900 mm in length operating in a current range of 50 to 5000 A.

PB118060

METSECTRx Series Rogowski Current Transducers

The CTRx Series of Rogowski flexible rope style current transducers (CTs) provide secondary AC voltage proportional to the primary (sensed) current. Recommended to use with Schneider make EM35xxA, iEM35x5 and EM42xx series power meters.
The CTRx Series CTs provide a cost-effective means to transform electrical service amperages to a voltage compatible with monitoring equipment. The flexible core makes it easy to fit in tight enclosures. These products provide reinforced insulation between the sensed conductor and the output leads.

Technical specification

Specification for commercial reference	METSECTR25500, METSECTR30500, METSECTR46500, METSECTR60500, METSECTR90500
Range	PowerLogic™
Product or component type	Current transducer
Accessory / part category	Measurement accessory
Range compatibility	PowerLogic™ EM3500 - EM3555A EM3502A EM3560 EM3550A EM3560 EM3561A PowerLogic™ EM4200 - EM4236 EM4235 Acti9 iEM3000 - iEM3555 iEM3565
Current transformer type	Flexible core
Specification	
Connecting cable - flying lead	2.4 m 600 V AC max, voltage L-N sensed conductor
Connecting cable specification	1000 V AC UL style 21223 cable with 22 AWG leads
Coil current range	50 A to 5000 A
Network frequency of coil	50/60 Hz
Measurement accuracy of coil	±1 % from 50 A to 5000 A
Installation category of coil	600 V AC Cat IV
Pollution degree of coil	2
Environmental characteristics	
Standards	EN61010-1; UL61010-1; EN61010-2-032; UL61010-2-032, CAN/CSA-C22.2 No. 61010-1
Product certifications	CURus, UL recognized
Ambient air temperature for operation	-15 °C to 60 °C
Ambient air temperature for storage	-40 °C to 70 °C
Humidity range	0 to 95 % non-condensing
Altitude	2000 m max.
Protection degree	IP67
Commercial Reference Numbers	
METSECTR25500	PowerLogic™ Rogowski current transducers, 250 mm CT core length, 80 mm dia. CT, rope, 600 V AC, 5 kA
METSECTR30500	PowerLogic™ Rogowski current transducers, 300 mm CT core length, 96 mm dia. CT, rope, 600 V AC, 5 kA
METSECTR46500	PowerLogic™ Rogowski current transducers, 460 mm CT core length, 146 mm dia. CT, rope, 600 V AC, 5 kA
METSECTR60500	PowerLogic™ Rogowski current transducers, 600 mm CT core length, 191 mm dia. CT, rope, 600 V AC, 5 kA
METSECTR90500	PowerLogic™ Rogowski current transducers, 900 mm CT core length, 287 mm dia. CT, rope, 600 V AC, 5 kA

Please contact your Schneider Electric representative for complete ordering information.

Rogowski Current Transducers Dimensions

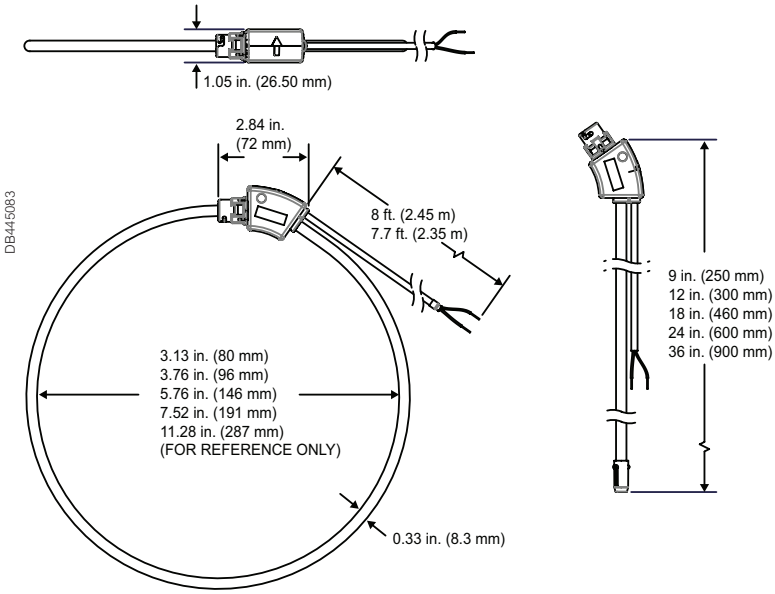

Dimensions	CT core thickness	CT core length (open)	Diameter (closed)
METSECTR25500	8 mm dia.	250 mm	80 mm
METSECTR30500	8 mm dia.	300 mm	96 mm
METSECTR46500	8 mm dia.	460 mm	146 mm
METSECTR60500	8 mm dia.	600 mm	191 mm
METSECTR90500	8 mm dia.	900 mm	287 mm

See the appropriate **Installation Guide** for correct installation instructions.

Panel Instruments

Schneider Electric panel instruments reliably comply with the most stringent standards, including IEC, EMI/EMC and safety, and we thoroughly test all products with recognized, third-party laboratories.

Our products are simple to install, configure, and use. This saves our partners time and money and lets them deliver the best solutions in a timely and cost-effective manner.

Whatever the size or type of application, the PowerLogic™ product line is an integral part of smart panels.

Analog Voltmeters and Ammeters are available in different form factors, panel mount 96 x 96 mm and 72 x 72 mm, DIN rail mount types.

Digital Voltmeters and Ammeters are available in DIN rail form factor.

Selector switches for selecting different line voltages and line current.

Hour counters for counting the operating hours of machineries.

DB119006

16029

PB101118

16003

PB112024

15202

PB107119

15126

PB112026

15440

iAMP

16029

iVLT

16061

Function

iAMP

Ammeters measure the current flowing through an electric circuit in amps.

iVLT

Voltmeters measure the potential (voltage) difference of an electric circuit in volts.

Common technical data

- Accuracy: Class 1.5
- Complies with standards IEC 60051-1, IEC 61010-1 and IEC 61000-4
- Ferromagnetic device
- Pseudo-linear scale over 90°
- Ammeters (except catalog number 16029):
  - connection on CT, ratio In/5, to be ordered separately interchangeable dials
- Temperature:
  - operating temperature: -25 °C to 55 °C
  - reference temperature: 23 °C
- Influence of temperature on accuracy: ±0.03 %/°C
- Utilisation frequency: 50 Hz to 60 Hz
- Consumption:
  - AMP: 1.1 VA
  - VLT catalog number 15060: 2.5 VA
  - VLT catalog number 16061: 3.5 VA
- Permanent overload:
  - AMP: 1.2 In
  - VLT: 1.2 Un
- Maximum overload for 5 s:
  - AMP: 10 In
  - VLT: 2 Un
- Connection: tunnel terminals for 1.5 to 6 mm² rigid cables

Commercial reference numbers

Type	Scale	Connection with CT	Width in mod. of 9 mm	Comm. ref. no.
iAMP with direct connection				
	0-30 A	no	8	16029
iAMP with connection on CT				
Basic device (delivered without dial)		X/5	8	16030
Dial	0-5 A			
	0-50 A	50/5		16032
	0-75 A	75/5		16033
	0-100 A	100/5		16034
	0-150 A	150/5		16035
	0-200 A	200/5		16036
	0-250 A	250/5		16037
	0-300 A	300/5		16038
	0-400 A	400/5		16039
	0-500 A	500/5		16040
	0-600 A	600/5		16041
	0-800 A	800/5		16042
	0-1000 A	1000/5		16043
	0-1500 A	1500/5		16044
	0-2000 A	2000/5		16045
iVLT				
	0-300 V		8	16060
	0-500 V		8	16061

See your Schneider Electric representative for complete ordering information.

PB112024

iAMP

15202

PB112023

iVLT

15201

PB112025

iFRE

15208

Function

iAMP
Ammeters measure in amps the current flowing through an electric circuit.

iVLT
Voltmeters measure in volts the potential (voltage) difference of an electric circuit.

iFRE
Frequency meters measure in hertz the frequency of an electric circuit from 20 to 600 V AC.

Common technical data

- Supply voltage: 230 V AC
- Operating frequency: 50 Hz to 60 Hz
- Display by red LED: 3 digits, h = 8 mm (0.31 in)
- Accuracy at full-scale : 0.5 % ±1 digit.
- Consumption: max. 5 VA or rated 2.5 VA
- Degree of protection:
  - IP40 on front face
  - IP20 at terminal level
- Connection: tunnel terminals for 2.5 mm^2 cables

Specific data

10 A direct reading ammeter
- Minimum value measured: 4 % of rating
- Measurement input consumption: 1 VA

Multi-rating ammeter
- Ratings:
  - in direct reading: 5 A
  - by CT (not supplied) configurable on the front face of the ammeter: 10, 15, 20, 25, 40, 50, 60, 100, 150, 200, 250, 400, 500, 600, 800, 1000, 1500, 2000, 2500, 4000, 5000 A
- Minimum value measured: 4 % of rating
- Measurement input consumption: 0.55 VA

Voltmeter
- Direct measurement: 0...600 V AC
- Input impedance: 2 MW
- Minimum value measured: 4 % of rating

Frequency meter
- Minimum value measured: 20 Hz
- Maximum value measured: 100 Hz
- Full-scale display: 99.9 Hz

Compliance with standards
- Safety: IEC/EN 61010-1
- EMC electromagnetic compatibility: IEC/EN 65081-1 and IEC/EN 65082-2

Commercial reference numbers

Type	Scale	Connection with CT	Width in mod. of 9 mm	Comm. ref. no.
Direct reading iAMP				
	0-10 A	No	4	15202
Multi-rating iAMP				
	0-5000 A	As per rating	4	15209
iVLT				
	0-600 V		4	15201
iFRE				
	20-100 Hz		4	15208

See your Schneider Electric representative for complete ordering information.

AMP for standard feeder

16009

AMP for motor feeder

16006

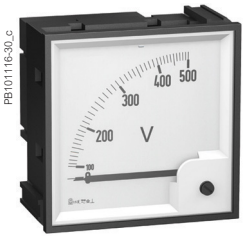

VLT

16005

Function

The 72 x 72 measurement devices are designed for flush-mounted installation on doors, wicket doors and front plates of enclosures and cubicles.

AMP

The ammeters measure in amps the current flowing through an electrical circuit.

VLT

The voltmeter measure in volts the potential difference (voltage) of an electrical circuit.

Common technical data

- Accuracy: Class 1.5
- Compliance with standard IEC 60051-1, IEC 61010-1 and IEC 61000-4
- Ferromagnetic device
- Scale length: 62 mm over 90°
- Mounting in enclosure or in cubicle
- Degree of protection: IP52
- Maximum operating position: 30° / vertical
- Temperature:
  - operation: -25 °C to 50 °C
  - reference: 23 °C
- Influence of temperature on accuracy: ±0.003 %/ °C
- Utilisation frequency: 50 Hz to 60 Hz

AMP specific technical data

- Needs a In/5 CT to be ordered separately
- Interchangeable dials to be ordered separately
- Consumption: 1.1 VA
- Permanent overload: 1.2 In
- Maximum overload for 5 s: 10 In

VLT specific technical data

- Consumption: 3 VA
- Permanent overload: 1.2 Un
- Maximum overload for 5 s: 2 Un

Commercial reference numbers

Type	Scale	Connection on CT	Comm. ref. no.
AMP for standard feeder			
Basic device (delivered without dial)		X/5	16004
1.3 In dial	0-50 A	50/5	16009
	0-100 A	100/5	16010
	0-200 A	200/5	16011
	0-400 A	400/5	16012
	0-600 A	600/5	16013
	0-1000 A	1000/5	16014
	0-1250 A	1250/5	16015
	0-1500 A	1500/5	16016
	0-2000 A	2000/5	16019
AMP for motor feeder			
Basic device (delivered without dial)		X/5	16003
3 In dial	0-30-90 A	30/5	16006
	0-75-225 A	75/5	16007
	0-200-600 A	200/5	16008
VLT			
	0-500 V		16005

See your Schneider Electric representative for complete ordering information.

AMP for standard feeder

16079

AMP for motor feeder

16076

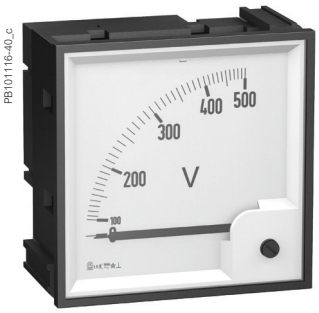

VLT

16075

Function

The 96 x 96 measurement devices are designed for flush-mounted installation on doors, wicket doors and front plates of enclosures and cubicles.

AMP

The ammeters measure in amps the current flowing through an electrical circuit.

VLT

The voltmeter measure in volts the potential difference (voltage) of an electrical circuit.

Common technical data

- Accuracy: class 1.5
- Compliance with standard IEC 60051-1, IEC 61010-1 and IEC 61000-4
- Ferromagnetic device
- Scale length: 80 mm over 90°
- Mounting in enclosure or in cubicle
- Degree of protection: IP52
- Maximum operating position: 30° / vertical
- Temperature:
  - operation: -25 °C to 50 °C
  - reference: 23 °C
- Influence of temperature on accuracy: ±0.003 % / °C
- Utilisation frequency: 50 Hz to 60 Hz

AMP specific technical data

- Needs a In/5 CT to be ordered separately
- Interchangeable dials to be ordered separately
- Consumption: 1.1 VA
- Permanent overload: 1.2 In
- Maximum overload for 5S: 10 In

VLT specific technical data

- Consumption: 3 VA
- Permanent overload: 1.2 Un
- Maximum overload for 5S: 2 Un

Commercial reference numbers

Type	Scale	Connection on CT	Comm. ref. no.
AMP for standard feeder			
Basic device (delivered without dial)		X/5	16074
1.3 In dial	0-50 A	50/5	16079
	0-100 A	100/5	16080
	0-200 A	200/5	16081
	0-400 A	400/5	16082
	0-600 A	600/5	16083
	0-1000 A	1000/5	16084
	0-1250 A	1250/5	16085
	0-1500 A	1500/5	16086
	0-2000 A	2000/5	16087
	0-2500 A	2500/5	16088
	0-3000 A	3000/5	16089
	0-4000 A	4000/5	16090
	0-5000 A	5000/5	16091
	0-6000 A	6000/5	16092
AMP for motor feeder			
Basic device (delivered without dial)		X/5	16073
3 In dial	0-30-90 A	30/5	16076
	0-75-225 A	75/5	16077
	0-200-600 A	200/5	16078
VLT			
	0-500 V		16075

See your Schneider Electric representative for complete ordering information.

Function

The 48 x 48 selector switches are designed for flush-mounted installation on doors, wicket doors and front plates of enclosures and cubicles.

CMA

The ammeter selector switch uses a single ammeter (by means of current transformers) for successive measurement of the currents of a three-phase circuit.

CMV

The voltmeter selector switch uses a single voltmeter for successive measurement of the voltages (phase-to-phase and phase-to-neutral) of a three-phase circuit.

Common technical data

- Durability:
  - electrical: 100,000 operations
  - mechanical: 2,000,000 operations
- AgNi contact
- Operating temperature: -25 °C to 50 °C
- Compliance with standards IEC/EN 60947-3
- Degree of protection:
  - IP65 on front face
  - IP20 at terminal level

Commercial reference numbers

Type	Rating (A)	Voltage (V)	Number of positions	Comm. ref. no.
CMA	20		4	16017
CMV		500	7	16018

See your Schneider Electric representative for complete ordering information.

Connection

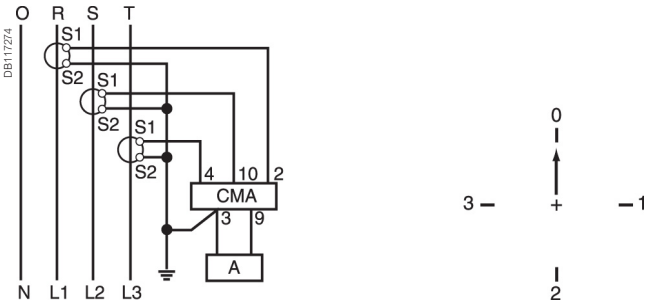

CMA

CMV

Reading 3 phase-to-earth voltages + 3 phase-to-phase voltages.

Note: when connecting do not remove the pre-cabling.
See appropriate Installation Guide for this product.

PB107119

15126

iCMA

PB107118

15125

iCMV

Function

iCMA

This 4-position ammeter selector switch uses a single ammeter (using current transformers) for successive measurement of the currents of a three-phase circuit.

iCMV

This 7-position voltmeter selector switch uses a single voltmeter for successive measurement of voltages (phase-to-phase and phase-to-neutral) of a three-phase circuit.

Common technical data

- Rotary handle
- Maximum operating voltage: 440 V, 50/60 Hz
- Nominal thermal current: 10 A
- Operating temperature: -20 °C to 55 °C
- Storage temperature: -25°C to 80°C
- Mechanical durability (AC21A-3 x 440 V): 2,000,000 operations
- Degree of protection:
  - IP66 on front face
  - IP20 at terminal level
- Electrical durability: 1,000,000 operations
- Connection: jumper terminals with captive screws, for cables up to 1.5 mm^2
- Complies with standards: IEC/EN 60947-3

Commercial reference numbers

Type	Rating (A)	Voltage (V AC)	Width in mod. of 9 mm	Comm. ref. no.
iCMA	10	415	4	15126
iCMV	10	415	4	15125

See your Schneider Electric representative for complete ordering information.

Connection

DB114272

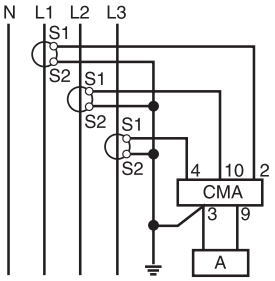

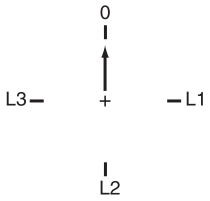

iCMA

DB114273

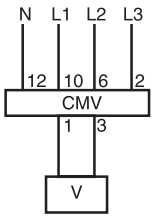

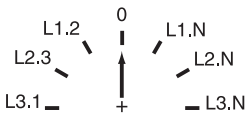

iCMV

See appropriate Installation Guide for this product.

iCH "DIN"

15440

CH "48 x 48"

15607

Function

Electromechanical counter that counts the operating hours of a machine or piece of electrical equipment. Giving a precise indication of operating time, the counter is used to decide when to carry out preventive maintenance.

Common technical data

- Electromechanical display
- Maximum display: 99999.99 hours
- Display accuracy: 0.01 %
- Without reset
- Storage temperature: -25 °C to 85 °C
- Connection: tunnel terminals for 2.5 mm2 cable

Specific technical data

iCH "DIN"

- Consumption: 0.15 VA
- Operating temperature: -10 °C to 70 °C
- Mounting on DIN rail

CH "48 x 48"

- Consumption:
  - 15607: 0.25 VA
  - 15608: 0.15 VA
  - 15609: 0.02 VA to 12 V and 0.3 VA to 36 V
- Operating temperature: -20 °C to 70 °C
- Degree of protection: IP65 on front face
- Mounting on front face of monitoring switchboards

Commercial reference numbers

Type	Voltage (V)	Width in mod. of 9 mm	Comm. ref. no.
iCH "DIN"	230 V AC ± 10 %/50 Hz	4	15440
CH "48 x 48"	24 V AC ± 10 %/50 Hz		15607
	230 V AC ± 10 %/50 Hz		15608
	12 to 36 V DC		15609

See your Schneider Electric representative for complete ordering information.

Connection

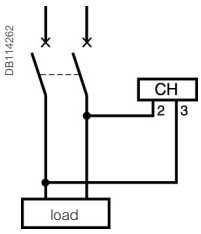

iCH "DIN"

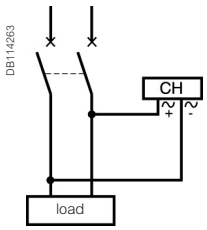

CH "48 x 48"

See appropriate Installation Guide for this product.

iCL.eps

15443

iCI impulse counter

Function

Electromechanical counter designed to count impulses emitted by: kilowatt-hour meters, temperature overrun detectors, people meters, speed meters, etc.

Common technical data

- Supply and metering voltage: 230 V AC ± 10 %, 50/60 Hz
- Consumption: 0.15 VA
- Maximum display: 9 999 999 impulses
- Without reset
- Metering data:
  - minimum impulse time: 50 ms
  - minimum time between 2 impulses: 50 ms
- Storage temperature: -25 °C to 85 °C
- Operating temperature: -10 °C to 70 °C
- Connection: tunnel terminals for 2.5 mm^2 cable

Commercial reference numbers

Type	Width in mod. of 9 mm	Comm. ref. no.
iCI	4	15443

Connection

DB114271

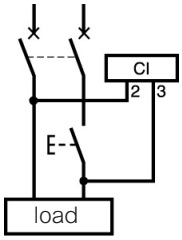

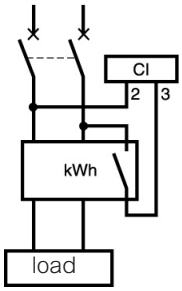

See appropriate Installation Guide for this product.

Analog ammeters and voltmeters iAMP, iVLT

DB103473

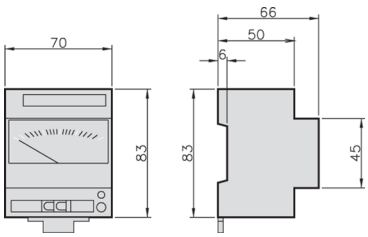

Digital ammeters, voltmeter and frequency meter iAMP, iVLT

DB103474

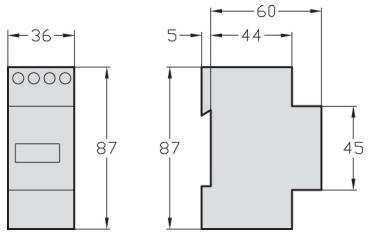

iCMA and iCMV selector switches

DB103475

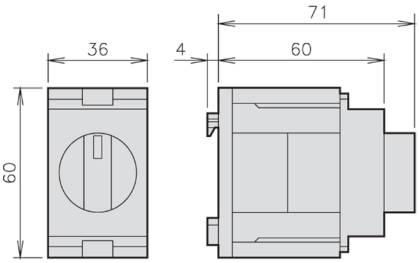

72 x 72 analog ammeters and voltmeter

DB103476

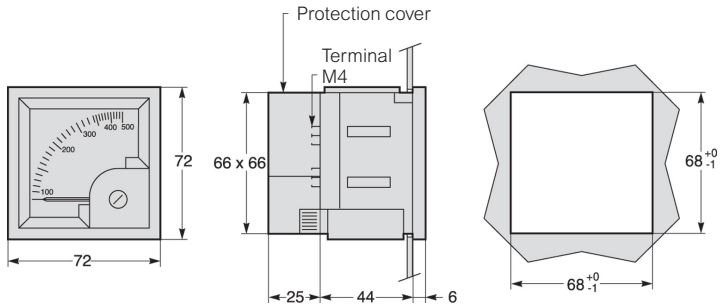

96 x 96 analog ammeters and voltmeter

DB103481

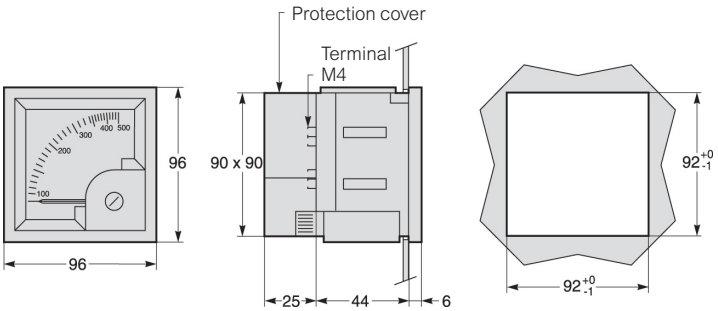

See the appropriate Installation Guide for this product.

48 x 48 CMA and CMV selector switches

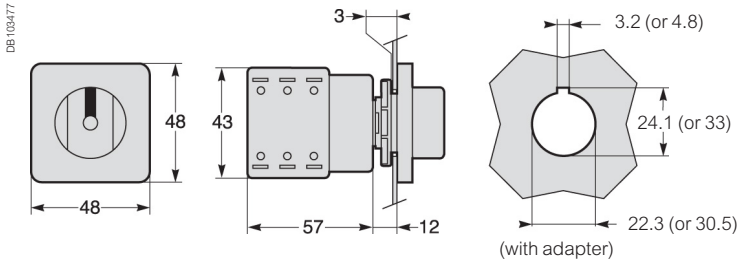

iCI impulse counter and iCH hour counter

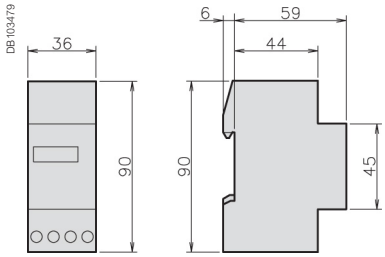

48 x 48 CH hour counters

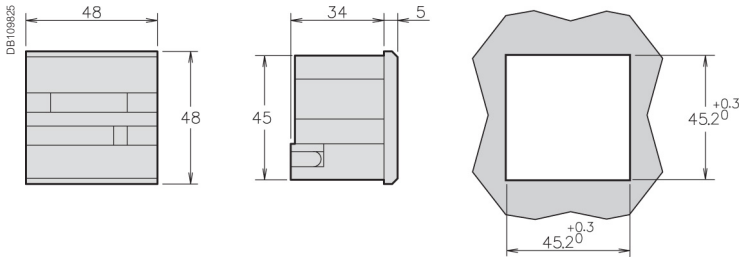

See the appropriate Installation Guide for this product.

Basic Energy Metering

Basic energy meters comply with a variety of applications: single-phase or three-phase circuits, basic kWh meters for elementary applications, to full-featured, dual tariff energy meters and power metering for network monitoring applications. Data is visible locally or accessible remotely. Wireless communication energy sensors with compact design allow to optimize panel size.

- PowerLogic™ iEM2000 series
- PowerLogic™ iEM2100 series
- PowerLogic™ iEM2400 series
- PowerLogic™ iEM3000 series
- PowerLogic™ PM3000 series
- PowerLogic™ PowerTag Energy series

PB108451

A9MEM2000

PB118059

A9MEM2055

PB118059

A9MEM2155

PB113702

A9MEM2435

PB108450

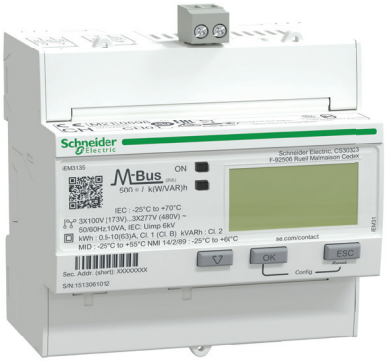

A9MEM3135

PB108450

METSEPM3250

A9MEM1580

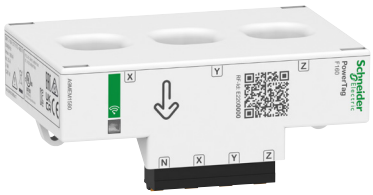

Acti9 iEM2xxx Range

iEM2000, iEM2100, iEM2400 series

The Acti9 iEM2xxx range energy meters offer a cost-attractive, competitive range of single-phase DIN rail-mounted energy meters ideal for sub-billing, cost allocation applications and support two protocols (Modbus RS-485 or M-Bus) that allow them to integrate seamlessly into any energy monitoring system.

Applications

- Monitor power consumption for each floor, office sector, unit or workshop with maximum current from 40 A, 45 A, 63 A and 100 A
- Allocate energy cost to lower cost of operations, optimise building's power efficiency
- Connect to power management software to take full advantage of the IoT digital power installation
- Various businesses, industrial and residential applications

PB108451

PB118059

PB118059

PB113702

A9MEM2000 A9MEM2055 A9MEM2155 A9MEM2435

The solution for:

All markets that can benefit from a solution that includes Acti9 PowerLogic™ iEM2000, iEM2100, iEM2400 series meters:

- Buildings
- Industry
- Data Centre & networks
- Infrastructures (airport, road tunnels, telecom...)

Benefits

The Acti9 PowerLogic™ iEM2xxx meters are economical and easy to install in panelboards and switchboards:

- DIN rail mounted, compact size
- Accurate data measurement with Class 1 accuracy for kWh and Class 2 accuracy for kVARh*
- Measures basic electrical parameters like voltage, current, frequency, power factor and power*

Energy management system:

To get the most effective use from your Schneider Electric measurement and metering devices, we offer a range of dedicated data loggers and gateways for your building energy management.

*in selected references.

Competitive advantages*

- Compact size - Compatible with Acti9 range, 18 mm width in iEM2000, 36 mm width in iEM2100 and iEM2400
- Display - available in displayless, electromech counter display or LCD display
- Communication - Pulse output, Modbus RS-485 or M-Bus communication port
- Self-powered, direct connect upto 100 A
- MID compliant providing certified accuracy and data security
- Four quadrant measurement
- Two tariffs
- Basic electrical parameter measurement eg. V, I, F, PF, PQS

Conformity of standards

- BS/EN/IEC 61557-12:2018/AMD1:2021*
- EN / IEC 62053-21
- EN / IEC 62053-23*
- EN 50470-1/3:2006*
- EN / IEC 62052-11
- IEC 62052-31:2015*
- BS / EN / IEC 61326-1
- BS / IEC / EN 61010-1
- CE and UKCA certified

iEM2xxx Range Feature selection

Functions	iEM2000T	iEM2000/iEM2010	iEM2050/ iEM2055	iEM2100/ iEM2105	iEM2110	iEM2135/ iEM2155	iEM2150	iEM2435/ iEM2455
40A Imax	■	■						
45A Imax			■					
63A Imax				■	■	■	■	
100A Imax								■
Communication port			RS-485			M-Bus (iEM2135) RS-485 (iEM2155)	RS-485	M-Bus (iEM2435) RS-485 (iEM2455)
Pulse output (Energy)	1	1 (iEM2010)	1	1 (iEM2105)	2			2
Digital inputs (Tariff switching)					1	1		
Display Type	No	Electromechanical Counter	LCD					
Width (mm)	18		17.5	36				35.7
Multi Tariff counter			2		2	2		2
Wh accuracy (IEC 62053-21)	Class 1							
Compliance to IEC 61557-12	■	■		■				
VARh accuracy (IEC 62053-23)	Class 2				Class 2			
4 Quadrants measurement			■		■			
MID Class B (EN 50470-3), 50 Hz		■	■ (iEM2055)		■	■		■
V A F PF			■		■			
Power (P Q S)			■		■			

See your Schneider Electric representative for complete ordering information.

Acti9 iEM2xxx Range technical specifications

iEM2000, iEM2100, iEM2400 series technical specifications

	iEM2000/ iEM2000T/ iEM2010	iEM2050/iEM2055	iEM2100/iEM2105	iEM2110/iEM2135/ iEM2150/iEM2155	iEM2435/iEM2455
Type of measurement	True rms for single-phase AC systems with direct connect/whole current measurement				
Max. current (Imax)	40 A	45 A	63 A	63 A	100 A
Basic current (Inom)	5 A		10 A	5 A	5 A
Starting current	40 mA	20 mA	40 mA	15 mA	20 mA
Voltage range (L-N)	184 to 276 V AC	195 to 253 V AC	207 to 253 V AC	184 to 276 V AC	195 to 253 V AC
Frequency range	50 Hz MID and IEC / 60 Hz IEC				
Max. KWh resolution	999999.9 kWh	9999.99 kWh to 99999.9 MWh	999.99 kWh/MWh	999999.99 kWh	9999.99 kWh to 99999.9 MWh
Pulse output	100 pulses/kWh (120 ms), 5...35 V DC, 1...20 mA (except iEM2000)	10000, 2000, 1000, 100, 10, 1, 0.1, 0.01 pulses/kWh (11.2 or 32 ms), 5...27 V DC, max 100 mA	1 pulse/kWh (200 ms), 18 mA at 24 V DC or 100 mA at 230 V AC (only for iEM2105)	1 to 1000 pulses/ kWh or kVARh (30 to 100 ms) (only for iEM2110)	10000, 2000, 1000, 100, 10, 1, 0.1, 0.01 pulses/kWh, (5...32 ms), 5...27 V DC, max 100 mA
Meter constant LED	3200 flashes per kWh	10000 flashes per kWh	1000 flashes per kWh	1000 flashes per kWh	10000 flashes per kWh
Cable size (power connection)	10 mm^2	10 mm^2	16 mm^2	33 mm^2	35 mm^2
Cable size (for communications)	4 mm^2	2.5 mm^2	6 mm^2	4 mm^2	2.5 mm^2
Internal burden, at 240 V L-N, 50 Hz	<10 VA		<2.5 VA	<3 VA	<10 VA
Active energy	■				
Reactive energy		■		■	■
Active power		■		■	■
Reactive power		■		■	■
Apparent power		■			■
Power Factor		■		■	■
Current and voltage		■		■	■
Frequency		■		■	■
LED for local signalling	Green LED: power ON Yellow LED: 3200 impulse per kWh	Red LED: 10000 impulse per kWh	Yellow LED: 1000 impulse per kWh	Yellow LED: 1000 impulse per kWh	Red LED: 10000 impulse per kWh
CE, UKCA* certification	■				
IP degree of protection (IEC 60529)	IP40 front panel and IP20 casing	IP51 front panel and IP20 casing	IP40 front panel and IP20 casing		IP51 front panel and IP20 casing
Operating temperature	-10°C to +55°C For iEM2000T: Temp range is: I <32 A: -25 °C to +65 °C, I > 32 A: -25 °C to +55 °C (K55)	-25°C to +55°C			
Storage Temperature	-40°C to +70°C	-30°C to +70°C	-25°C to +70°C	-25°C to +70°C	-30°C to +70°C
Humidity at +55°C	<95 %	<75 %	<95 %	<95 %	<75 %
Green Premium product (RoHS, China RoHS, REACH, PEP, EOL)	■				
Altitude	<2000 m	<2000 m	<3000 m	<2000 m	<2000 m
Measurement category	Category III				
Pollution degree	2				
Commercial reference number	A9MEM2000 A9MEM2000T A9MEM2010	A9MEM2050 A9MEM2055	A9MEM2100 A9MEM2105	A9MEM2110 A9MEM2135 A9MEM2150 A9MEM2155	A9MEM2435 A9MEM2455

* in selected references.

Acti9 iEM2xxx range dimensions

iEM2000/iEM2000T/iEM2010 dimensions

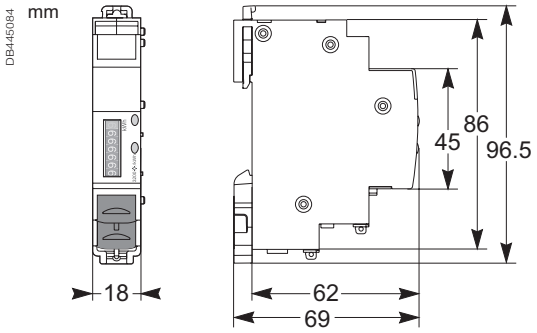

Maximum diameter power connection clamps 8 mm² (solid copper). See the appropriate product Installation Guide for complete instructions.

iEM2050/iEM2055 dimensions

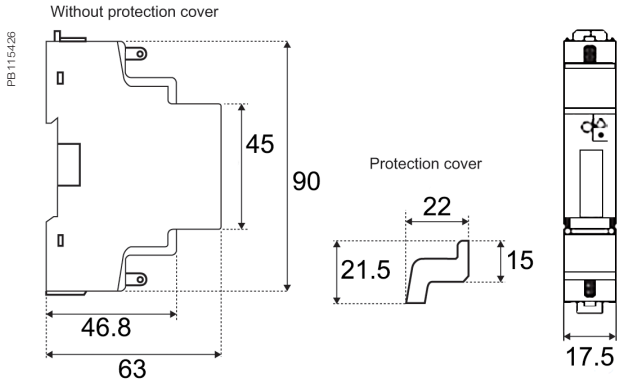

Maximum diameter power connection clamps 8 mm² (solid copper). See the appropriate product Installation Guide for complete instructions.

iEM2100/iEM2105 dimensions

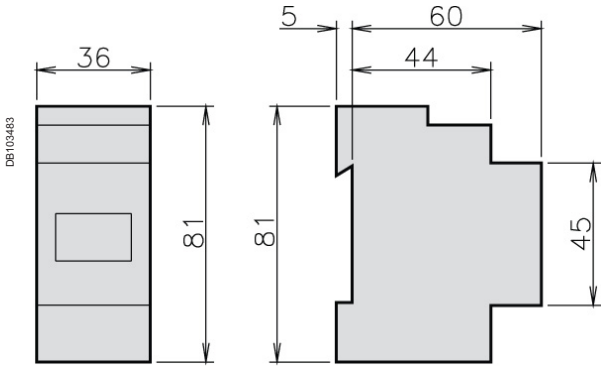

iEM2110/iEM2135/iEM2150/iEM2155 dimensions

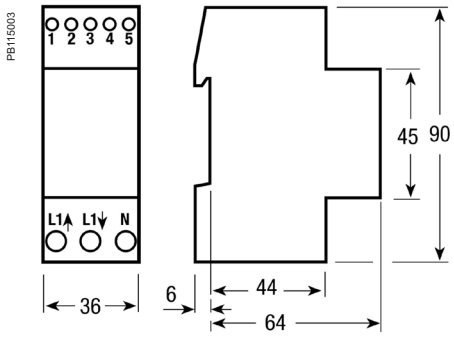

iEM2435/iEM2455 dimensions

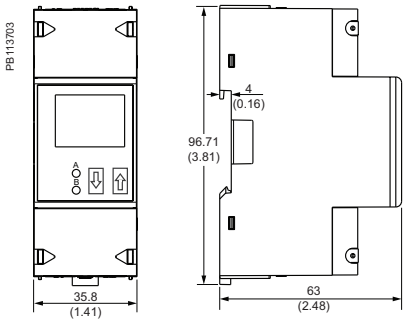

Acti9 iEM2xxx range commercial reference numbers

iEM2000, iEM2100, iEM2400 series commercial/ordering reference numbers

Commercial reference number	Product description
A9MEM2000T	iEM2000T energy meter, Class 1, 230 V, 40 A, pulse output, no display
A9MEM2000	iEM2000 energy meter, Class 1, 230 V, 40 A, MID, electromechanical counter display
A9MEM2010	iEM2010 energy meter, Class 1, 230 V, 40 A, MID, pulse output, electromechanical counter display
A9MEM2050	iEM2050 power and energy meter, Class 1, 230 V, 45 A, RS-485, 2 tariffs, pulse output, LCD display
A9MEM2055	iEM2055 power and energy meter, Class 1, 230 V, 45 A, RS-485, MID, 2 tariffs, pulse output, LCD display
A9MEM2100	iEM2100 energy meter, Class 1, 230 V, 63 A, LCD display
A9MEM2105	iEM2105 energy meter, Class 1, 230 V, 63 A, pulse output, LCD display
A9MEM2110	iEM2110 power and energy meter, Class 1, 230 V, 63 A, MID, 2 tariffs, 2 pulse outputs, 4 quadrants, LCD display
A9MEM2135	iEM2135 power and energy meter, Class 1, 230 V, 63 A, M-Bus, MID, 2 tariffs, 4 quadrants, LCD display
A9MEM2150	iEM2150 power and energy meter, Class 1, 230 V, 63 A, RS-485, 4 quadrants, LCD display
A9MEM2155	iEM2155 power and energy meter, Class 1, 230 V, 63 A, RS-485, MID, 2 tariffs, 4 quadrants, LCD display
A9MEM2435	iEM2435 power and energy meter, Class 1, 230 V, 100 A, M-Bus, MID, 2 tariffs, 2 pulse outputs, 4 quadrants, LCD display
A9MEM2455	iEM2455 power and energy meter, Class 1, 230 V, 100 A, RS-485, MID, 2 tariffs, 2 pulse outputs, 4 quadrants, LCD display

See your Schneider Electric representative for complete ordering information.

Acti9 iEM3000 Series

The Acti 9 iEM3000 series energy meters is a cost-attractive, feature-rich energy metering offer for DIN rail, modular enclosures. With Modbus, BACnet, M-Bus and LonWorks protocol support, you can easily integrate these meters into commercial and non-critical buildings to add simple energy management applications to any BMS, AMR or EMS system.

Applications

Cost management applications

- Bill checking to verify that you are only charged for the energy you use.
- Sub-billing individual tenants for their energy consumption, including WAGES.
- Aggregation of energy consumption, including WAGES, and allocating costs per area, per usage, per shift, or per time within the same facility.

Network management applications

- Basic metering of electrical parameters to better understand the behaviour of your electrical distribution system.

PB108450

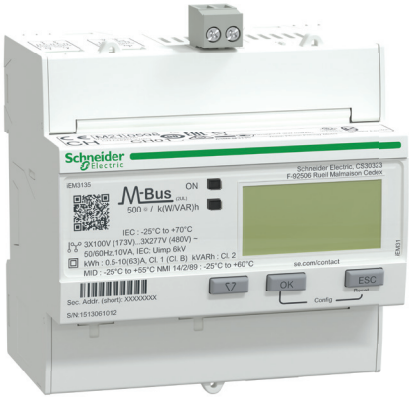

A9MEM3135

PB113704

A9MEM3355

PB113705

A9MEM3255

More than just kWh meters, the Acti 9 iEM3000 series meters provide a full view of both energy consumption and on-site generation with full four-quadrant measurement of active and reactive energy delivered and received. Additionally, extensive real-time measurements (V, I, P, PF) give customers greater detail on their energy usage, and multiple tariffs give customers the flexibility to match the billing structure of their utility.

The solution for

All markets that can benefit from a solution that includes PowerLogic™ iEM3000 series meters:

- Buildings & industry
- Data centres and networks
- Infrastructure (airports, road tunnels, telecom)

Benefits

Optimise your energy consumption & enable energy efficiency practices:

- Collect and analyse energy consumption data from each area for each type of load or circuit
- Gain an accurate understanding of business expenses by allocating the energy-related costs
- Identify energy savings opportunities and monitor continuously
- Use information to implement actions designed to reduce energy consumption

Monitor the energy consumption of your tenants or customers and establish accurate invoices:

- Drive energy-efficient behaviour
- Allow building owners to bill tenants for individual measured utility usage
- Give accurate and achievable objectives for energy savings

Features

- Multi-line circuit: Measure individual phase energy in three phase network system
- Partial and Total energy: Separate counters for measuring active, reactive and apparent energy
- 4 Quadrant measurement: For measuring quadrant based power and energy
- Multi tariff energy: Up to 4 counters activated through RTC, digital inputs or command register
- Digital input/output: For status monitoring/tariff control and energy pulsing/overload alarm
- Demand measurement: Per-phase and average current, total power for active, reactive and apparent
- Current: Direct connected/ whole current with the option of 63 A or 125 A, 1 A or 5 A CT operated, LVCT or Rogowski coil supported
- Internal clock: Quartz crystal based back up by super capacitor

Competitive advantages

- Compact size
- MID compliant for Wh and VARh (selected models) providing certified accuracy and data security
- Programmable digital inputs/outputs
- Multi-tariff capability
- Onboard Modbus, LonWorks, M-Bus or BACnet communication*
- Baud Rate configurable
- Communication protection: enable or disable through communication
- A complete range of energy meters
- Compatible with Acti 9 range
- Direct connect up to 125 A
- Password: configurable from 0-9999*
- Pulse output*: configurable pulse constant (imp/kWh, imp/kVARh), pulse width (ms)

Energy management system:

To get the most effective use from your Schneider Electric measurement and metering devices, we offer a range of dedicated data loggers and gateways for your building energy management.

Conformity of standards*

- BS / EN / IEC 61557-12
- EN / IEC 62053-21
- EN / IEC 62053-22
- EN / IEC 62053-23
- EN 50470-3
- EN 50470-1
- METAS
- EN / IEC 62052-11
- BS / EN / IEC 61326-1
- EN / IEC 62052-31:2015
- BS / IEC / EN / UL 61010-1
- ANSI C12.20 / ANSI C12.16
- NMI M 6-1, RCM
- UL, CE and UKCA certified
- CAN/CSA-C22.2
- EAC, KZ

* Available in selected references

Acti 9 iEM3000 Series

Feature selection

Current Input/ Wh Accuracy	iEM3000 series Energy meters							
63 A Direct/ Class 1	iEM3100	iEM3115	iEM3110	iEM3135	iEM3150	iEM3155	iEM3165	iEM3175
1 A or 5 A CT/ Class 0.5S (+1)	iEM3200	iEM3215	iEM3210	iEM3235	iEM3250	iEM3255	iEM3265	iEM3275
125 A Direct/ Class 1	iEM3300		iEM3310	iEM3335	iEM3350	iEM3355	iEM3365	iEM3375
1/3rd or 1 V LVCT/ Class 0.5S						iEM3455	iEM3465	
Rogowski coil/ Class 0.5S						iEM3555	iEM3565	
Communication Protocol								
Modbus					■	■		
M-Bus				■				
BACnet							■	
LonWorks								■
Measurement (Integrated)								
Active energy - Total and Partial energy	■	■	■	■	■	■	■	■
4 Quadrant Active, Reactive energy and Apparent energy				■		■	■	■
MID compliant (Wh) (+2) MID compliant (VARh) (+2)		■	■	■		■	■	■
Demand (per-ph & average current, total power for P Q S) (+3)						■	■	
Peak Demand (per-ph & average current, total power for P Q S) (+3)						■	■	
Measurement (Instantaneous)								
Voltage				■	■	■	■	■
Current				■	■	■	■	■
Power - P Q S				■	■	■	■	■
Power factor				■	■	■	■	■
Frequency				■	■	■	■	■
Multi-Tariff, control by								
Internal clock		4		4		4	4	4
Digital Inputs		4		2		2	2	2
Communication		-		4		4	4	4
Digital inputs								
For Status, Tariff control or Input monitoring				1		1	1	1
Tariff control only		2						
Digital outputs								
Energy pulsing or Overload alarm				1		1	1	
Pulse output only			1					
Internal clock								
Quartz crystal based		■		■		■	■	■
Date/time format (DD-MMM-YYYY/hh:mm)		■		■		■	■	■
Commercial reference								
Commercial References/ordering references	A9MEM3100 A9MEM3200 A9MEM3300	A9MEM3115 A9MEM3215	A9MEM3110 A9MEM3210 A9MEM3310	A9MEM3135 A9MEM3235 A9MEM3335	A9MEM3150 A9MEM3250 A9MEM3350	A9MEM3155 A9MEM3255 A9MEM3355 A9MEM3455 A9MEM3555	A9MEM3165 A9MEM3265 A9MEM3365 A9MEM3465 A9MEM3565	A9MEM3175 A9MEM3275 A9MEM3375

(+1) MID certification available for x/5 A and x/1 A.
(+2) MID certification not applicable for iEM34xx and iEM35xx series.
(+3) Demand parameters available in iEM34xx and iEM35xx series only.

See your Schneider Electric representative for complete ordering information.

Acti 9 iEM3000 Series

Technical Specifications

		iEM31xx	iEM32xx	iEM33xx	iEM34xx	iEM35xx
Width in mm x number of modules		18 mm x 5	18 mm x 5	18 mm x 7	18 mm x 5	18 mm x 5
Wiring type (scheme)		3PH3W, 3PH4W, 1PH2W L-N, 1PH2W L-L, 1PH3W L-L-N				
Operating Temperature		-25°C to 70°C (-13 °F to 158 °F)				
Storage temperature		-40 °C to 85 °C (-40 °F to 185 °F)				
Wiring capacity		16 mm²	6 mm² for I and 4 mm² for V	50 mm²	6 mm² for I and 4 mm² for V	
LCD display		99999999.9 kWh	99999999.9 kWh / MWh	99999999.9 kWh	99999999.9 kWh / MWh	
IP Protection		IP40 front, IP20 casing				
Over voltage and measurement		Category III, Pollution Degree 2				
Operating Voltage		3 x 100/173 V AC to 3 x 277/480 V AC (50/60 Hz)				
Operating Current		0.5 A to 63 A	*Inom* 5 A: 50 mA to 6 A *Inom* 1 A: 10 mA to 1.2 A	1 A to 125 A	0.022 V to 0.4 V (0.333 V *Inom*) or 0.05 V to 1.2 V (1 V *Inom)* LVCTs	50 to 5000 A Rogowski Coil
Altitude		< 3000 m (9842 ft)				
Humidity		5% – 95%				
Voltage inputs	Measured voltage	Wye: 100 - 277 V L-N, 173 - 480 V L-L ±20% Delta: 173 - 480 V L-L ±20%				
	Overload	332 V L-N or 575 V L-L				
	Impedance	3 MΩ	3 MΩ	6 MΩ	3 MΩ	
	Frequency	50 / 60 Hz ±10%				
	Measurement category	III				
	Minimum wire temperature rating required	90 °C (194 °F)	90 °C (194 °F)	105 °C (221 °F)	90 °C (194 °F)	
	Maximum device consumption	-	< 10 VA	-	< 10 VA	
	Wire	16 mm² / 6 AWG	2.5 mm² / 14 AWG	50 mm² / 1 AWG	2.5 mm² / 14 AWG	
	Wire strip length	11 mm / 0.43 in	8 mm / 0.31 in	13 mm / 0.5 in	8 mm / 0.31 in	
	Torque	1.8 Nm / 15.9 in•lb	0.5 Nm / 4.4 in•lb	3.5 Nm / 30.9 in•lb	0.5 Nm / 4.4 in•lb	
Current inputs	Nominal current	-	1 A or 5 A	-	-	-
	Measured current	0.5 A to 63 A	20 mA to 6 A	1 A to 125 A	-	
	Withstand	10 A continuous, 20 A at 10 sec/hr			-	-
	Minimum wire temperature rating required	-	90 °C (194 °F)	-	90 °C (194 °F)	
	Impedance	< 0.3 mΩ	< 1 mΩ	< 0.2 mΩ	-	-
	Frequency	50 / 60 Hz ±10%				
	Burden	< 10 VA at 63 A	< 0.036 VA at 6 A	< 10 VA at 125 A		
	Wire	16 mm² / 6 AWG	6 mm² / 10 AWG	50 mm² / 1 AWG	6 mm² / 10 AWG	
	Wire strip length	11 mm / 0.43 in	8 mm / 0.31 in	13 mm / 0.5 in	8 mm / 0.31 in	
	Torque	1.8 Nm / 15.9 in•lb	0.8 Nm / 7.0 in•lb	3.5 Nm / 30.9 in•lb	0.8 Nm / 7.0 in•lb	
	Split-core LVCTs	-	-	-	0.333 V or 1 V nominal	
	Rogowski Coil	-	-	-	U018 Series of Rogowski Coils (up to 5000 A)	
	Minimum wire temperature rating required	-	-	-	90 °C (194 °F)	

Acti 9 iEM3000 Series

PB108448

A9MEM3455

PB112478

LVCT00102S

PB108449

A9MEM3565

PB118060

METSECTR25500

Recommended* Schneider make Split-core LVCT for iEM3455 and iEM3465

Part Number	Sensing Current	Frequency	Output
LVCT00102S	100A	50/60Hz	0 to 1/3V
LVCT00202S	200A	50/60Hz	0 to 1/3V
LVCT00302S	300A	50/60Hz	0 to 1/3V
LVCT00403S	400A	50/60Hz	0 to 1/3V
LVCT00603S	600A	50/60Hz	0 to 1/3V
LVCT00803S	800A	50/60Hz	0 to 1/3V
LVCT00804S	800A	50/60Hz	0 to 1/3V
LVCT01004S	1000A	50/60Hz	0 to 1/3V
LVCT01204S	1200A	50/60Hz	0 to 1/3V
LVCT01604S	1600A	50/60Hz	0 to 1/3V
LVCT02004S	2000A	50/60Hz	0 to 1/3V
LVCT02404S	2400A	50/60Hz	0 to 1/3V
LVCT00050S	50A	50/60Hz	0 to 1/3V
LVCT00101S	100A	50/60Hz	0 to 1/3V
LVCT00201S	200A	50/60Hz	0 to 1/3V

* Split core LVCT with 1 V output can also be used.

Rogowski Coil for iEM3555 and iEM3565

Part Number	Sensing Current	Frequency	Lead length (m)	Approximate Inside Diameter (mm)
METSECTR25500	5000A	50/60Hz	2.35	80
METSECTR30500	5000A	50/60Hz	2.35	96
METSECTR46500	5000A	50/60Hz	2.35	146
METSECTR60500	5000A	50/60Hz	2.35	191
METSECTR90500	5000A	50/60Hz	2.35	287

Measurement accuracy

		As per EN / IEC 62053-21/22/23	As per BS / EN / IEC 61557-12	As per EN 50470-3	Current range of operation
iEM31xx	Active energy	Class 1 (IEC 62053-21)	Class 1 (PMD DD)	Class B	I*max*=63 A, I*ref*=10 A, I*min*=0.5 A, and I*st*=0.04 A
	Reactive energy	Class 2 (IEC 62053-23)	Class 2 (PMD DD)	-	I*max*=63 A, I*b*=10 A, and I*st*=0.05 A
iEM33xx	Active energy	Class 1 (IEC 62053-21)	Class 1 (PMD DD)	Class B	I*max*=125 A, I*ref*=20 A, I*min*=1 A, and I*st*=0.08 A
	Reactive energy	Class 2 (IEC 62053-23)	Class 2 (PMD DD)	-	I*max*=125 A, I*b*=20 A, and I*st*=0.1 A
iEM32xx (x/1 A Current input)	Active energy	Class 1 (IEC 62053-21)	Class 1 (PMD SD, PMD Sx)	Class B	I*max*=1.2 A, I*nom*=1 A, and I*st*=0.002 A
	Reactive energy	Class 2 (IEC 62053-23)	Class 2 (PMD Sx)	-	I*max*=1.2 A, I*nom*=1 A, and I*st*=0.003 A
iEM32xx (x/5 A Current input)	Active energy	Class 0.5S (IEC 62053-22)	Class 1 (PMD SD, PMD Sx)	Class C	I*max*=6 A, I*nom*=5 A, and I*st*=0.005 A
	Reactive energy	Class 2 (IEC 62053-23)	Class 2 (PMD Sx)	-	I*max*=6 A, I*nom*=5 A, and I*st*=0.015 A
iEM34xx (LVCT, 0.333/1.0 V at I*nom*) Field selectable	Active energy	±1%	-	-	Low voltage output for 0.333 V LVCT, I*max*=0.399 V, I*nom*=0.333 V, and I*min*=0.022 V
	Reactive energy	±2%	-	-	
iEM35xx (from 50 A to 5000 A)	Active energy	±1%	-	-	I*max*=5000 A, I*min*=50 A
	Reactive energy	±2%	-	-	

Acti 9 iEM3000 Series dimensions

iEM3000/iEM3200 series dimensions

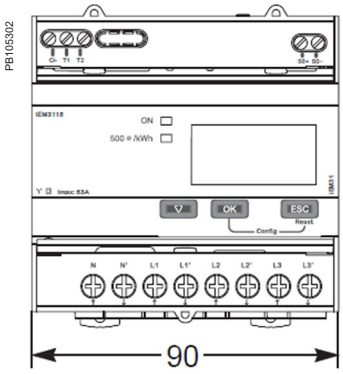

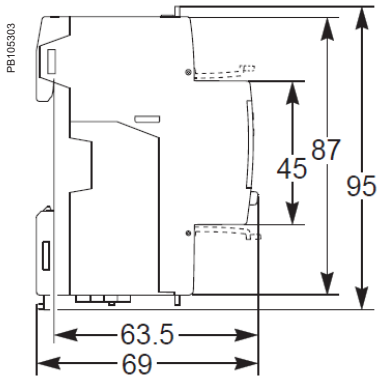

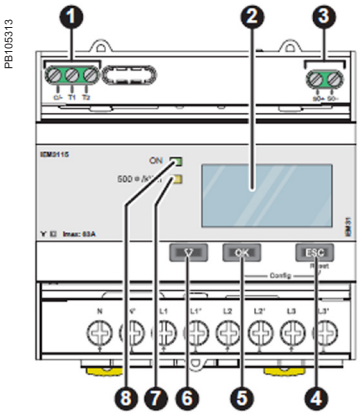

Acti 9 iEM3100/iEM3200 Series front flaps open and closed

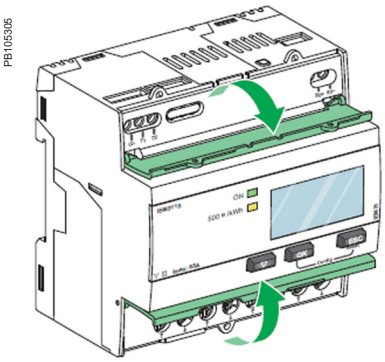

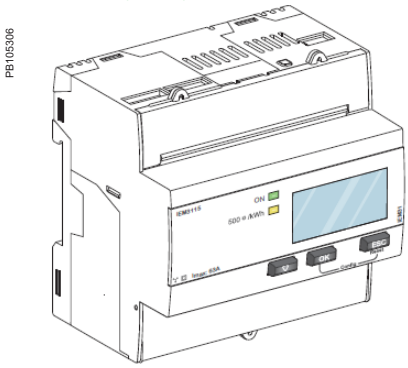

Acti 9 iEM3000 Series parts
1. Digital inputs for tariff control (iEM3115 / iEM3215)
2. Display for measurement and configuration
3. Pulse out for remote transfer (iEM3110 / iEM3210)
4. ESC Cancellation
5. OK Confirmation
6. ▽ Selection
7. Flashing yellow meter indicator to check accuracy
8. Green indicator: on/off, error

iEM3300 series dimensions

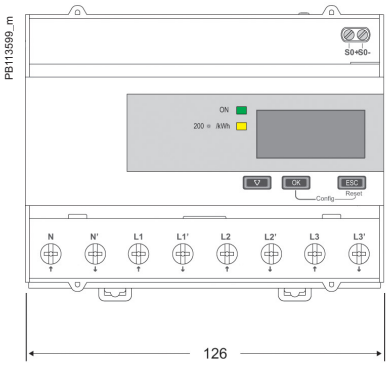

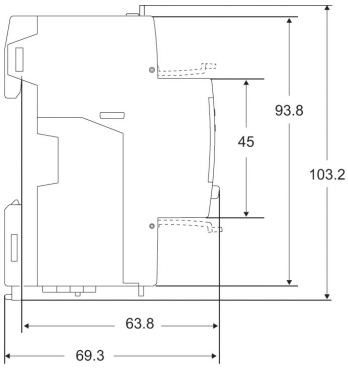

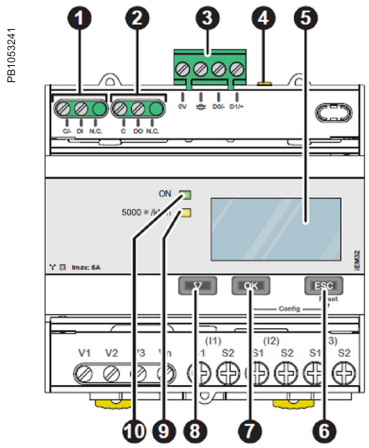

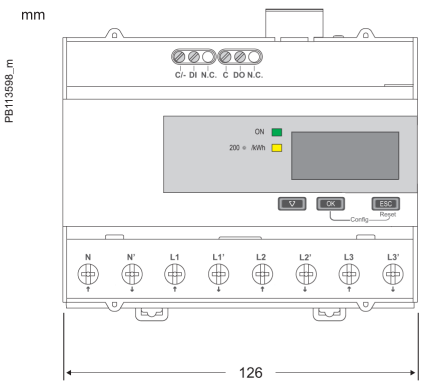

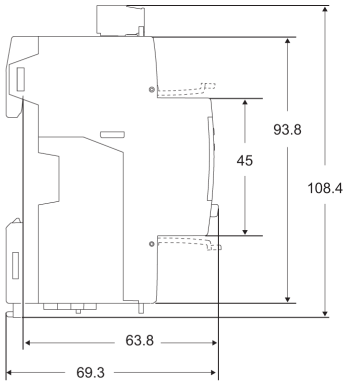

Acti 9 iEM3000 Series parts
1. Digital inputs for tariff control (iEM3115 / iEM3215)
2. Display for measurement and configuration
3. Pulse out for remote transfer (iEM3110 / iEM3210)
4. ESC Cancellation
5. OK Confirmation
6. ▽ Selection
7. Flashing yellow meter indicator to check accuracy
8. Green indicator: on/off, error

Please see the appropriate Installation Guide for accurate and complete information on the installation of this product.

PM3000 series

The PowerLogic™ PM3000 series power meters are a cost-attractive, feature-rich range of DIN rail-mounted power meters that offers all the measurement capabilities required to monitor an electrical installation.

Ideal for power metering and network monitoring applications that seek to improve the availability and reliability of your electrical distribution system, the meters are also fully capable of supporting sub-metering and cost allocation applications.

Applications

Cost management applications

- Bill checking to verify that you are only charged for the energy you use
- Aggregation of energy consumption, including WAGES, and cost allocation per area, per usage, per shift or per time within the same facility
- Energy cost and usage analysis per zone, per usage or per time period to optimise energy usage

Network management applications

- Metering of electrical parameters to better understand the behaviour of your electrical distribution system

PM3200

PM3250

The solution for

All markets that can benefit from a solution that includes PowerLogic™ PM3000 series meters:

- Buildings
- Industry
- Data centres and networks
- Infrastructure (e.g. airports, road tunnels, telecom)

Benefits

Optimise your energy consumption & enable energy efficiency practices

- Collect and analyse energy consumption data from each area for each type of load or circuit
- Gain an accurate understanding of business expenses by allocating the energy-related costs
- Identify savings opportunities
- Use information to implement actions designed to reduce energy consumption

Competitive advantages

Connectivity advantages

- Programmable digital input
  - External tariff control signal (4 tariff)
  - Remote reset partial counter
  - External status like breaker status
  - Collect WAGES pulses
- Programmable digital output
  - Alarm (PM3255)
  - KWh pulses
- Graphic LCD display
- Modbus RS-485 with screw terminals
  Multi-tariff capability
  The PM3000 series allows users to arrange KWh consumption in four different registers. This can be controlled by:
- Digital inputs. Signal can be provided by PLC or utilities
- Internal clock programmable by HMI
- Through communication

This function allows users to:

- Make tenant metering for dual source applications to differentiate backup source or utility source
- Understand well the consumption during peak time and off-peak time, weekdays and weekends, holiday and working days etc.
- Follow up feeders consumption in line with utility tariff rates

Power management solutions

Schneider Electric provides innovative power management solutions to increase your energy efficiency and cost savings, maximise electrical network reliability and availability, and optimise electrical asset performance.

Conformity of standards

- IEC 61557-12
- IEC 61326-1
- IEC 62052-11
- IEC 62053-21
- IEC 62053-22
- IEC 62053-23
- EN 50470-1
- EN 50470-3
- IEC 61010-1
- EN 55022

PM3000 series

PM3000 series feature selection

	PM3200	PM3210	PM3250	PM3255
Performance standard				
IEC61557-12 PMD/Sx/K55/0.5	■	■	■	■
General				
Use on LV and HV systems	■	■	■	■
Number of samples per cycle	32	32	32	32
CT input 1A/5A	■	■	■	■
VT input	■	■	■	■
Multi-tariff	4	4	4	4
Multi-lingual backlit display	■	■	■	■
Instantaneous rms values				
Current, voltage Per phase and average	■	■	■	■
Active, reactive, apparent power Total and per phase	■	■	■	■
Power factor Total and per phase	■	■	■	■
Energy values				
Active, reactive and apparent energy; import and export	■	■	■	■
Demand value				
Current, power (active, reactive, apparent) demand; present	■	■	■	■
Current, power (active, reactive, apparent) demand; peak		■	■	■
Power quality measurements				
THD Current and voltage		■	■	■
Data recording				
Min/max of the instantaneous values	■	■	■	■
Power demand logs				■
Energy consumption log (day, week, month)				■
Alarms with timestamping		5	5	15
Digital inputs/digital outputs		0/1		2/2
Communication				
RS-485 port			■	■
Modbus protocol			■	■
Commercial reference number	METSEPM3200	METSEPM3210	METSEPM3250	METSEPM3255

See your Schneider Electric representative for complete ordering information.

PM3000 series

PowerLogic™ PM3200 front view

PowerLogic™ PM3250 front view

PM3000 technical specifications

Type of measurement	True rms up to the 15th harmonic on three-phase (3P,3P+N) and single-phase AC systems. 32 samples per cycle
Measurement accuracy	
Current with x/5A CTs	0.3 % from 0.5 A to 6 A
Current with x/1A CTs	0.5 % from 0.1 A to 1.2 A
Voltage	0.3 % from 50 V to 330 V (Ph-N), from 80 V to 570 V (Ph-Ph)
Power factor	±0.005 from 0.5 A to 6 A with x/5 A CTs; from 0.1A to 1.2 A with x/1 A CTs and from 0.5 L to 0.8 C
Active/Apparent Power with x/5A CTs	Class 0.5
Active/Apparent Power with x/1A CTs	Class 1
Reactive power	Class 2
Frequency	0.05 % from 45 to 65 Hz
Active energy with x/5A CTs	IEC 62053-22 Class 0.5s
Active energy with x/1A CTs	IEC 62053-21 Class 1
Reactive energy	IEC 62053-23 Class 2
Data update rate	
Update rate	1s
Input-voltage characteristics	
Measured voltage	50 V to 330 V AC (direct / VT secondary Ph-N) 80 V to 570 V AC (direct / VT secondary Ph-Ph) up to 1 MV AC (with external VT)
Frequency range	45 Hz to 65 Hz
Input-current characteristics	
CT primary	Adjustable from 1 A to 32767 A
CT secondary	1 A or 5 A
Measurement input range with x/5A CTs	0.05 A to 6 A
Measurement input range with x/1A CTs	0.02 A to 1.2 A
Permissible overload	10 A continuous, 20 A for 10s/hour
Control Power	
AC	100/173 to 277/480 V AC (+/-20%), 3 W/5 VA; 45 Hz to 65 Hz
DC	100 to 300 V DC, 3 W
Input	
Digital inputs (PM3255)	11 to 40 V DC, 24 V DC nominal, <=4mA maximum burden, 3.5kVrms insulation
Output	
Digital output (PM3210)	Optocoupler, polarity sensitive, 5 to 30 V, 15 mA max, 3.5kVrms insulation
Digital outputs (PM3255)	Solid state relay, polarity insensitive, 5 to 40 V, 50 mA max, 50 Ω max, 3.5kVrms insulation

PM3000 series

PM3000 technical specifications

Mechanical characteristics	
Weight	0.26 kg
IP degree of protection (IEC 60529)	IP40 front panel, IP20 meter body
Dimension	90 x 95 x 70 mm
Environmental conditions	
Operating temperature	-25 °C to 55 °C
Storage temperature	-40 °C to 85 °C
Humidity rating	5 to 95% RH at 50 °C (non-condensing)
Pollution degree	2
Metering category	III, for distribution systems up to 277/480 V AC
Dielectric withstand	As per IEC61010-1, Doubled insulated front panel display
Altitude	3000 m max
Electromagnetic compatibility	
Electrostatic discharge	Level IV (IEC 61000-4-2)
Immunity to radiated fields	Level III (IEC 61000-4-3)
Immunity to fast transients	Level IV (IEC 61000-4-4)
Immunity to surge	Level IV (IEC 61000-4-5)
Conducted immunity	Level III (IEC 61000-4-6)
Immunity to power frequency magnetic fields	0.5mT (IEC 61000-4-8)
Conducted and radiated emissions	Class B (EN 55022)
Safety	
	CE as per IEC 61010-1★
Communication	
RS-485 port	Half duplex, from 9600 up to 38400 baud, Modbus RTU (double insulation)
Display characteristics	
Dimensions (VA)	43 mm x 34.6 mm
Display resolution	128 x 96 dots
Standard compliance	
	IEC 61557-12, EN 61557-12 IEC 61010-1, UL 61010-1 IEC 62052-11, IEC 62053-21, IEC 62053-22, IEC 62053-23 EN 50470-1, EN 50470-3

★ *Protected throughout by double insulation*

PM3000 dimensions

PM3200/PM3210 dimensions

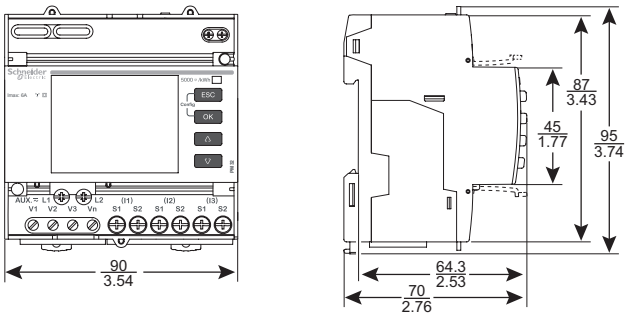

PM3250/PM3255 dimensions

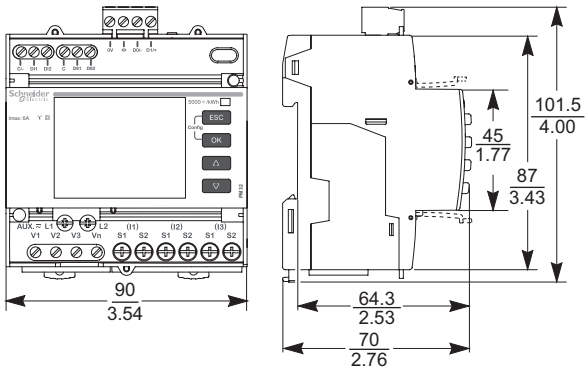

PM3200/PM3210 mounting

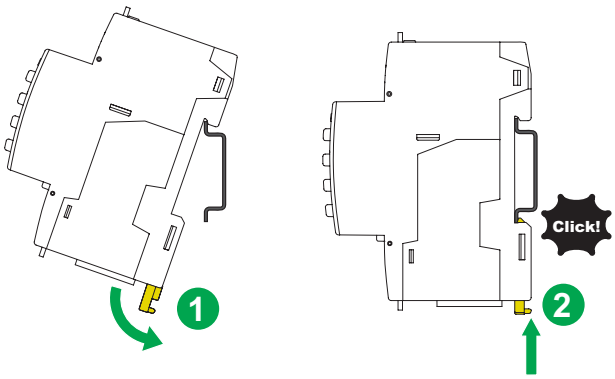

PM3250/PM3255 mounting

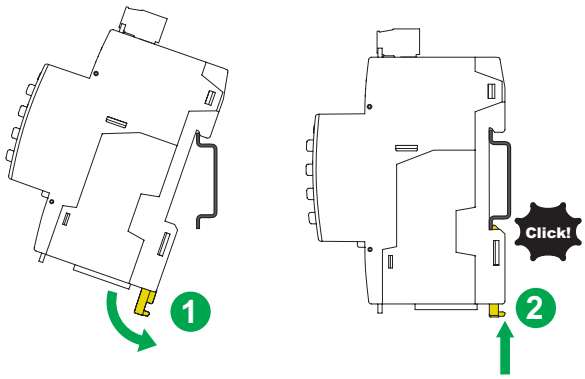

PM3200/PM3210 overview

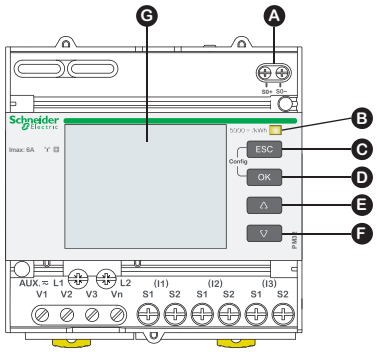

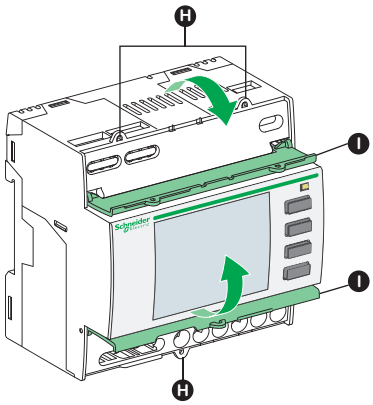

- A Pulse output for remote transfer (PM3210)
- B Energy pulse LED (5000 / kWh)
- C Cancellation
- D Confirmation
- E Up
- F Down
- G Display with white backlight
- H Sealing points
- I Sealable covers

PM3250/PM3255 overview

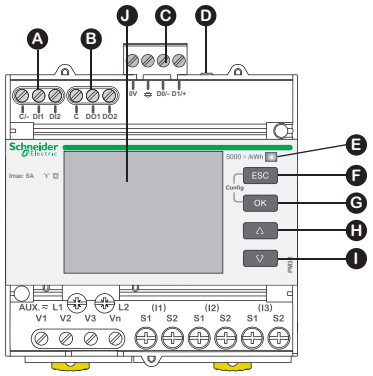

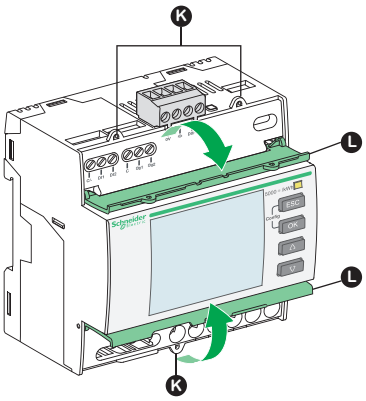

- A Digital inputs x 2 (PM3255)
- B Digital outputs x 2 (PM3255)
- C Communications port
- D Communications LED
- E Energy pulse LED (5000 / kWh)
- F Cancellation
- G Confirmation
- H Up
- I Down
- J Display with white backlight
- K Sealing points
- L Sealable covers

Please see the appropriate *Installation Guide* for accurate and complete information on the installation of this product.

PowerLogic™ PowerTag Energy series

PowerTag Energy is a wireless-communication energy sensor.

PowerTag Energy is designed specifically for Energy Management, Load Monitoring and Power Availability applications. Associated to a concentrator or a gateway, PowerTag Energy provides a full wireless class 1 solution to monitor energy at any level of a distribution panel.

Applications:

- Monitors your electrical installation from main incomer down to load level
- Suitable for various businesses, buildings, industrial and residential applications with easy integration in upper systems
- Supports and enables Energy Efficiency programs and standards such as:
  - European Energy Efficiency Directive (EED)
  - Energy Performance of Buildings Directive (EPBD)
  - IEC 60364-8-1 “Low Voltage Electrical installations - Energy Efficiency”
  - EN 17267 “Energy Measurement and Monitoring plan”
  - ISO 50001 “Energy Management System”

A9MEM1570

PowerTag Energy Flex 63 A (F63)

A9MEM1571

PowerTag Energy PhaseNeutral 63 A (P63)

LV434020

PowerTag Energy Monoconnect 250 A (M250)

A9MEM1590

PowerTag Energy Rope 2000 A (R2000)

A9MEM1580

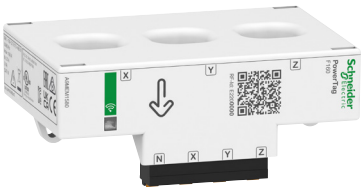

PowerTag Energy Flex 160 A (F160)

A9MEM1521

PowerTag Energy Monoconnect 63 A (M63)

PowerTag Energy

The solution for

Markets that benefit from a solution that includes PowerLogic™ PowerTag Energy series:

- Residential
- Small business
- Medium & large buildings
- Industrial sites

Benefits

PowerTag Energy sensor incorporates all features required to perform accurate real-time measurements (U, V, I, P, PF) and energy values up to 2000 A.

Different designs of PowerTag Energy are available to ensure it fits the protective device on which it is mounted.

- PowerTag Energy Monoconnect (M): can be mounted directly on the device, no additional wiring is required
- PowerTag Energy PhaseNeutral (P): for DIN offers with 9 mm pitch between phase and neutral
- PowerTag Energy Flex (F): can be mounted on a wide range of protective devices thanks to its design
- PowerTag Energy Rope (R) thanks to its openable current sensors can be easily installed on busbars or wires in new installations and in retrofit applications

PowerTag Energy sensor is acting as an autonomous meter. Energy counters are stored inside PowerTag Energy sensor.

Energy management system

To get the most effective use from your Schneider Electric measurement and metering devices, we offer a range of dedicated gateways / concentrators depending on your application.

Advantages

- Wireless-communication
- Range up to 2000 A
- Voltage loss alarming
- Class 1 accuracy
- Compact design
- Easy installation and commissioning
- Scalable solution
- Perfect for retrofit or new panels

Conformity of standards

- IEC 61557-12
- IEC 61010-1
- IEC 61010-2-030
- IEC 61326-1 (Industrial Environment)
- IEC 62311
- ETSI EN 300 328
- ETSI EN 301 487-1
- ETSI EN 301 489-17 (Radiated EMC)

Feature selection

	A9MEM15••	A9MEM15••	A9MEM15••	A9MEM1580	LV434020/LV434021
Product name	M63	P63	F63	F160	M250
Max current (I Max) A	63	63	63	160	250
Starting current (Ist)	40 mA	40 mA	40 mA	100 mA	160 mA
Design	Monoconnect	PhaseNeutral	Flex	Flex	Monoconnect
Mounting type	On device	On device	On wires	On wires	On device
Current sensors type	Solid core	Solid core	Solid core	Solid core	Solid core
Poles	1P + W / 1P+N / 3P / 3P+N	1P+N / 3P+N	1P+N / 3P / 3P+N	3P / 3P+N	3P / 3P+N
Self-powered	■	■	■	■	■
Voltage (L-N)	Depends on ref	200 - 240 V AC	Depends on ref	100 - 277 V AC	230 V AC
Measurements*					
Nb quadrant	2	2	2	4	4
Active Energy	Class 1	Class 1	Class 1	Class 1	Class 1
Reactive Energy				■	■
Apparent Energy				■	
Active Power	■	■	■	■	■
Reactive Power				■	■
Apparent Power	■	■	■	■	■
Power Factor	■	■	■	■	■
Frequency				■	■
Current and Voltage	■	■	■	■	■

* Data availability depending on the concentrator / gateway

	LV434022/LV434023	A9MEM1590	A9MEM1591	A9MEM1592	A9MEM1593
Product name	M630	R200	R600	R1000	R2000
Max current (I Max) A	630	200	600	1000	2000
Starting current (Ist)	400 mA	120 mA	400 mA	600 mA	1.2 A
Design	Monoconnect	Rope	Rope	Rope	Rope
Mounting type	On device	On wires	On wires	On wires	On wires
Current sensors type	Solid core	Split core	Split core	Split core	Split core
Poles	3P / 3P+N	3P / 3P+N	3P / 3P+N	3P / 3P+N	3P / 3P+N
Self-powered	■	■	■	■	■
Voltage (L-N)	230 V AC	100 - 277 V AC	100 - 277 V AC	100 - 277 V AC	100 - 277 V AC
Measurements*					
Nb quadrant	4	4	4	4	4
Active Energy	Class 1	Class 1	Class 1	Class 1	Class 1
Reactive Energy	■	■	■	■	■
Apparent Energy		■	■	■	■
Active Power	■	■	■	■	■
Reactive Power	■	■	■	■	■
Apparent Power	■	■	■	■	■
Power Factor	■	■	■	■	■
Frequency	■	■	■	■	■
Current and Voltage	■	■	■	■	■

* Data availability depending on the concentrator / gateway

Connection possibilities

1 PowerTag Energy Connected Upstream (U and I)

■ When breaker is OFF, PowerTag Energy remains energized.

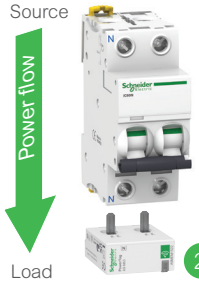

■ When breaker is OFF, PowerTag Energy is de-energized. PowerTag Energy sends Voltage loss alarm before complete stop.

2 PowerTag Energy Connected Downstream (U and I)

3 PowerTag Energy Connected Downstream (U and I)

■ When breaker is OFF, PowerTag Energy is de-energized. PowerTag Energy sends Voltage loss alarm before complete stop.

■ When breaker is OFF, PowerTag Energy remains energized.

4 PowerTag Energy Connected Upstream (U and I)

Note:

- In association with a contactor, a Variable Speed Drive or a motor starter: PowerTag Energy can ONLY be installed UPSTREAM these devices.
- Some PowerTag Energy can be installed either on the TOP or on the BOTTOM of the protective devices.
- Check the possible mounting position as indicated in the “Catalog numbers” chapter.

Connection (Voltage and Current)		Features
Upstream	1 4	• Energy management: consumption in kWh • Load monitoring: real-time measurements
Downstream Preferred installation to take full benefit of voltage loss alarming in diagnosing the load	2 3	• Energy management: consumption in kWh • Load monitoring: real-time measurements • Power availability: voltage loss alarming

Main associated concentrators / gateways (*)

For Commercial & Building applications		
PowerTag Link	EcoStruxure™ Panel Server	Wireless Panel Server for PrismaSeT Active
		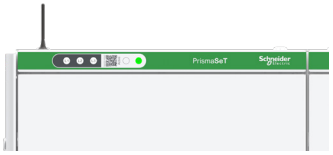
A9XMWD20	PAS600●	

For Small Business applications	For Residential applications	For Industrial applications
PowerTag Link C PowerTag Link C+	Wiser IP Module Wiser IP Module+	Harmony Hub
A9XELC10	EER31800	ZBRN1, ZBRN2, ZBRN32

(*) Refer to Selection Guide for complete compatibility pages 87 to 97.

PowerLogic™ PowerTag Energy 63 A

IEC 61557-12 PMD-I/DD/K55/1

As per the above standard:

With its compact design and innovative concept, PowerTag Energy 63 A fits directly on the protective device and as a result has no impact on DIN rail occupancy and switchboard size.
It is therefore well adapted to be mounted from head of group down to final circuits.
Since voltage and current are measured directly at the same point on the circuit to be monitored, it provides accurate measurement and relevant information such as voltage loss.
PowerTag Energy is compatible with SE product ranges as per the selection guide CA908058.

Main characteristics

PowerTag Energy measures the following values in accordance with the IEC 61557-12 standard PMD-I/DD/K55/1:

- Energy:
  - Active energy (kWh): total and partial, delivered and received.
- Real-time measurement values:
  - Voltages (V): phase-to-phase and phase-to-neutral.
  - Currents (A): per phase.
  - Power:
    - Active power (W): total and per phase.
    - Apparent power (VA): total.
  - Power factor.
- Voltage loss alarms:
  - PowerTag Energy sends a “voltage loss” alarm and the current-per-phase value before being de-energized.
  - At “voltage loss”, PowerTag Energy adds an overload alarm if the current is higher than the rated current of the associated protective device.

Note: Functions listed above depends on Concentrator/Gateway.

PowerTag Energy
Monoconnect 63 A (M63)

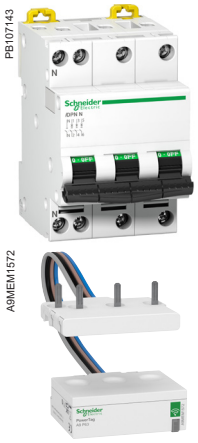

PowerTag Energy
PhaseNeutral 63 A (P63)

PowerTag Energy
Flex 63 A (F63)

Product selection

Neutral position

Some references of PowerTag Energy 63 A (Monoconnect and PhaseNeutral) exist in Top or Bottom version.
This is linked to the position of the neutral of the PowerTag Energy.

PowerTag Energy "Top"

- Designed to be mounted on the Top of the circuit breaker.

- Designed to be mounted on the Bottom of the circuit breaker.

PowerTag Energy "Bottom"

Note:
- Some PowerTag Energy can be installed either on the TOP or on the BOTTOM of the protective devices.
- Check the possible mounting position as indicated in the "Catalog numbers" chapter.
- In association with a contactor, a Variable Speed Drive or a motor starter: PowerTag Energy can ONLY be installed UPSTREAM these devices.

Number of poles

Choose the PowerTag Energy according to the number of poles of the protective device: one PowerTag Energy per protective device.

Ex.: 3 Pole PowerTag Energy 63 A for a 3 pole CB.

PowerLogic™ PowerTag Energy 63 A

Technical specifications

Main characteristics				
Rated voltage	1P+N / 1P+W	Un	Phase-to-neutral	200… 240 V AC ± 20 %
	3P	Un	Phase-to-phase	380… 415 V AC ± 20 %
	3P+N	Un	Phase-to-neutral	220… 240 V AC ± 20 %
			Phase-to-phase	380… 415 V AC ± 20 %
	A9MEM1543	Un	Phase-to-phase	200… 240 V AC ± 20 %
	A9MEM1564	Un	Phase-to-neutral	100… 127 V AC ± 20 %
	A9MEM1574	Un	Phase-to-neutral	120… 137 V AC ± 20 %
			Phase-to-phase	208… 240 V AC ± 20 %
Frequency				50/60 Hz
Maximum current		Imax		63 A
Basic current		Ib		10 A
Saturation current				130 A
Maximum consumption			1P+N	⩽ 1 VA
			3P/3P+N	⩽ 2 VA
Starting current		Ist		40 mA
Additional characteristics				
Operating temperature				-25°C to +60°C
Storage temperature				-40°C to +85°C
Overvoltage category			As per IEC 61010-1	Cat. III
Measuring category			As per IEC 61010-2-030	Cat. III
Pollution degree				3
Altitude				⩽ 2000 m
Degree of protection			Device only	IP20
			IK	05
Radio-frequency communication				
ISM band 2.4 GHz				2.4 GHz to 2.4835 GHz
Channels			As per IEEE 802.15.4	11 to 26
Isotropic Radiated Power			Equivalent (EIRP)	0 dBm
Maximum transmission time				< 5 ms
Channel occupancy			Messages sent every	5 seconds minimum
Characteristics of measuring functions				
Function		Symbol	Performance category as per IEC 61557-12 (PMD-I/DD/K55/1)	Device measuring range
			Class	
Active power		P	1	9 W to 63 kW
Active energy		Ea	1	Total and partial 0 to 99999999.9 kWh
Current		I	1	40 mA to 63 A
Voltage		U	0.5	Un ± 20 %
Power factor		PFA	1	0 to 1

PowerLogic™ PowerTag Energy 63 A

A9MEM1520

A9MEM1521

A9MEM1540

A9MEM1522

A9MEM1543

A9MEM1541

A9MEM1542

PowerTag Energy Monoconnect 63 A Commercial reference numbers

PowerTag Energy for Acti9 and Multi9 **Monoconnect** offers: «Single-terminal» circuit breakers, RCDs and switches with **18 mm pitch between phase and neutral**, rating less than or equal to 63 A.

Commercial reference number	Type	Mounting	Description
A9MEM1520	1P+wire	Top or bottom	PowerTag Energy M63 1PW
A9MEM1521	1P+N	Top	PowerTag Energy M63 1PN T
A9MEM1522		Bottom	PowerTag Energy M63 1PN B
A9MEM1540	3P	Top or bottom	PowerTag Energy M63 3P
A9MEM1543			PowerTag Energy M63 3P 230V LL
A9MEM1541	3P+N	Top	PowerTag Energy M63 3PN T
A9MEM1542		Bottom	PowerTag Energy M63 3PN B

Designed to fit the following devices: iC60, Reflex iC60, DT60, iID.
Check the Concentrators /Gateways compatibility and the list of Schneider Electric compatible devices with the Selection Guide pages 87 to 97.

A9MEM1561

A9MEM1562

A9MEM1563

A9MEM1571

A9MEM1572

PowerTag Energy PhaseNeutral 63 A Commercial reference numbers

PowerTag Energy for Acti9 and Multi9 **PhaseNeutral** offers: «Single-terminal» circuit breakers, RCDs and switches at **pitch of 9 mm between phase and neutral**, rating less than or equal to 63 A.

Commercial reference number	Type	Mounting	Description
A9MEM1561	1P+N	Top	PowerTag Energy P63 1PN T
A9MEM1562	1P+N	Bottom	PowerTag Energy P63 1PN B
A9MEM1563	1P+N RCBO	Bottom	PowerTag Energy P63 1PN B RCBO 18mm
A9MEM1571	3P+N	Top	PowerTag Energy P63 3PN T
A9MEM1572	3P+N	Bottom	PowerTag Energy P63 3PN B

Designed to fit the following devices: DT40, iDPN, C40, i DPN Vigi.
Check the Concentrators /Gateways compatibility and the list of Schneider Electric compatible devices with the Selection Guide pages 87 to 97.

A9MEM1560

A9MEM1564

A9MEM1573

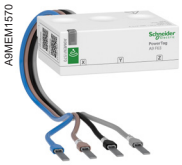
A9MEM1570

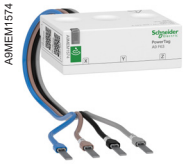
A9MEM1574

PowerTag Energy Flex 63 A Commercial reference numbers

PowerTag Energy **Flex** for other devices and specific installations, rating less than or equal to 63 A.

Commercial reference number	Type	Mounting	Description
A9MEM1560	1P+N	Top or bottom	PowerTag Energy F63 1PN
A9MEM1564	1P+N	Top or bottom	PowerTag Energy F63 1PN 110V
A9MEM1573	3P	Top or bottom	PowerTag Energy F63 3P
A9MEM1570	3P+N	Top or bottom	PowerTag Energy F63 3PN
A9MEM1574	3P+N	Top or bottom	PowerTag Energy F63 3PN 127/220V

Designed to fit the following devices: Vigi iDT40, Vigi iC40, Vigi iC60, iC60 double terminal, iID double terminal.
Check the Concentrators /Gateways compatibility and the list of Schneider Electric compatible devices with the Selection Guide pages 87 to 97.

Contact your Schneider Electric representative for complete ordering information.

PowerTag Energy Monoconnect 63 A connection

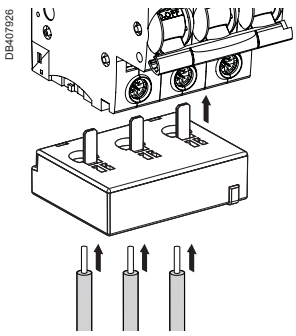

Stripping length	Copper cables					
	Rigid		Flexible		Flexible with ferrule	
	DB122945	DB112804	DB123553	DB112805	DB123554	DB123008
18 mm	1.5 to 16 mm² AWG: 16...6	2 x 1.5 to 2.5 mm² AWG: 16...14	1.5 to 16 mm² AWG: 16...6	2 x 1.5 to 2.5 mm² AWG: 16...14	1.5 to 16 mm² AWG: 16...6	2 x 1.5 to 2.5 mm² AWG: 16...14

Mounting with 18 mm ferrule recommended.

PowerTag Energy Monoconnect 63 A dimensions (mm)

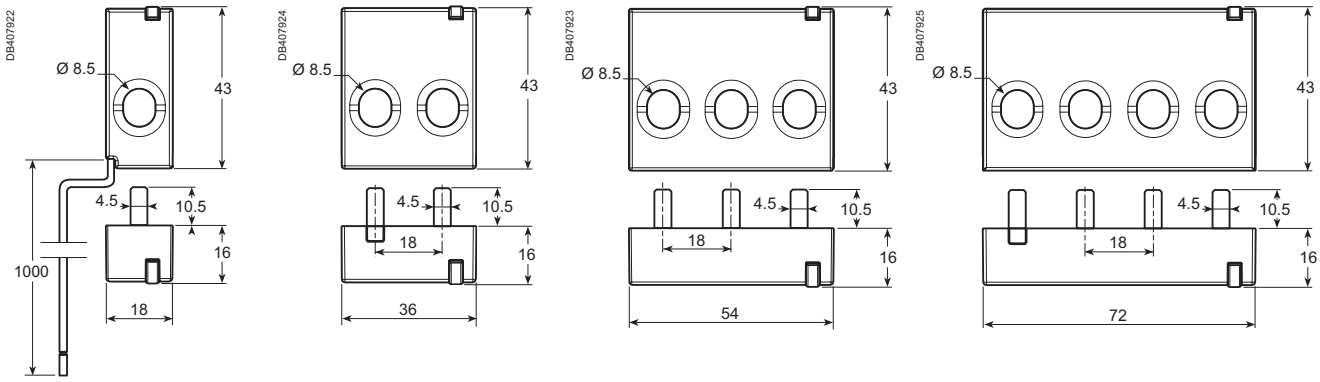

1P+wire 1P+N 3P 3P+N

PowerTag Energy Monoconnect 63 A weight

Type	Weight (g)
1P+wire	16.4
1P+N	17.5
3P	28
3P+N	35

Please refer to PowerTag Energy 63 A Installation Sheet for accurate and complete information on the installation of this product.

PowerTag Energy PhaseNeutral 63 A connection

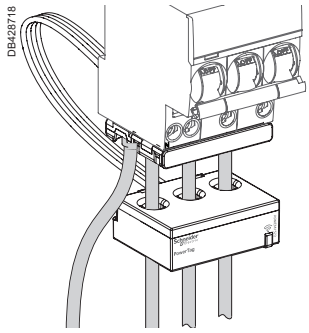

Copper cables					
Rigid		Flexible		Flexible with ferrule	
1.5 to 16 mm² AWG: 16...6	2 x 1.5 to 2.5 mm² AWG: 16...14	1.5 to 16 mm² AWG: 16...6	2 x 1.5 to 2.5 mm² AWG: 16...14	1.5 to 16 mm² AWG: 16...6	2 x 1.5 to 2.5 mm² AWG: 16...14

Stripping length: respect the stripping length stated on the device the PowerTag Energy is associated with.

PowerTag Energy PhaseNeutral 63 A dimensions (mm)

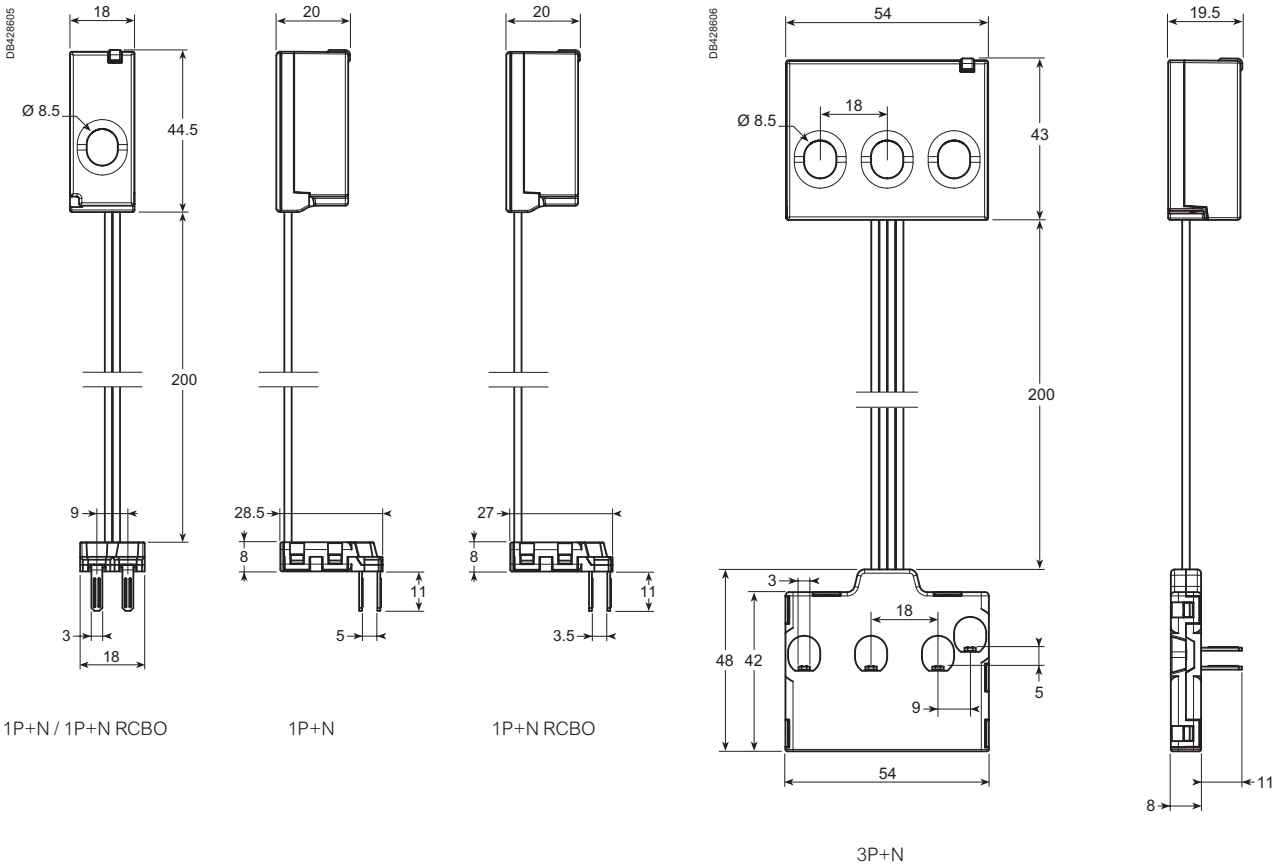

1P+N / 1P+N RCBO 1P+N 1P+N RCBO 3P+N

PowerTag Energy PhaseNeutral 63 A weight

Type	Weight (g)
1P+N	18
3P+N	48

Please refer to PowerTag Energy 63 A Installation Sheet for accurate and complete information on the installation of this product.

PowerTag Energy Flex 63 A connection

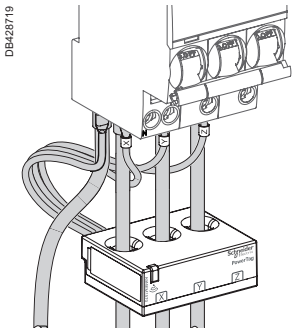

Copper cables					
Rigid		Flexible		Flexible with ferrule	
DB122945	DB112804	DB123553	DB112805	DB123554	DB123008
1.5 to 16 mm² AWG: 16...6	2 x 1.5 to 2.5 mm² AWG: 16...14	1.5 to 16 mm² AWG: 16...6	2 x 1.5 to 2.5 mm² AWG: 16...14	1.5 to 16 mm² AWG: 16...6	2 x 1.5 to 2.5 mm² AWG: 16...14

Stripping length: respect the stripping length stated on the device the PowerTag Energy is associated with.

PowerTag Energy Flex 63 A dimensions (mm)

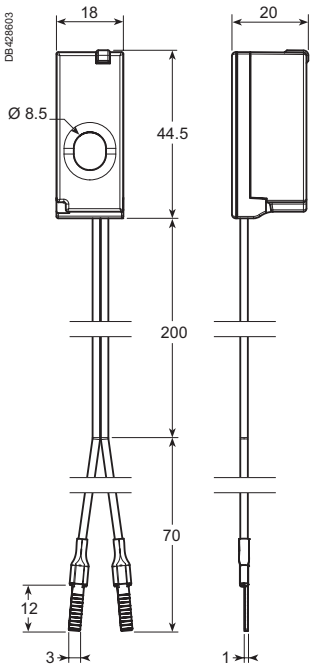

1P+N

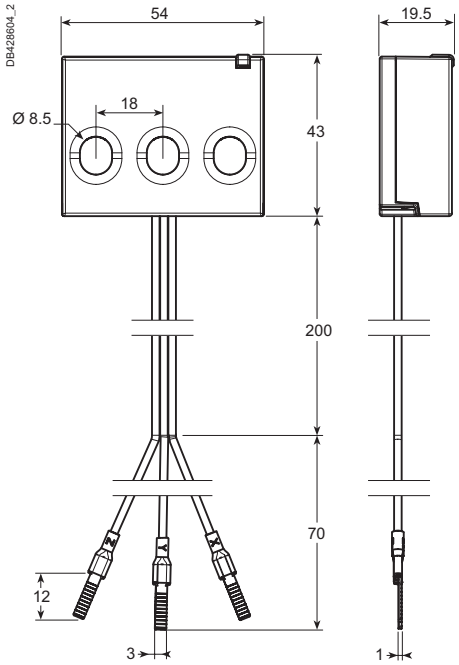

3P

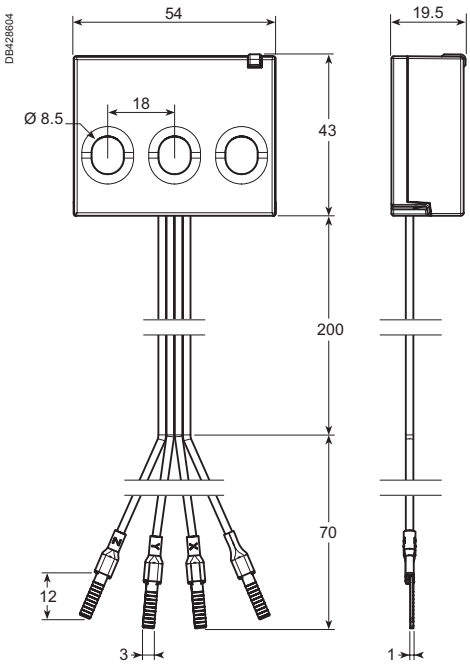

3P+N

PowerTag Energy Flex 63 A weight

Type	Weight (g)
1P+N	16
3P	38
3P+N	40

Please refer to PowerTag Energy 63 A Installation Sheet for accurate and complete information on the installation of this product.

PowerLogic™ PowerTag Energy 63 A Resi9

IEC 61557-12 PMD-I/DD/K55/1

As per the above standard:

With its compact design and innovative concept, PowerTag Energy 63 A Resi9 fits directly on the Resi9 protective device and as a result has no impact on DIN rail occupancy and switchboard size.
It is therefore well adapted to be mounted from head of group down to final circuits.
Since voltage and current are measured directly at the same point on the circuit to be monitored, it provides accurate measurement and relevant information such as voltage loss.

PowerTag Energy 63 A Resi9 is dedicated to the Resi9 range of devices and compatible with Wiser concentrators/gateways.

Main characteristics

PowerTag Energy measures the following values in accordance with the IEC 61557-12 standard PMD-I/DD/K55/1:

- Energy:
  - Active energy (kWh): total and partial, delivered and received.
- Voltage loss alarms:
  - PowerTag Energy sends a “voltage loss” alarm before being de-energized.
  - At “voltage loss”, PowerTag Energy adds an overload alarm if the current is higher than the rated current of the associated protective device.

PowerTag Energy
Monoconnect 63 A (M63)

PowerTag Energy
Monoconnect 63 A (M63)

PowerLogic™ PowerTag Energy 63 A Resi9

Installation

Some references of PowerTag Energy 63 A Resi9 (Monoconnect) exist in Top or Bottom version. This is linked to the position of the neutral of the PowerTag Energy.

PowerTag Energy "Top"

- Designed to be mounted on the Top of the circuit breaker.

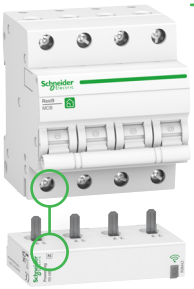

- Designed to be mounted on the Bottom of the circuit breaker.

PowerTag Energy "Bottom"

Note:
- Some PowerTag Energy 63 A Resi9 can be installed either on the TOP or on the BOTTOM of the protective devices.
- Check the possible mounting position as indicated in the "Catalog numbers" chapter.
- In association with a contactor, a Variable Speed Drive or a motor starter: PowerTag Energy can ONLY be installed UPSTREAM these devices.

Number of poles

Choose the PowerTag Energy according to the number of poles of the protective device: one PowerTag Energy per protective device.

Ex.: 3 pole PowerTag Energy 63 A Resi9 for a 3 pole CB.

PowerLogic™ PowerTag Energy 63 A Resi9

Technical specifications

Main characteristics				
Rated voltage	1P+N / 1P+W	Un	Phase-to-neutral	200… 240 V AC ± 20 %
	3P	Un	Phase-to-phase	380… 415 V AC ± 20 %
	3P+N	Un	Phase-to-neutral	220… 240 V AC ± 20 %
			Phase-to-phase	380… 415 V AC ± 20 %
	R9M43	Un	Phase-to-phase	200… 240 V AC ± 20 %
Frequency				50/60 Hz
Maximum current		Imax		63 A
Basic current		Ib		10 A
Saturation current				130 A
Maximum consumption			1P+N	≤ 1 VA
			3P/3P+N	≤ 2 VA
Starting current		Ist		40 mA
Additional characteristics				
Operating temperature				-25°C to +60°C
Storage temperature				-40°C to +85°C
Overvoltage category			As per IEC 61010-1	Cat. III
Measuring category			As per IEC 61010-2-030	Cat. III
Pollution degree				3
Altitude				≤ 2000 m
Degree of protection			Device only	IP20
			IK	05
Radio-frequency communication				
ISM band 2.4 GHz				2.4 GHz to 2.4835 GHz
Channels			As per IEEE 802.15.4	11 to 26
Isotropic Radiated Power			Equivalent (EIRP)	0 dBm
Maximum transmission time				< 5 ms
Channel occupancy			Messages sent every	5 seconds minimum
Characteristics of measuring functions				
Function		Symbol	Performance category as per IEC 61557-12 (PMD-I/DD/K55/1)	Device measuring range
			Class	
Active energy (delivered and received)		Ea	1	Total and partial 0 to 99999999.9 kWh
Current		I	1	40 mA to 63 A
Voltage		U	0.5	Un ± 20 %

PowerLogic™ PowerTag Energy 63 A Resi9

R9M20

R9M21

R9M40

R9M22

R9M43

R9M41

R9M42

PowerTag Energy Monoconnect 63 A Resi9 Commercial reference numbers

PowerTag Energy for Resi9 **Monoconnect** offers: «Single-terminal» circuit breakers, RCDs and switches with **18 mm pitch between phase and neutral**, rating less than or equal to 63 A.

Commercial reference number	Type	Mounting	Description
R9M20	1P+wire	Top or bottom	PowerTag Energy R9 M63 1PW
R9M21	1P+N	Top	PowerTag Energy R9 M63 1PN T
R9M22		Bottom	PowerTag Energy R9 M63 1PN B
R9M40	3P	Top or bottom	PowerTag Energy R9 M63 3P
R9M43			PowerTag Energy R9 M63 3P 230V LL
R9M41	3P+N	Top	PowerTag Energy R9 M63 3PN T
R9M42		Bottom	PowerTag Energy R9 M63 3PN B

Refer to the Resi9 catalog in your country to select the right PowerTag Energy model to fit on the Resi9 protective device you want to equipped.

R9M60

R9M70

PowerTag Energy Flex 63 A Resi9 Commercial reference numbers

PowerTag Energy **Flex** for other Resi9 devices and specific installations, rating less than or equal to 63 A.

Commercial reference number	Type	Mounting	Description
R9M60	1P+N	Top or bottom	PowerTag Energy R9 F63 1PN
R9M70	3P+N	Top or bottom	PowerTag Energy R9 F63 3PN

Refer to the Resi9 catalog in your country to select the right PowerTag Energy model to fit on the Resi9 protective device you want to equipped.

To allow PowerTag Energy Resi9 F63 to adapt to different types of terminals, the voltage tap lugs can be replaced with other end-pieces or lugs for AWG22/0.33 mm2 wires.

PowerLogic™ PowerTag Energy 63 A Resi9

PowerTag Energy R9 M63 connection

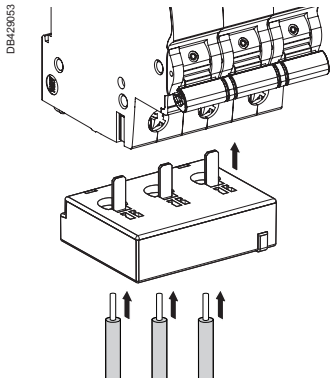

Stripping length : 18 mm

PowerTag Energy R9 M63 dimensions (mm)

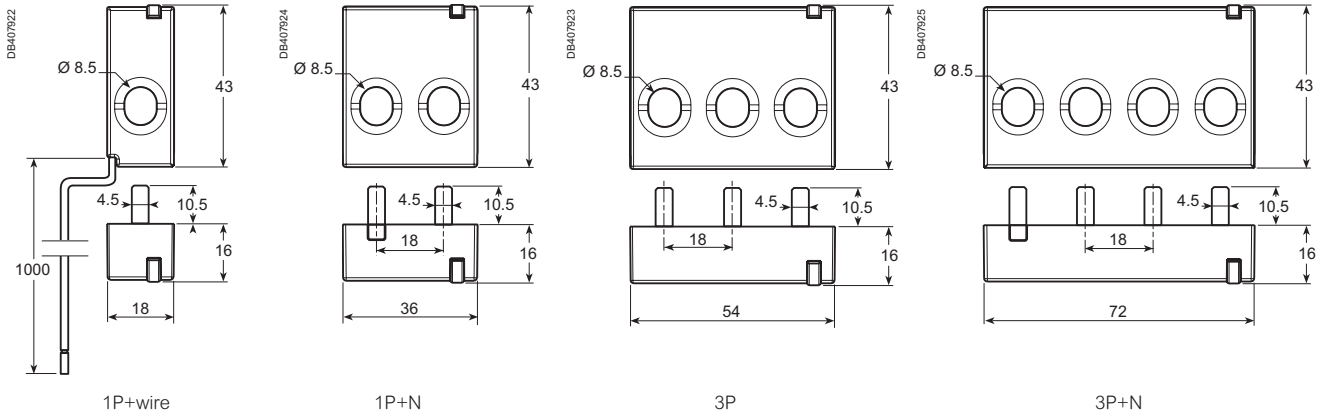

PowerTag Energy R9 M63 weight

Type	Weight (g)
1P+wire	16.4
1P+N	17.5
3P	28
3P+N	35

PowerLogic™ PowerTag Energy 63 A Resi9

PowerTag Energy R9 F63 connection

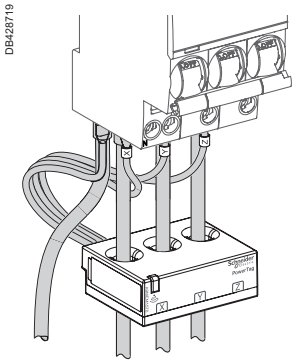

Stripping length: respect the stripping length stated on the device the PowerTag Energy is associated with.

PowerTag Energy R9 F63 dimensions (mm)

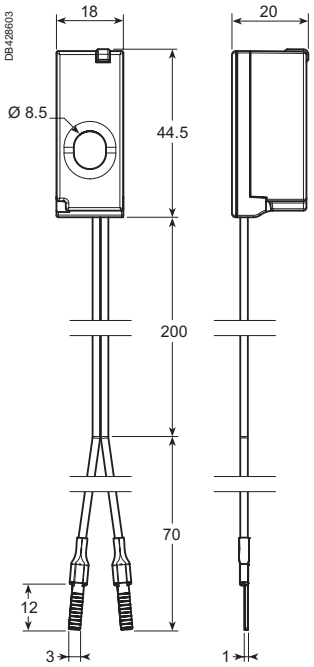

1P+N

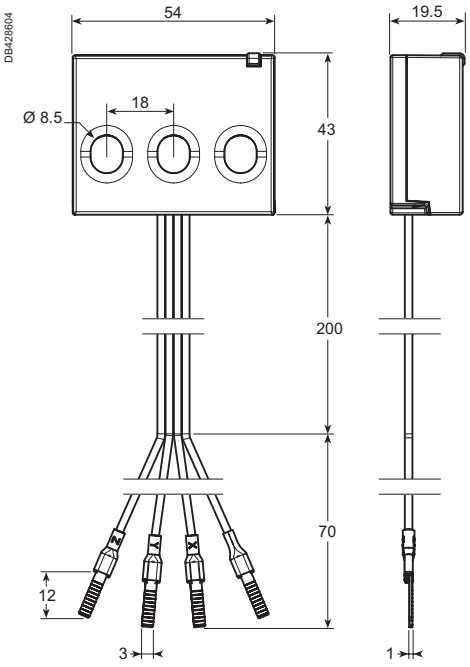

3P+N

PowerTag Energy R9 F63 weight

Type	Weight (g)
1P+N	16
3P	40

Please refer to PowerTag Energy 63 A Resi9 Installation Sheet for accurate and complete information on the installation of this product.

PowerLogic™ PowerTag Energy Flex 160 A

IEC 61557-12 PMD-II/DD/K70/1

As per the above standard:

With its flex design this PowerTag Energy can be used on many products or group of loads up to 160 A on 3P or 3P+N networks. Its removable spring connector for voltage picking facilitates its installation, and shapes for brackets allows to mount and maintain it where needed in a panel.

Main characteristics

PowerTag Energy Flex 160 A measures the following values in accordance with the IEC 61557-12 standard PMD-II/DD/K70/1:

- Energy (4 quadrants):
  - Active energy (kWh): total and partial, delivered and received.
  - Active energy per phase (kWh): total and partial, delivered and received.
  - Reactive energy (kVARh): total and partial, delivered and received.
  - Reactive energy per phase (kVARh): total and partial, delivered and received.
  - Apparent energy (kVAh): total and partial.
  - Apparent energy per phase (kVAh): total and partial.
- Real-time measurement values:
  - Voltages (V): phase-to-phase (U12, U23, U31) and phase-to-neutral (V1N, V2N, V3N).
  - Currents (A): per phase (I1, I2, I3), calculated neutral current when connected (IN) .
  - Power:
    - Active power (W): total and per phase.
    - Reactive power (VAR): total and per phase.
    - Apparent power (VA): total and per phase.
  - Frequency (Hz).
  - Power factor: total and per phase.
- Voltage loss alarms:
  - PowerTag Energy Flex sensor sends a “voltage loss” alarm and the current-per-phase value before being de-energized.
  - At “voltage loss”, PowerTag Energy Flex adds an overload alarm if the current is higher than the rated current of the associated protective device

Note: Functions listed above depends on Concentrator/Gateway.

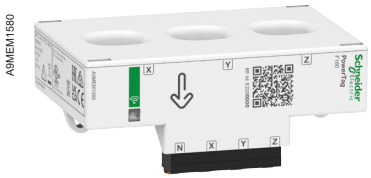

PowerTag Energy Flex 160 A

PowerLogic™ PowerTag Energy Flex 160 A

Installation

PowerTag Energy Flex 160 A can be installed in a panel directly on cables or busbars, associated to a product or not. Voltage pickings removable spring terminal has to be wired by 1 copper wire per phase with following characteristics:

Wire range

Solid	Stranded	Stranded with terminal ends
0.2...1.5 mm²	0.2...2.5 mm²	0.25...1.5 mm²
24...16 AWG	24...14 AWG	24...16 AWG

Neutral picking shall be connected to have phase-to-neutral voltages, energy per phase and power per phase provided.

PowerTag Energy Flex 160 A is mainly advised for ComPact NSXm, ComPact INS160, Acti9 NG125, Acti9 C120, PowerPact B, TeSys GV4, and all other devices with a rating between 63 A and 160 A.

PB120384

PowerLogic™ PowerTag Energy Flex 160 A

Technical specifications

Main characteristics (as per IEC 61557-12)			
Rated voltage	Un	Phase-to-neutral	100...277 V AC ± 20 %
		Phase-to-phase	173...480 V AC ± 20 %
Frequency			50/60 Hz
Maximum current	Imax		160 A
Maximum operating current			1.2 x Imax
Saturation current			2 x Imax
Maximum consumption			3 VA
Starting current	Ist		100 mA
Basic current	Ib		25 A
Additional characteristic			
Operating temperature			-25 °C to +70 °C
Storage temperature			-40 °C to +85 °C
Overvoltage category		As per IEC 61010-1	Cat. IV
Measuring category		As per IEC 61010-2-030	Cat. IV
Pollution degree			3
Altitude			Up to 2000 m without derating [1]
Degree of protection device			IP20
			IK05
Radio-frequency communication			
ISM band 2.4 GHz			2.4 GHz to 2.4835 GHz
Channels		As per IEEE 802.15.4	11 to 26
Isotropic Radiated Power		Equivalent (EIRP)	0 dBm
Maximum transmission time			< 5 ms
Channel occupancy		For 1 device	messages sent every 5 seconds
Characteristics of measuring functions			
Function	Symbol	Performance category as per IEC 61557-12 (PMD-II/DD/K70/1)	Device measuring range
		Class	
Total active power (Active power per phase)	P	1	24 W (8 W) to 192 kW
Total reactive power (Reactive power per phase)	Q_A	2	30 VAR (10 VAR) to 192 kVAR
Total apparent power (Apparent power per phase)	S_A	2	38 VA (13 VA) to 192 kVA
Active Energy: per phase, total, partial, delivered and received	E_a	1	0 to 281.10^9 kWh
Reactive energy: per phase, total, partial, delivered and received	E_{rA}	2	0 to 281.10^9 kVARh
Apparent energy: per phase, total, partial	E_{apA}	2	0 to 281.10^9 kVAh
Frequency	f	0.5	45 to 65 Hz
Phase current	I	1	100 mA to 320 A
Neutral current	I_{NC}	2	
Voltages (Line to Line)	U	0.5	138 to 576 V AC
Power factor (per phase, total)	PF_A	1	-1 to 1

[1] Above 2000 m, please consult Schneider Electric.

PowerLogic™ PowerTag Energy Flex 160 A

A9MEM1580

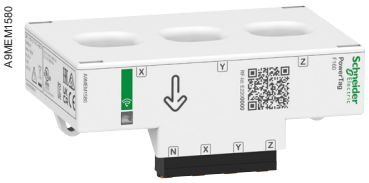

A9MEM1580

PowerTag Energy Flex 160 A Commercial reference numbers

Commercial reference number	Type	Description
A9MEM1580	F160 3P/3P+N	PowerTag Energy Flex 160 A 3P / 3P+N

Check the Concentrators /Gateways compatibility and the list of Schneider Electric compatible devices with the Selection Guide pages 87 to 97.

Contact your Schneider Electric representative for complete ordering information.

PowerTag Energy Flex 160 A dimensions

DB436016

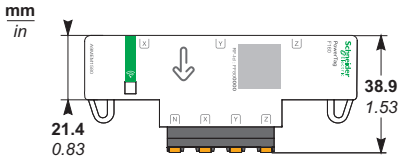

DB436017

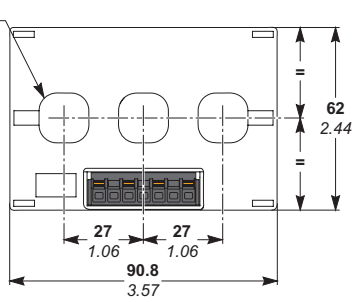

PowerTag Energy Flex 160 A weight

Type	Weight (g)
F160 3P/3P+N	100

Please refer to PowerTag Energy Flex 160 A Installation Sheet for accurate and complete information on the installation of this product.

PowerLogic™ PowerTag Energy Monoconnect 250 A & 630 A

IEC 61557-12 PMD-II/DD/K70/1

As per the above standard:

PowerTag Energy M250/M630 is designed for Molded Case Circuit Breakers and Switches (ComPact, EasyPact CVS and TeSys) for 3P and 3P+N electrical networks. This PowerTag Energy is mounted directly on the bottom side of the circuit breaker or the Vigi add-on if any. Thanks to its integrated design, it does not require any specific wiring, and is compatible with the same connection accessories than the device it is mounted on.

Main characteristics

PowerTag Energy M250/M630 measures the following values in accordance with the IEC 61557-12 standard PMD-II/DD/K70/1:

- Energy (4 quadrants):
  - Active energy (kWh): total and partial, delivered and received.
  - Active energy per phase (kWh): total.
  - Reactive energy (kVARh): partial, delivered and received.
- Real-time measurement values:
  - Voltages (V): phase-to-phase (U12, U23, U31) and phase-to-neutral (V1N, V2N, V3N).
  - Currents (A): per phase (I1, I2, I3).
  - Power:
    - Active power (W): total and per phase.
    - Reactive power (VAR): total.
    - Apparent power (VA): total.
  - Frequency (Hz).
  - Power factor.
- Voltage loss alarms:
  - PowerTag Energy sends a “voltage loss” alarm and the current-per-phase value before being de-energized.
  - At “voltage loss”, PowerTag Energy adds an overload alarm if the current is higher than the rated current of the associated protective device.

Note: Functions listed above depends on Concentrator/Gateway.

LV434020

PowerTag Energy Monoconnect 250 A

PowerLogic™ PowerTag Energy Monoconnect 250 A & 630 A

Installation

The module is self-powered and is installed for fixed devices directly on the bottom side of the circuit breaker or Vigi add-on terminals. For plug-in devices, it has to be installed on the base itself, top or bottom.

PowerTag Energy M250/M630 3P has to be used with 3P devices, and an external neutral voltage tap is provided in case of the installation has a neutral to provide phase-to-neutral voltages, active energy per phase and power per phase.
PowerTag Energy M250/M630 3P+N has to be used with 4P devices and with ComPact INS/INV 3P/4P switches

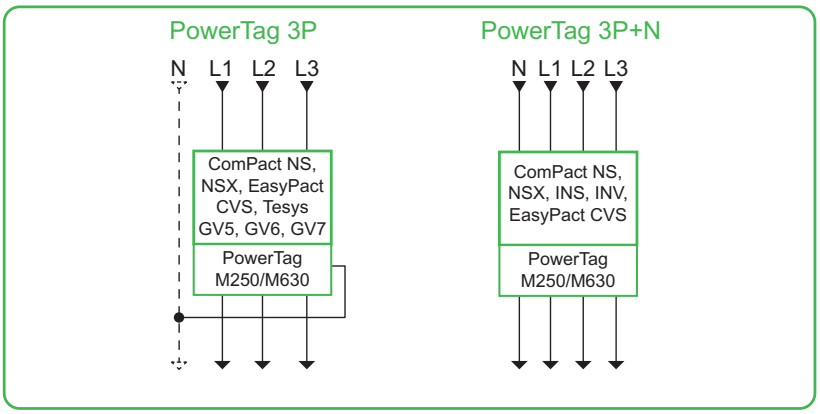

PowerTag M250/M630 modules are compatible with ComPact NSX100/160/250, ComPact NSX400/630, ComPact INS250-100A to 250A, ComPact INS320/400/500/630, ComPact INV100/160/200/250, ComPact INV320/400/500/630, ComPact NS100/160/250, ComPact NS400/630, EasyPact CVS 100-250, EasyPact CVS 400-630, TeSys GV5, TeSys GV6 and TeSys GV7.

Important notice : A derating coefficient may apply for the circuit-breaker on which the PowerTag is mounted on. Refer to the circuit breaker catalogue for derating coefficient.

In case of retrofit, following points have to been checked:

- Clearance to be able to add PowerTag Energy module and to respect bending radius of cables.
- Condition of power connectors: to be replaced if damaged.
- Tightening torques depending of the connector used.

LV434022_image-NSX630-3P

PowerLogic™ PowerTag Energy Monoconnect 250 A & 630 A

Technical specifications

Main characteristics			
Rated voltage	Un	Phase-to-neutral	230 VAC ± 20 %
		Phase-to-phase	400 VAC ± 20 %
Frequency			50/60 Hz
Maximum current	Imax		250 A / 630 A
Maximum operating current			1.2 x Imax
Saturation current			2 x Imax
Maximum consumption			3.7 VA
Starting current	Ist		160 mA / 400 mA
Basic current	Ib		40 A / 100 A
Additional characteristic			
Operating temperature			-25 °C to +70 °C
Storage temperature			-50 °C to +85 °C
Overvoltage category		As per IEC 61010-1	Cat. IV
Measuring category		As per IEC 61010-2-030	Cat. III
Pollution degree			3
Altitude			Up to 2000 m without derating [1]
Degree of protection device			IP20
			IK07
Radio-frequency communication			
ISM band 2.4 GHz			2.4 GHz to 2.4835 GHz
Channels		As per IEEE 802.15.4	11 to 26
Isotropic Radiated Power		Equivalent (EIRP)	0 dBm
Maximum transmission time			< 5 ms
Channel occupancy		For 1 device	messages sent every 5 seconds
Characteristics of measuring functions			
Function	Symbol	Performance category as per IEC 61557-12 (PMD-II/DD/K70/1)	Device measuring range (250 A / 630 A)
		Class	
Total active power (Active power per phase)	P	1	88 W (29 W) to 416 kW / 222 W (74 W) to 1048 kW
Total reactive power	Q_A	2	88 VAR to 416 kVAR / 221 VAR to 1048 kVAR
Total apparent power	S_A	2	88 VA to 416 kVA / 221 VA to 1048 kVA
Active Energy: per phase, total, partial	E_a	1	0 to 281.10^9 kWh
Partial Reactive Energy	E_{rA}	2	0 to 281.10^9 kVARh
Phase current	I	1	160 mA to 500 A / 400 mA to 1260 A
Voltages (Line to Line)	U	0.5	320 to 480 VAC
Power factor	PF_A	1	-1 to 1

[1] Above 2000 m, please consult us.

PowerLogic™ PowerTag Energy Monoconnect 250 A & 630 A

LV434020

LV434021

LV434022

LV434023

PowerTag Energy Monoconnect 250 A & 630 A Commercial reference numbers

Commercial reference number	Type	Description	Connection adapter for mounting on plug-in base only
LV434020	M250 3P	PowerTag Energy 250 A 3P	LV429306
LV434021	M250 3P+N	PowerTag Energy 250 A 3P+N	LV429307
LV434022 (1)	M630 3P	PowerTag Energy 630 A 3P	LV432584
LV434023 (1)	M630 3P+N	PowerTag Energy 630 A 3P+N	LV432585

Check the Concentrators /Gateways compatibility and the list of Schneider Electric compatible devices with the Selection Guide pages 87 to 97.

Contact your Schneider Electric representative for complete ordering information.

(1) For plug-in devices only: when plate mounted, need to add an intercalary wedging plate under the PowerTag Energy module with following dimensions:

3P

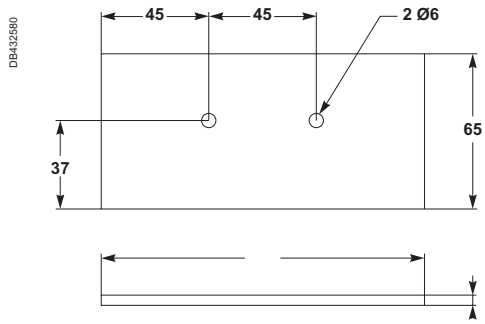

3P + N

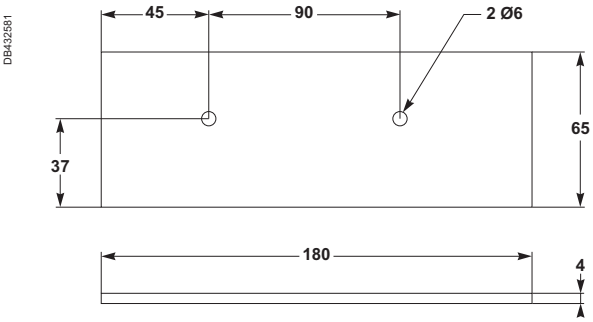

PowerLogic™ PowerTag Energy Monoconnect 250 A & 630 A

NSX100-250 / NSX400-630 / CVS100-250 / CVS400-630

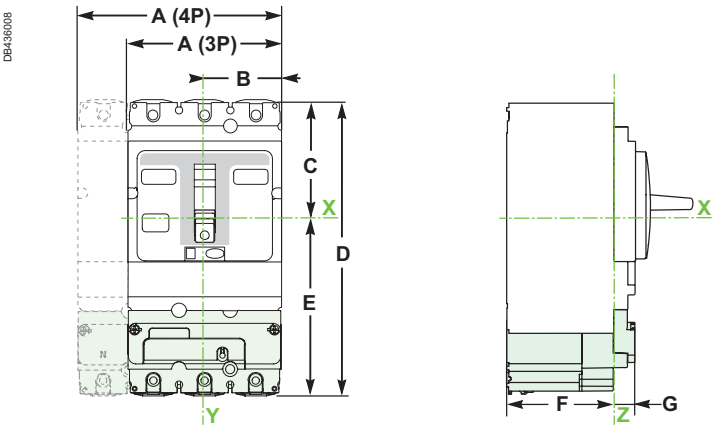

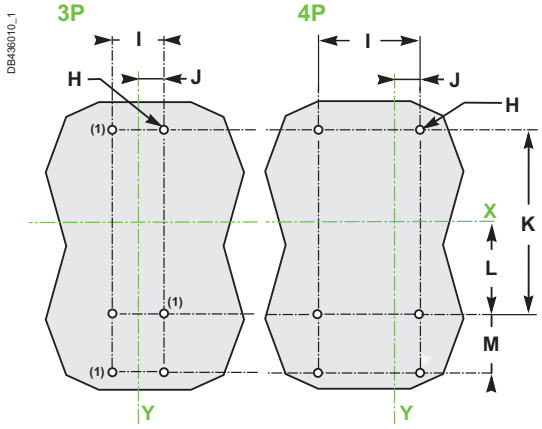

(1) Only for PowerTag M630

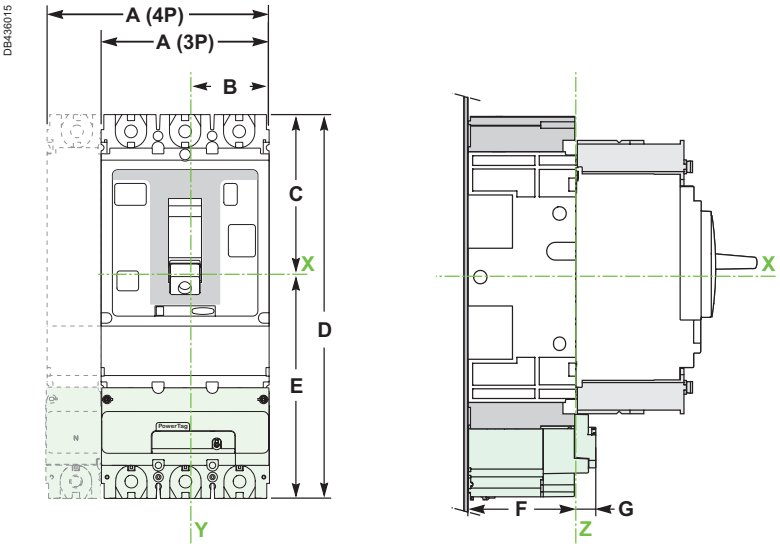

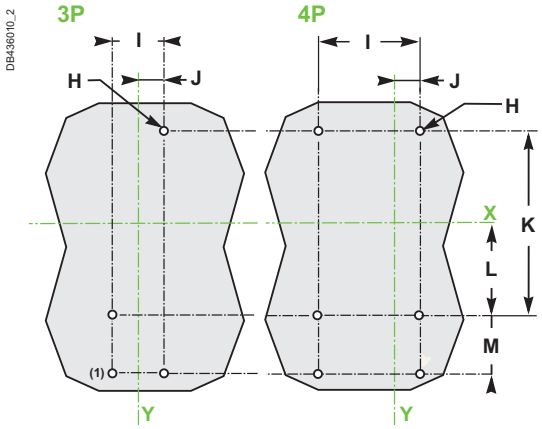

(1) Only for PowerTag M630

mm in	A		B	C	D	E	F	G	H		I		J		K	L	M
	3P	4P							3P	4P	3P	4P	3P	4P			
NSX100-250 CVS 100-250	105 4.13	140 5.51	52.5 2.06	80.5 3.17	201 7.91	120.5 4.74	72 2.83	14 0.55	3 Ø6 3 Ø0.23	6 Ø6 6 Ø0.23	35 1.34	70 2.75	17. 5 0.68	17. 5 0.68	125 4.92	62.5 2.46	40 1.57
NSX400-630 CVS 400-630	140 5.51	185 7.28	70 2.75	127.5 5.02	320 12.59	192.5 7.57	96 3.78	14 0.55	6 Ø6 6 Ø0.23	6 Ø6 6 Ø0.23	45 1.77	90 3.5	22.5 0.88	22.5 0.88	200 7.87	100 3.93	65 2.56
NSX100-250 with plug-in base	105 4.13	140 5.51	52.5 2.06	109 4.29	260 10.23	151 5.94	72 2.83	14 0.55	3 Ø6 3 Ø0.23	6 Ø6 6 Ø0.23	35 1.34	70 2.75	17. 5 0.68	17. 5 0.68	155 6.10	77.5 3.05	55 2.16
NSX400-630 with plug-in base	140 5.51	185 7.28	70 2.75	153 6.02	406 15.98	253 9.96	100 3.93	14 0.55	4 Ø06 4 Ø0.23	6 Ø6 6 Ø0.23	45 1.77	90 3.5	22.5 0.88	22.5 0.88	250 9.84	125 4.92	83 3.26

Please refer to PowerTag Energy 250 A & 630 A Installation Sheet for accurate and complete information on the installation of this product.

PowerLogic™ PowerTag Energy Monoconnect 250 A & 630 A

INS250 / INV100-250

INS320-630 / INV320-630

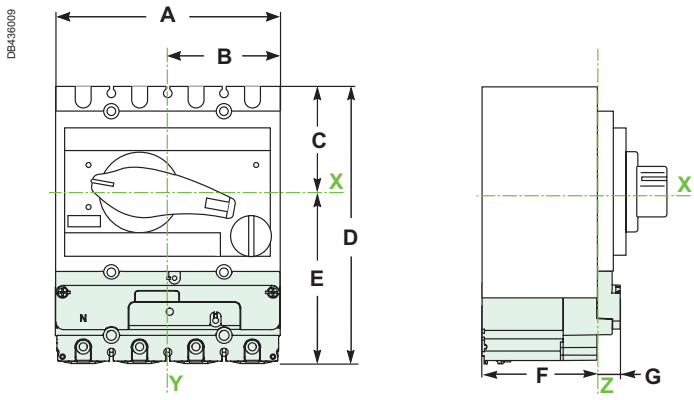

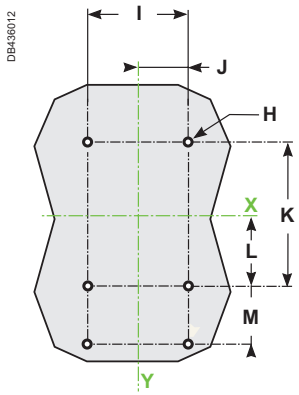

mm in	A	B	C	D	E	F	G	H	I	J	K	L	M
INS250 INV100-250	140 5.51	70 2.75	68 2.67	176 6.93	108 4.25	72 2.83	14 0.55	6 Ø6 6 Ø0.23	70 2.75	35 1.37	100 3.93	50 1.96	40 1.57
INS320-630 INV320-630	185 7.28	92.5 3.64	102.5 4.03	270 10.62	167.5 6.59	96 3.78	14 0.55	6 Ø6 6 Ø0.23	90 3.5	45 1.77	150 5.9	75 2.95	65 2.56

PowerTag Energy Monoconnect 250 A & 630 A weight

Type	Weight (g)
M250 3P	250
M250 3P+N	300
M630 3P	800
M630 3P+N	1000

Please refer to PowerTag Energy 250 A & 630 A Installation Sheet for accurate and complete information on the installation of this product.

PowerLogic™ PowerTag Energy Rope 200 A to 2000 A

IEC 61557-12 PMD-II/DD/K70/1

As per the above standard:

With its flexible and openable current sensors, this PowerTag Energy Rope can be installed easily on busbars and cables without having to disconnect the conductors, and is suitable for 3P or 3P+N networks. Its removable spring connector for voltage picking facilitates its installation, and the module can be mounted on a DIN rail or maintained with brackets where needed in a panel.

Main characteristics

PowerTag Energy Rope measures the following values in accordance with the IEC 61557-12 standard PMD-II/DD/K70/1:

- Energy (4 quadrants):
  - Active energy (kWh): total and partial, delivered and received.
  - Active energy per phase (kWh): total and partial, delivered and received.
  - Reactive energy (kVARh): total and partial, delivered and received.
  - Reactive energy per phase (kVARh): total and partial, delivered and received.
  - Apparent energy (kVAh): total and partial.
  - Apparent energy per phase (kVAh): total and partial.
- Real-time measurement values:
  - Voltages (V): phase-to-phase (U12, U23, U31) and phase-to-neutral (V1N, V2N, V3N).
  - Currents (A): per phase (I1, I2, I3), calculated neutral current when connected (IN).
  - Power:
    - Active power (W): total and per phase.
    - Reactive power (VAR): total and per phase.
    - Apparent power (VA): total and per phase.
  - Frequency (Hz).
  - Power factor: total and per phase.
- Voltage loss alarms:
  - PowerTag Energy Rope sensor sends a “voltage loss” alarm and the current-per-phase value before being de-energized.
  - At “voltage loss”, PowerTag Energy Rope adds an overload alarm if the current is higher than the rated current of the associated protective device.

Note: Functions listed above depends on Concentrator/Gateway.

PowerTag Energy Rope

PowerLogic™ PowerTag Energy Rope

Installation

PowerTag Energy Rope 18 mm module can be mounted on DIN rail or fastened with brackets anywhere in a panel. Then its openable current sensors have to be installed around conductors, cables or busbars, whatever they are insulated or not. Voltage pickings removable spring terminal has to be wired by 1 copper wire per phase with following characteristics:

Wire range

Solid	Stranded	Stranded with terminal ends
0.2...1.5 mm²	0.2...2.5 mm²	0.25...1.5 mm²
24...16 AWG	24...14 AWG	24...16 AWG

Neutral picking shall be connected to have phase-to-neutral voltages, energy per phase and power per phase provided.

PowerTag Energy Rope is mainly advised for ComPact NS, MasterPact NT and NW, MasterPact MTZ NA and HA, for retrofit, for group of loads, and for all other devices with a rating up to 2000 A.

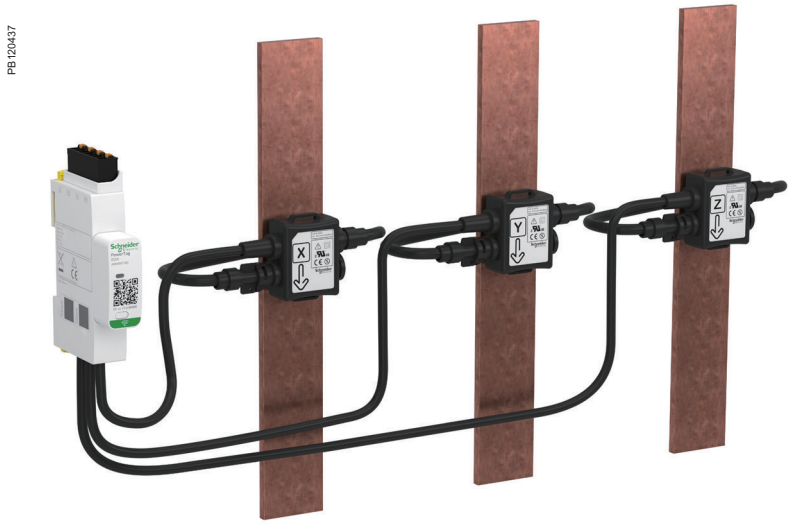

PowerLogic™ PowerTag Energy Rope 200 A to 2000 A

Technical specifications

Main characteristics (as per IEC 61557-12)			
Rated voltage	Un	Phase-to-neutral	100...277 VAC ± 20 %
		Phase-to-phase	173...480 VAC ± 20 %
Frequency			50/60 Hz
Maximum current	Imax		200 A / 600 A / 1000 A / 2000 A
Maximum operating current			1.2 x Imax
Saturation current			2 x Imax
Maximum consumption			3 VA
Starting current	Ist		120 mA / 400 mA / 600 mA / 1.2 A
Basic current	Ib		30 A / 100 A / 150 A / 300 A
Additional characteristic			
Operating temperature			-25 °C to +70 °C
Maximum primary conductor temperature			105 °C [2]
Storage temperature			-40 °C to +85 °C
Overvoltage category		As per IEC 61010-1	Cat. IV
Measuring category		As per IEC 61010-2-030	Cat. IV
Pollution degree			3
Altitude			Up to 2000 m without derating [1]
Degree of protection device			IP20 (IP40 front face)
			IK05
Radio-frequency communication			
ISM band 2.4 GHz			2.4 GHz to 2.4835 GHz
Channels		As per IEEE 802.15.4	11 to 26
Isotropic Radiated Power		Equivalent (EIRP)	0 dBm
Maximum transmission time			< 5 ms
Channel occupancy		For 1 device	messages sent every 5 seconds
Characteristics of measuring functions			
Function	Symbol	Performance category as per IEC 61557-12 (PMD-II/DD/K70/1)	Device measuring range (200 A / 600 A / 1000 A / 2000 A)
		Class	
Total active power (Active power per phase)	P	1	29 W (10 W) to 240 kW / 96 W (32 W) to 720 kW / 144 W (48 W) to 1200 kW / 288 W (96 W) to 2400 kW
Total reactive power (Reactive power per phase)	Q_A	2	36 VAR (12 VAR) to 240 kVAR / 120 VAR (40 VAR) to 720 kVAR / 180 VAR (60 VAR) to 1200 kVAR / 360 VAR (120 VAR) to 2400 kVAR
Total apparent power (Apparent power per phase)	S_A	2	46 VA (15 VA) to 240 kVA / 154 VA (51 VA) to 720 kVA / 231 VA (77 VA) to 1200 kVA / 461 VA (154 VA) to 2400 kVA
Active Energy: per phase, total, partial, delivered and received	E_a	1	0 to 281.10^9 kWh
Reactive energy: per phase, total, partial, delivered and received	E_{rA}	2	0 to 281.10^9 kVARh
Apparent energy: per phase, total, partial	E_{apA}	2	0 to 281.10^9 kVAh
Frequency	f	0.5	45 to 65 Hz
Phase current	I	1	120 mA to 400 A / 400 mA to 1200 A / 600 mA to 2000 A / 1.2 A to 4000 A
Neutral current	I_{NC}	2	
Voltages (Line to Line)	U	0.5	138 to 576 VAC
Power factor (per phase, total)	PF_A	1	-1 to 1

[1] Above 2000 m, please consult us.
[2] For higher value, please consult us.

PowerLogic™ PowerTag Energy Rope 200 A to 2000 A

A9MEM159●

PowerTag Energy Rope 200 A to 2000 A Commercial reference numbers

Commercial reference number	Type	Description
A9MEM1590	R200 3P/3P+N	PowerTag Energy Rope 200 A 3P / 3P+N
A9MEM1591	R600 3P/3P+N	PowerTag Energy Rope 600 A 3P / 3P+N
A9MEM1592	R1000 3P/3P+N	PowerTag Energy Rope 1000 A 3P / 3P+N
A9MEM1593	R2000 3P/3P+N	PowerTag Energy Rope 2000 A 3P / 3P+N

Check the Concentrators /Gateways compatibility and the list of Schneider Electric compatible devices with the Selection Guide pages 87 to 97.

Contact your Schneider Electric representative for complete ordering information.

PowerTag Energy Rope 200 A to 2000 A dimensions

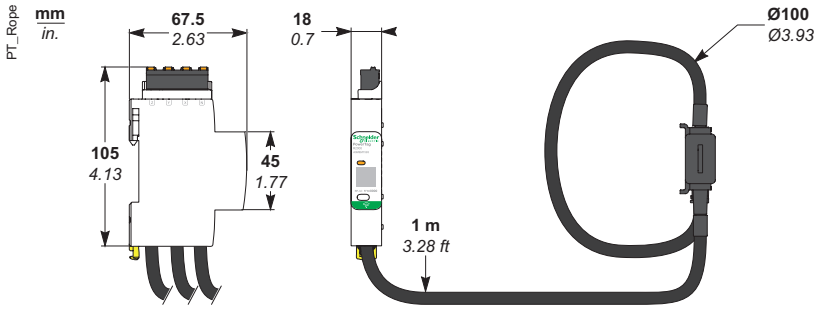

PowerTag Energy Rope 200 A to 2000 A weight

Type	Weight (g)
R200 3P/3P+N	360
R600 3P/3P+N	
R1000 3P/3P+N	
R2000 3P/3P+N	

Please refer to PowerTag Energy Rope 200 A to 2000 A Installation Sheet for accurate and complete information on the installation of this product.

PowerLogic™ PowerTag Energy

Selection guide for product compatibility*

(Compatibility for terminal not equipped with comb busbar)

PowerTag Energy 63 A

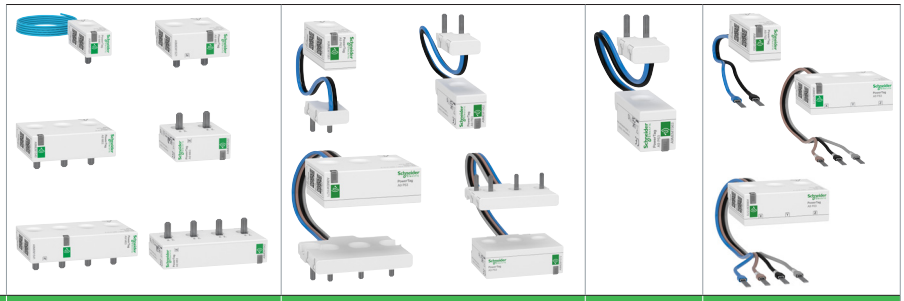

Products (AC network)	Mounting position	A9 M63	A9 P63	A9 P63 RCBO	A9 F63
Acti9/Multi9					
Circuit breakers					
iC60/iK60/DT60	Top	☑	-	-	-
	Bottom	☑	-	-	-
iC60 (double terminal)	Top	-	-	-	☑
	Bottom	-	-	-	☑
iC40	Top	-	☑	-	-
	Bottom	-	☑	-	-
DT40/iDPN/C40	Top	-	☑	-	-
	Bottom	-	☑	-	-
C120 ≤ 63 A NG125 ≤ 63 A	Top	-	-	-	☑ (1)
	Bottom	-	-	-	☑ (1)
iC65N-K (China) iC65 (China)	Top	☑	-	-	-
	Bottom	☑	-	-	-
iDPN (China)	Top	-	☑	-	-
	Bottom	-	☑	-	-
iKQ (1P+W PowerTag on each pole)	Top	NA	-	-	-
	Bottom	☑ (1P+W only)	-	-	-
N40	Top	-	☑	-	-
	Bottom	-	☑	-	-
Reflex iC60	Top	☑	-	-	-
	Bottom	☑	-	-	-
Reflex XC40	Top	☑	-	-	-
	Bottom	-	-	-	☑ (1)
C32/C45/C60/C65/K60/T60/ Multi9 OEM (C60N/H/L)	Top	☑	-	-	-
	Bottom	☑	-	-	-
Circuit breakers equipped with Vigi module					
iC60/iC65/iC60/iC65N-K with Vigi module	Top	☑ (CB)	-	-	-
	Bottom	-	-	-	☑ (1) (Vigi)
iC40 with Vigi iCG40	Top CB	-	☑ (CB)	-	-
	Top (Vigi)	-	☑ (2) (Vigi 1P+N)	-	-
	Bottom (Vigi)	-	-	-	☑ (Vigi 3P+N)
iC40 with "outgoer" Vigi module	Top	-	☑ (CB)	-	-
	Bottom	-	-	-	☑ (Vigi)
DT40/DPN/C40 with "group feeder" Vigi module	Top CB	-	☑ (CB)	-	-
	Top Vigi	-	☑ (Vigi 1P+N)	-	☑ (Vigi 3P+N)
DT40/DPN/C40 with "outgoer" Vigi module	Top	-	☑ (CB)	-	-
	Bottom	-	-	-	☑ (Vigi)
DT60 with Vigi TG60	Top CB	☑ (CB) only A9MEM1541	-	-	-
	Top Vigi	-	-	-	☑ (1) (Vigi)

(1) You may need to change the voltage measurement cable terminals of the PowerTag Energy F63 by other cable ends (wire AWG22/0.33 mm²) for a more suitable connection to this product.
(2) Product usually associated with a comb busbar

(*) Refer to the product catalog for technical characteristics

PowerLogic™ PowerTag Energy

Selection guide for product compatibility*

(Compatibility for terminal not equipped with comb busbar)

PowerTag Energy 63 A

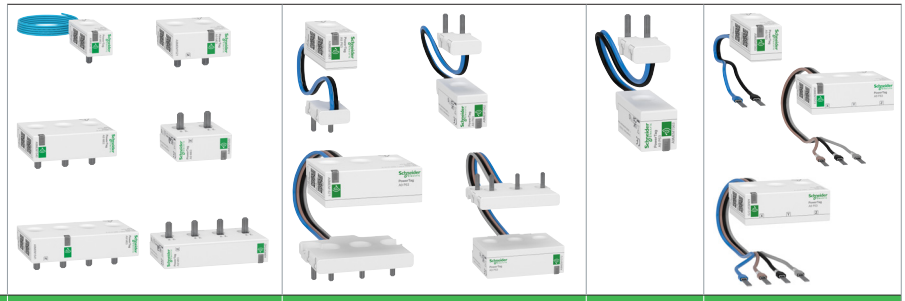

Products (AC network)	Mounting position	A9 M63	A9 P63	A9 P63 RCBO	A9 F63
Acti9/Multi9					
Circuit breakers equipped with Vigi module (cont')					
C120 ≤ 63 A NG125 ≤ 63 A with Vigi module	Top	-	-	-	☑ (1) (CB)
	Bottom	-	-	-	☑ (1) (Vigi)
Circuit breakers equipped with Arc fault detection unit					
iC60 with ARC unit	Top	☑ (CB)	-	-	-
	Bottom	-	-	-	☑ (add-on block)
iC40 with ARC unit	Top	-	☑ (CB)	-	-
	Bottom	-	-	-	☑ (add-on block)
Arc fault detection devices					
iC40N ARC / iCV40N VigiARC	Top	☑	-	-	-
	Bottom	☑	-	-	-
Residual current devices					
iID/iID K	Top	☑	-	-	-
	Bottom	☑	-	-	-
iID (double terminal)	Top	-	-	-	☑
	Bottom	-	-	-	☑
iID40	Top	-	☑ (2) (1P+N)	-	☑ (2) (3P+N)
	Bottom	☑	-	-	-
iDPN Vigi "outgoer" 1P+N	Top	-	☑	-	-
	Bottom	-	☑	-	-
iC60H RCBO/iC60H2 RCBO/ IKQE RCBO	Top	NA (fishbone)	-	-	-
	Bottom	-	-	☑	-
iC60 RCBO	Top	☑	-	-	-
	Bottom	☑	-	-	-
iCV40 "outgoer" 1P+N	Top	-	☑	-	-
	Bottom	-	☑	-	-
iCV40 "outgoer" 3P+N	Top	-	☑	-	-
	Bottom	-	-	-	☑
DPN Vigi/DT40 Vigi/C40 Vigi "outgoer" 1P+N	Top	-	☑	-	-
	Bottom	-	☑	-	-
DPN Vigi/DT40 Vigi/C40 Vigi/ iDPN Vigi "outgoer" 3P+N	Top	-	☑	-	-
	Bottom	-	-	-	☑
DPN Vigi K	Top	-	-	-	☑ (1)
	Bottom	-	-	-	☑ (1)
N40 Vigi "outgoer"	Top	-	☑	-	-
	Bottom	-	☑	-	-
iDc/ITG40/C40	Top Left	-	☑	-	-
	Top Right	-	☑	-	-

(1) You may need to change the voltage measurement cable terminals of the PowerTag Energy F63 by other cable ends (wire AWG22/0.33 mm²) for a more suitable connection to this product.
(2) Product usually associated with a comb busbar

(*) Refer to the product catalog for technical characteristics

PowerLogic™ PowerTag Energy

Selection guide for product compatibility*

(Compatibility for terminal not equipped with comb busbar)

PowerTag Energy 63 A

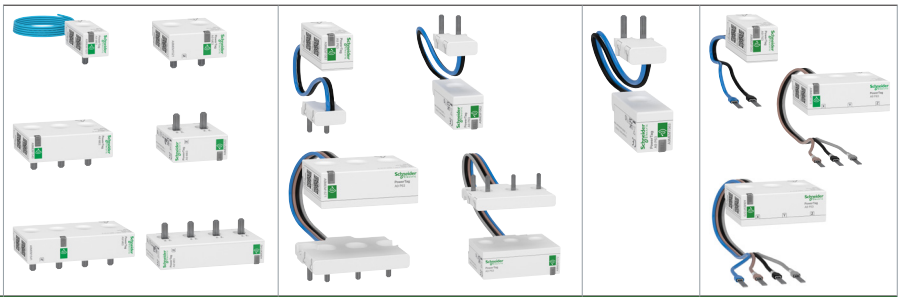

Products (AC network)	Mounting position	A9 M63	A9 P63	A9 P63 RCBO	A9 F63
Acti9/Multi9					
Residual current devices (cont')					
DCP Vigi	Top	☑	-	-	-
	Bottom	☑	-	-	-
C60H RCBO (Multi9)	Top	NA (fishbone)	-	-	-
	Bottom	-	-	☑	-
ID ≤ 63 A/ID K biconnect/ ID Type B ≤ 63 A	Top	☑	-	-	-
	Bottom	☑	-	-	-
RED/REDs/REDTest	Top	-	-	-	☑ (1)
	Bottom	-	-	-	☑ (1)
Switches					
iSW ≤ 63 A	Top	☑	-	-	-
	Bottom	☑	-	-	-
iSW-NA ≤ 63 A	Top	☑	-	-	-
	Bottom	☑	-	-	-
iSW 20/32 A	Top	-	-	-	☑
	Bottom	-	-	-	☑
i-NA ≤ 63 A	Top	☑	-	-	-
	Bottom	☑	-	-	-
NG125 NA ≤ 63 A	Top	-	-	-	☑ (1)
	Bottom	-	-	-	☑ (1)
Fuse disconnectors					
STI	Top	-	-	-	☑
	Bottom	-	-	-	☑
SBI 14x51/SBI 22x58 ≤ 63 A	Top	-	-	-	☑ (1)
	Bottom	-	-	-	☑ (1)
D01/D02	Top	-	-	-	☑ (1)
	Bottom	-	-	-	☑ (1)

(1) You may need to change the voltage measurement cable terminals of the PowerTag Energy F63 by other cable ends (wire AWG22/0.33 mm²) for a more suitable connection to this product.

(*) Refer to the product catalog for technical characteristics

PowerLogic™ PowerTag Energy

Selection guide for product compatibility*

(Compatibility for terminal not equipped with comb busbar)

PowerTag Energy 63 A

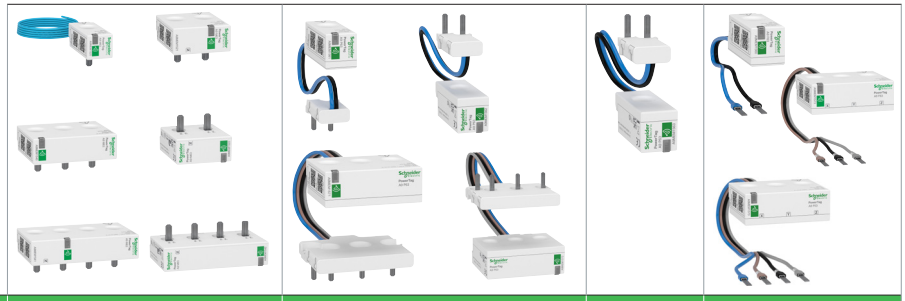

Products (AC network)	Mounting position	A9 M63	A9 P63	A9 P63 RCBO	A9 F63
TeSys					
Motor circuit breakers					
GV2	Top	-	-	-	☑ (1) (2)
	Bottom	-	-	-	☑ (1) (2)
GV3 ≤ 63 A	Top	-	-	-	☑ (1) (2)
	Bottom	-	-	-	☑ (1) (2)
Contactors					
TeSys D ≤ 63 A	Top	-	-	-	☑ Upstream only (1)
	Bottom	-	-	-	
TeSys K	Top	-	-	-	☑ Upstream only (1)
	Bottom	-	-	-	
Motor starter					
TeSys U	Top	-	-	-	☑ Upstream only (1)
	Bottom	-	-	-	

(1) You may need to change the voltage measurement cable terminals of the PowerTag Energy F63 by other cable ends (wire AWG22/0.33 mm²) for a more suitable connection to this product.
(2) PowerTag Energy sensors withstand motor starting in-rush currents. Environmental mission profile : Buildings as per 60721-3-3.

(*) Refer to the product catalog for technical characteristics

PowerLogic™ PowerTag Energy

Selection guide for product compatibility*

(Compatibility for terminal not equipped with comb busbar)

Products (AC network)		Mounting position	PowerTag Energy 160 A F160 3P / 3P+N
Acti9			
Circuit breakers			
C120 (with or without Vigi module)	3P / 3P+N	Top / Bottom	☑
NG125 (with or without Vigi module)	3P / 3P+N	Top / Bottom	☑
Residual current devices			
iID > 63 A	3P+N	Top / Bottom	☑
RCCB-ID 125 A	3P+N	Top / Bottom	☑
Fuse disconnectors			
SBI > 63 A	3P / 3P+N	Top / Bottom	☑
Switches			
NG125 NA	3P / 3P+N	Top / Bottom	☑
iSW > 63 A	3P / 3P+N	Top / Bottom	☑
iSW NA > 63 A	3P+N	Top / Bottom	☑
ComPact			
Circuit breakers			
NSXm	3P / 3P+N	Top / Bottom	☑ (5)
Switches			
NSXm NA	3P / 3P+N	Top / Bottom	☑ (5)
INS 80/100/125/160	3P / 3P+N	Top / Bottom	☑
PowerPact			
Circuit breakers			
B	3P / 3P+N	Top / Bottom	☑ (6)
TeSys			
Motor circuit breakers			
GV3 > 65 A	3P	Top / Bottom	☑
GV4	3P	Top / Bottom	☑
Contactors			
63 A < TeSys D ≤ 160 A	3P / 3P+N	Top	☑ Upstream only
TeSys F ≤ 160 A	3P / 3P+N	Top	☑ Upstream only

(5) It is advised to use EverLink connectors with control wire terminal (LV426970 for 3P / LV426971 for 4P)
(6) It is advised to use EverLink connectors with control wire terminal (LV426974 for 3P / LV426975 for 4P)

(*) Refer to the product catalog for technical characteristics

PowerLogic™ PowerTag Energy

Selection guide for product compatibility*

(Compatibility for terminal not equipped with comb busbar)

			PowerTag Energy 250 A		PowerTag Energy 630 A	
Products (AC network)		Mounting position	M250 3P	M250 3P+N	M630 3P	M630 3P+N
ComPact						
Circuit breakers						
NSX100/160/250 B/F/N/H/S/L/R/NA Fixed	3P	Bottom	☑	-	-	-
	4P	Bottom	-	☑	-	-
NSX400/630 F/N/H/S/L/R/NA Fixed	3P	Bottom	-	-	☑	-
	4P	Bottom	-	-	-	☑
NSX100/160/250 B/F/N/H/S/L/R/NA Plug-In (mounted on the base)	3P	Top / Bottom	☑	-	-	-
	4P	Top / Bottom	-	☑ (3)	-	-
NSX400/630 F/N/H/S/L/R/NA Plug-In (mounted on the base)	3P	Top / Bottom	-	-	☑ (4)	-
	4P	Top / Bottom	-	-	-	☑ (3) (4)
NS100/160/250 N/SX/H/L/NA Fixed	3P	Bottom	☑	-	-	-
	4P	Bottom	-	☑	-	-
NS400/630 N/H/L/NA Fixed	3P	Bottom	-	-	☑	-
	4P	Bottom	-	-	-	☑
NS100/160/250 N/SX/H/L/NA Plug-In (mounted on the base)	3P	Top / Bottom	☑	-	-	-
	4P	Top / Bottom	-	☑ (3)	-	-
NS400/630 N/H/L/NA Plug-In (mounted on the base)	3P	Top / Bottom	-	-	☑ (4)	-
	4P	Top / Bottom	-	-	-	☑ (3) (4)
Circuit breakers equipped with Vigi block						
NSX100/160/250 B/F/N/H/S/L/R/NA Fixed	3P	Bottom	☑	-	-	-
	4P	Bottom	-	☑	-	-
NSX400/630 F/N/H/S/L/R/NA Fixed	3P	Bottom	-	-	☑	-
	4P	Bottom	-	-	-	☑
NSX100/160/250 B/F/N/H/S/L/R/NA Plug-In (mounted on the base)	3P	Top	☑	-	-	-
NSX400/630 F/N/H/S/L/R/NA Plug-In (mounted on the base)	3P	Top	-	-	☑ (4)	-
Switches						
INS250/INV - 100/160/200/250	3P	Bottom	-	☑	-	-
	4P	Top / Bottom	-	☑ (3)	-	-
INS/INV - 320/400/500/630	3P	Bottom	-	-	-	☑
	4P	Top / Bottom	-	-	-	☑ (3)
TeSys						
Motor circuit breakers						
GV5, GV7	3P	Bottom	☑	-	-	-
GV6	3P	Bottom	-	-	☑	-
EasyPact						
Circuit breakers						
CVS 100-250	3P	Bottom	☑			
	4P	Bottom		☑		
CVS 400-630	3P	Bottom			☑	
	4P	Bottom				☑

(3) neutral on the right when mounted on top side
(4) when plate mounted, need to add a 4 mm intercalary under the PowerTag module (see ComPact NSX catalog)

(*) Refer to the product catalog for technical characteristics

PowerLogic™ PowerTag Energy

Selection guide for product compatibility*

(Compatibility for terminal not equipped with comb busbar)

			PowerTag Energy Rope			
Products (AC network)		Mounting position	R200 3P / 3P+N	R600 3P / 3P+N	R1000 3P / 3P+N	R2000 3P / 3P+N
ComPact						
Circuit breakers						
NS 630b	3P / 3P+N	Top / Bottom	-	☑	-	-
NS 800/1000	3P / 3P+N	Top / Bottom	-	-	☑	-
NS 1250/1600/1600b/2000	3P / 3P+N	Top / Bottom	-	-	-	☑
Switches						
INS/INV 630b	3P / 3P+N	Top / Bottom	-	☑	-	-
INS/INV 800/1000	3P / 3P+N	Top / Bottom	-	-	☑	-
INS/INV 1250/1600/2000	3P / 3P+N	Top / Bottom	-	-	-	☑
NS 630b NA	3P / 3P+N	Top / Bottom	-	☑	-	-
NS 800/1000 NA	3P / 3P+N	Top / Bottom	-	-	☑	-
NS 1250/1600/1600b/2000 NA	3P / 3P+N	Top / Bottom	-	-	-	☑
MasterPact						
Circuit breakers						
NT 06	3P / 3P+N	Top / Bottom	-	☑	-	-
NT 08/10	3P / 3P+N	Top / Bottom	-	-	☑	-
NT 12/16	3P / 3P+N	Top / Bottom	-	-	-	☑
NW 08/10	3P / 3P+N	Top / Bottom			☑	-
NW 12/16/20	3P / 3P+N	Top / Bottom	-	-	-	☑
Switches						
NT 06 HA	3P / 3P+N	Top / Bottom	-	☑	-	-
NT 08/10 HA	3P / 3P+N	Top / Bottom	-	-	☑	-
NT 12/16 HA	3P / 3P+N	Top / Bottom	-	-	-	☑
NW 08/10 NA/HA/HF	3P / 3P+N	Top / Bottom	-	-	☑	-
NW 12/16/20 NA/HA/HF	3P / 3P+N	Top / Bottom	-	-	-	☑
MTZ1 06 HA	3P / 3P+N	Top / Bottom	-	☑	-	-
MTZ1 08/10 HA	3P / 3P+N	Top / Bottom	-	-	☑	-
MTZ1 12/16 HA	3P / 3P+N	Top / Bottom	-	-	-	☑
MTZ2 08/10 NA/HA/HA10	3P / 3P+N	Top / Bottom	-	-	☑	-
MTZ2 12/16/20 NA/HA/HA10	3P / 3P+N	Top / Bottom	-	-	-	☑
TeSys						
Contactors						
TeSys D > 160 A	3P / 3P+N	Top	☑ Upstream only	-	-	-
160 A < TeSys F ⩽ 2000 A	3P / 3P+N	Top	☑ Upstream only	☑ Upstream only	☑ Upstream only	☑ Upstream only
Others						
Circuit breakers / Switches / Motor circuit breakers						
All products below 200 A	3P / 3P+N	Top / Bottom	☑	-	-	-
All products between 200 A and 600 A	3P / 3P+N	Top / Bottom	-	☑	-	-
All products between 600 A and 1000 A	3P / 3P+N	Top / Bottom	-	-	☑	-
All products between 1000 A and 2000 A	3P / 3P+N	Top / Bottom	-	-	-	☑

(*) Refer to the product catalog for technical characteristics

PowerLogic™ PowerTag Energy

Selection guide for concentrators / gateways compatibility*

Concentrators / gateways

		Wiser IP module Wiser IP module+ EER31800	PowerTag Link C PowerTag Link C+ A9XELC10	Smartlink SI B A9XMZA08 Smartlink SI D A9XMWA20	PowerTag Link A9XMWD20 PowerTag Link HD A9XMWD100
PowerTag Energy M63					
	A9MEM1520	☑	☑	☑	☑
	A9MEM1521	☑	☑	☑	☑
	A9MEM1522	☑	☑	☑	☑
	A9MEM1540	☑	☑	☑	☑
	A9MEM1541	☑	☑	☑	☑
	A9MEM1542	☑	☑	☑	☑
	A9MEM1543	☑	☑	-	☑
PowerTag Energy M63 Resi9					
	R9M20	☑	-	-	-
	R9M21	☑	-	-	-
	R9M22	☑	-	-	-
	R9M40	☑	-	-	-
	R9M41	☑	-	-	-
	R9M42	☑	-	-	-
	R9M43	☑	-	-	-
PowerTag Energy P63					
	A9MEM1561	☑	☑	☑	☑
	A9MEM1562	☑	☑	☑	☑
	A9MEM1563	☑	☑	☑	☑
	A9MEM1571	☑	☑	☑	☑
	A9MEM1572	☑	☑	☑	☑
PowerTag Energy F63					
	A9MEM1560	☑	☑	☑	☑
	A9MEM1564	-	-	-	☑
	A9MEM1570	☑	☑	☑	☑
	A9MEM1573	-	-	-	☑
	A9MEM1574	-	-	-	☑
PowerTag Energy F63 Resi9					
	R9M60	☑	-	-	-
	R9M70	☑	-	-	-

(*) Refer to the product catalog for technical characteristics

PowerLogic™ PowerTag Energy
Selection guide for concentrators / gateways compatibility*

Concentrators / gateways

		Harmony Hub ZBRN1 ZBRN2 ZBRN32	EcoStruxure™ Panel Server Universal PAS600●	Wireless Panel Server for PrismaSeT Active
PowerTag Energy M63				
	A9MEM1520	-	☑	☑
	A9MEM1521	-	☑	☑
	A9MEM1522	-	☑	☑
	A9MEM1540	-	☑	☑
	A9MEM1541	-	☑	☑
	A9MEM1542	-	☑	☑
	A9MEM1543	-	☑	-
PowerTag Energy M63 Resi9				
	R9M20	-	-	-
	R9M21	-	-	-
	R9M22	-	-	-
	R9M40	-	-	-
	R9M41	-	-	-
	R9M42	-	-	-
	R9M43	-	-	-
PowerTag Energy P63				
	A9MEM1561	-	☑	☑
	A9MEM1562	-	☑	☑
	A9MEM1563	-	☑	☑
	A9MEM1571	-	☑	☑
	A9MEM1572	-	☑	☑
PowerTag Energy F63				
	A9MEM1560	☑	☑	☑
	A9MEM1564	-	☑	-
	A9MEM1570	☑	☑	☑
	A9MEM1573	☑	☑	☑
	A9MEM1574	-	☑	-
PowerTag Energy F63 Resi9				
	R9M60	-	-	-
	R9M70	-	-	-

(*) Refer to the product catalog for technical characteristics

PowerLogic™ PowerTag Energy
Selection guide for concentrators / gateways compatibility*

Concentrators / gateways

		Wiser IP module Wiser IP module+ EER31800	PowerTag Link C PowerTag Link C+ A9XELC10	Smartlink SI B A9XMZA08 Smartlink SI D A9XMWA20	PowerTag Link A9XMWD20 PowerTag Link HD A9XMWD100
PowerTag Energy F160					
	A9MEM1580	-	☑ (PowerTag Link C+ only)	-	☑
PowerTag Energy M250-M630					
	LV434020	☑	☑	☑	☑
	LV434021	☑	☑	☑	☑
	LV434022	☑	☑	☑	☑
	LV434023	☑	☑	☑	☑
PowerTag Energy R200-R600-R1000-R2000					
	A9MEM1590	-	☑ (PowerTag Link C+ only)	-	☑
	A9MEM1591	-	☑ (PowerTag Link C+ only)	-	☑
	A9MEM1592	-	☑ (PowerTag Link C+ only)	-	☑
	A9MEM1593	-	☑ (PowerTag Link C+ only)	-	☑

(*) Refer to the product catalog for technical characteristics

PowerLogic™ PowerTag Energy
Selection guide for concentrators / gateways compatibility*

Concentrators / gateways

				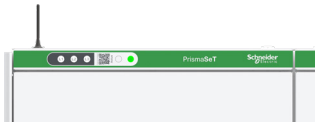
		Harmony Hub ZBRN1 ZBRN2 ZBRN32	EcoStruxure™ Panel Server Universal PAS600●	Wireless Panel Server for PrismaSeT Active
PowerTag Energy F160				
	A9MEM1580	☑	☑	☑
PowerTag Energy M250-M630				
	LV434020	☑	☑	☑
	LV434021	☑	☑	☑
	LV434022	☑	☑	☑
	LV434023	☑	☑	☑
PowerTag Energy R200-R600-R1000-R2000				
	A9MEM1590	☑	☑	☑
	A9MEM1591	☑	☑	☑
	A9MEM1592	☑	☑	☑
	A9MEM1593	☑	☑	☑

(*) Refer to the product catalog for technical characteristics

Wireless Products

Schneider Electric offers a range of wireless products designed for new builds or retrofit installations. These are reliable, low-cost and easy to use wireless solutions with long battery life that does not compromise performance

- PowerLogic™ PowerTag Control
- PowerLogic™ HeatTag

A9XMC2D3

SMT10020

PowerLogic™ PowerTag Control

PowerTag Control monitors circuits wirelessly, collecting status of daisy-chained circuit breakers and notifying the data concentrator of information status, such as OF, SD, Contractor or Impulse Relay position indication. These wireless input/output modules allow circuit control and status monitoring. Designed for use in commercial and building applications, they quickly and easily turn your distribution board into a connected panel.

PowerTag Control also connects to pulse relays or contactors for remote control within a building management system for non-critical loads, such as lighting.

Applications:

- Monitors your electrical installation from main incomer down to load level
- Suitable for various business, buildings, industrial and residential applications with easy integration in upper systems
- Supports and enables Energy efficiency programs and standards such as:

  - European Energy Efficiency Directive (EED)
  - Energy Performance of Buildings Directive (EPBD)
  - IEC 60364-8-1 “Low Voltage Electrical installations - Energy Efficiency”
  - EN 17267 “Energy Measurement and Monitoring plan”
  - ISO 50001 “Energy Management System”

A9XMC2D3 Image2

A9XMC2D3

PowerTag Control

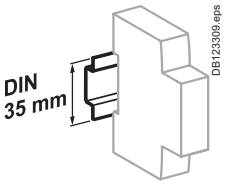

Clip on DIN rail 35 mm.

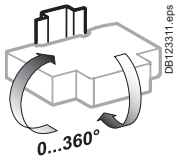

Indifferent position of installation.

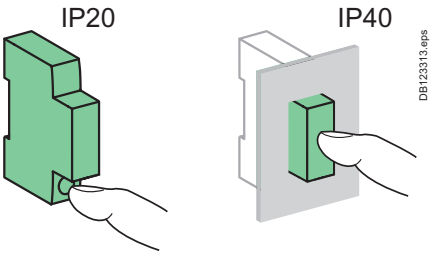

Technical characteristics

Main characteristics		
Power supply		230 V AC ± 20%
Frequency		50/60 Hz
Maximum consumption	IO	≤ 2 VA
	2DI	≤ 3 VA
Operating temperature		-25°C to +60°C
Storage temperature		-40°C to +85°C
Relative humidity (60068-2-78)		93 % at 40°C
Overvoltage category	As per IEC 61010-1	Cat. III
Altitude		≤ 2000 m
Pollution degree		3
Degree of protection according to IEC 60529	Front face	IP40
	Casing	IP20
	IK	05
Characteristics of inputs and outputs		
Digital input		
Type		230 V AC, dry contact
Digital output		
Type		230 V AC, dry contact
Relay type		Normally open or normally closed (3)
Applicable voltage on output		230 V AC ± 20%
Minimum/maximum current on output		10 mA / 2 A
Type of output order		Pulse or latch (3)
Pulse length in control mode with impulse relay		Nominal: 300 ms
Radio-frequency communication		
ISM band 2.4 GHz		2.4 GHz to 2.4835 GHz
Channels	As per IEEE 802.15.4	11 to 26
Isotropic Radiated Power	Equivalent (EIRP)	0 dBm
Channel occupancy	Messages sent	■ On event ■ Periodically (5s nominal)

(3) Setting adjustable

Dimensions (mm)

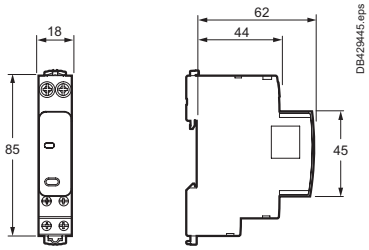

Weight (g)

PowerTag C	
PowerTag C IO 230 V	80
PowerTag C 2DI 230 V	75

Connection

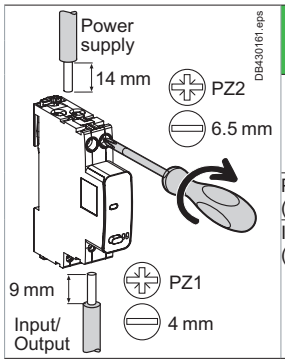

Terminals	Tightening torque	Copper cables		
		Rigid	Flexible	Flexible with ferrule
Power supply (Top)	2 N.m	1 to 16 mm² (AWG: 18...6)	0.5 to 10 mm² (AWG: 21...8)	-
Input/Output (Bottom)	1 N.m	1x: 1 to 6 mm² (AWG: 18...10) 2x: 1.5 to 2.5 mm² (AWG: 16...14)	1x: 0.5 to 4 mm² (AWG: 21...12) 2x: 1.5 to 2.5 mm² (AWG: 16...14)	1x: 0.5 to 4 mm² (AWG: 21...12) 2x: -

PowerTag Control

PowerTag C IO module

- Compatible with horizontal comb busbars 9 mm modules
- Automatic cable guiding in the correct position: terminals with guard

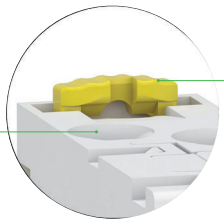

- Assembly and disassembly by operating toggle latches at the top and bottom of the products

Status LED

- Provide information about PowerTag C status

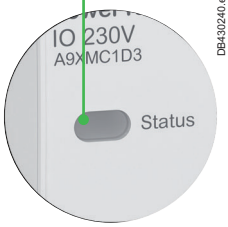

- Insulated terminals IP20

Logo

- Wireless communication device

Push button

- Local output control
- Decommissioning

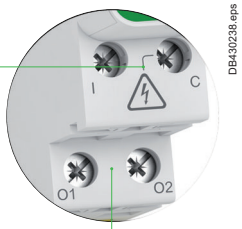

Monitoring / Back loop circuit

- "I" digital input terminal
- "C" common powered terminal 230 V AC

Control circuit

- Logical output relay
- "O" output terminals 230 V AC - 2 A max.

PowerTag Control

PowerTag C 2DI module

- Compatible with horizontal comb busbars 9 mm modules
- Automatic cable guiding in the correct position: terminals with guard

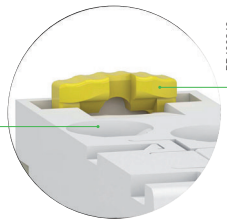

- Assembly and disassembly by operating toggle latches at the top and bottom of the products

- Insulated terminals IP20

Status LED

- Provide information about PowerTag C status

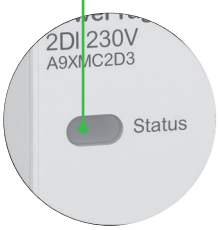

Logo

- Wireless communication device

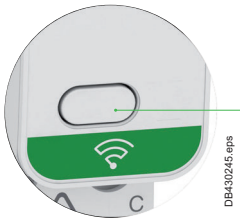

Flush mounted push button

- Decommissioning

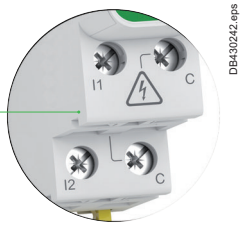

Monitoring circuits

- "I" digital input terminals
- "C" common powered terminals 230 V AC

PowerLogic™ HeatTag

Wireless Sensor for early detection of overheating cables

The PowerLogic™ HeatTag sensor analyzes gas and airborne particles helping facility manager to anticipate and act before smoke appears or an electrical fire starts.

Electrical fires generate huge losses in commercial and industrial buildings, interrupting production and delaying service delivery. These losses can be prevented if early detection of component overheating is accurately detected and alarmed.

PowerLogic™ HeatTag helps prevent electrical cabinets from being damaged by analyzing airborne gas and particles and sending alerts before smoke appears or an electrical fire starts. HeatTag is much more than a fire or smoke detector - it scientifically detects overheating in electrical installations before any damage is done.

PB120568

SMT10020

The solution for

Markets that can benefit from a solution that includes PowerLogic™ HeatTag smart sensors:

- Buildings
- Industry
- Healthcare
- Data Center and networks
- Infrastructure

Benefits

System integrators' benefit

- Ease of integration
- Ease of setup
- Cost effectiveness
- Seamless integration with EcoStruxure™ solutions

Panel builders' benefit

- No settings
- Nominal environment auto-learning to avoid false alerts
- Concentrator auto-discovery
- Alerts generated by a powerful algorithm integrated in HeatTag

End users' benefit

- Ease of use
- Prevents fire damage and associated costs
- Comprehensive, consistent and superior performance
- Maximize uptime, eliminate faults, and enhance safety

Competitive advantages

- Easy to install and operate
- Suitable for non forced ventilated cabinets ≥ IP31
- Immediately detects overheating in cables and connections
- More than a smoke detector or heat sensor
- 3 levels of alert recording
- Monitors air quality index
- Continuous improvements of algorithms

Power management solutions

Schneider Electric provides innovative power management solutions to increase your energy efficiency and cost savings, maximize electrical network reliability and availability, and optimize electrical asset performance.

Conformity of standards

- IEC/UL 61010-1
- IEC 61010-2-201
- IEC 61326-1
- IEC61326-2-3
- ETSI EN 301 489-1
- ETSI EN 301 489-17
- ETSI EN 300 328
- EN 62311
- EN IEC 63000
- IEEE 802.15.4 protocol
- FCC and IC certified

HeatTag sensors

PB120568

PowerLogic™ HeatTag sensor

PB120569

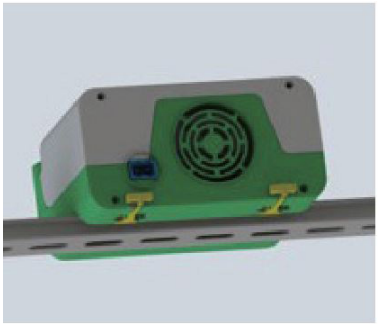

HeatTag rear view showing fan

PB120570

HeatTag sensor DIN mounted

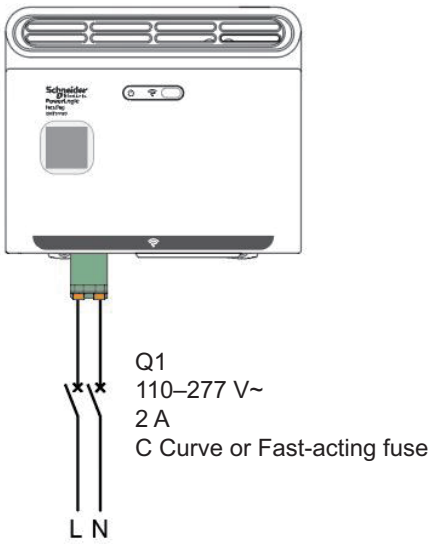

HeatTag features

Sensor Characteristics		
Temperature measurement	Measurement range	-15 °C / +70 °C (5 °F to 158 °F)
	Measurement accuracy	-1.1 °C / +1.1 °C
	Default transmission period	60 seconds (higher in case of high wireless data traffic)
Humidity measurement	Measurement range	15–90 %
	Measurement accuracy	±9 RH %
	Default transmission period	60 seconds (higher in case of high wireless data traffic)
Air quality	Index (0 to 10), alert generation when index ≥10	
Test alert after pairing	During first 30 minutes	
Environment auto-learning phase	8 hours after the first 30 minutes	
Mechanical Characteristics		
Dimensions (W x H x D)		108 x 107 x 55 mm
Weight		270 g
Degree of protection (IEC 60529)		IP 20
Electrical Characteristics		
Supply voltage		110–277 V AC, -15 % / +15 %
Frequency		50–60 Hz
Max. consumption		0.1 A
Operating temperature		-15 °C / +70 °C (5 °F to 158 °F)
Storage temperature		-20 °C / +85 °C (-4 °F to 185 °F)
Relative humidity in operation		15–90 %
Altitude of use		0–2000 m (0–6500 ft)
Degree of pollution (IEC 60664-1)		3
Overvoltage category		OVC III
Commercial Reference Number		
PowerLogic™ HeatTag Sensor		SMT10020

PB120573

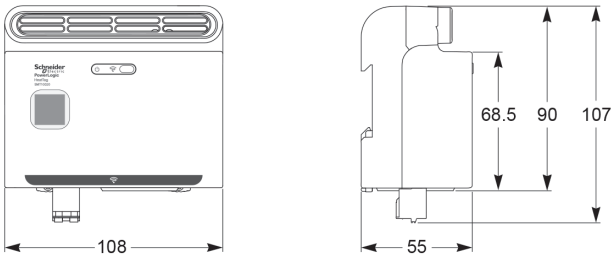

HeatTag sensor dimensions. See the appropriate **Installation Guide**.

PB120572

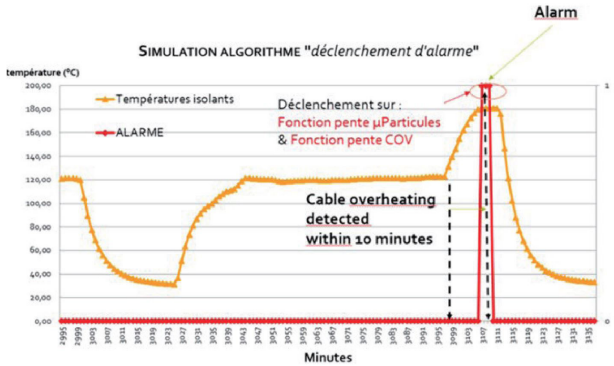

HeatTag simulation algorithm display

NOTE: Do not use HeatTag as a safety device or to replace fire protection devices. Please see the appropriate **User Guide** for this product.

Basic Multi-function Metering

A range of meters designed for cost management and simple network management. Affordable to buy and easy to choose, the highly-capable PowerLogic™ PM5000 and PM5350 series meters are designed to provide the best combination of features to match all your energy cost management needs.

As well as pin-point energy savings, optimal equipment efficiency and utilisation, basic multi-function meters perform a high level assessment of the power quality in an electrical network.

- PowerLogic™ PM5000
- PowerLogic™ PM5350
- PowerLogic™ PM5350IB
- PowerLogic™ PM5350PB
- PowerLogic™ PM5350P

PB117510

PB111770

METSEPM5110

METSEPM5560

PowerLogic™ PM5000 series

The PowerLogic™ PM5000 series power meters are the new benchmark in affordable, precision metering.

The value you want, the precision you need. Compact, affordable power meters with high-end cost capabilities and basic mobile energy management.

Applications

Capable of essential cost management:

- Sub-billing/tenant metering [(+1)]
- Equipment sub-billing
- Energy cost allocation

Also ideal for electrical network management:

- Track real-time power conditions
- Monitor control functions
- Provide basic power quality values
- Detect and capture voltage sag and swell events
- Monitor residual current
- Analyze equipment and network status
- BACnet/IP, EtherNet/IP, and DNP3.0 protocol support

PB118061

METSEPM5760

[(+1)] Subjected to local regulations.

The solution for

Markets that can benefit from a solution that includes PowerLogic™ PM5000 series meters:

- Buildings
- Industry
- Healthcare
- Data Center and networks
- Infrastructure

Benefits

System integrators' benefit

- Ease of integration
- Ease of setup
- Cost effectiveness

Panel builders' benefit

- Ease of installation
- Cost effectiveness
- Aesthetically pleasing
- Simplified ordering
- Low Voltage DC control power option
- Analog inputs options

End users' benefit

- Ease of use
- Precision metering & sub-billing [+2]
- Billing flexibility
- Comprehensive, consistent and superior performance
- Maximize uptime, eliminate faults, and enhance safety
- Cybersecurity features

Competitive advantages

- Easy to install and operate
- Easy for circuit breaker monitoring and control
- WAGES monitoring
- Data logging up to 16 parameters
- Power quality analysis up to 63rd harmonics
- Load management combined with alarm and timestamping
- High performance and accuracy
- Residual Current Monitoring (RCM) in PM56xx[+4] and PM57xx[+4]
- Voltage sag and swell detection with waveform capture
- MID ready compliance for legal billing application
- Onboard BACnet/IP, EtherNet/IP, and DNP3.0 protocol support
- PM5310R [+3] and PM5320R [+3] are enabled to connect with LVCT for faster installations

[+2] Subjected to local regulations.
[+3] PM5310R and PM5320R must be used with Schneider Electric's "Quick Click" 3-in-1 LVCTs.
[+4] PM5660, PM5661, PM5760, PM5761 must be used with Toroids.

Power management solutions

Schneider Electric provides innovative power management solutions to increase your energy efficiency and cost savings, maximize electrical network reliability and availability, and optimize electrical asset performance.

Conformity of standards

- BS/EN/IEC 61557-12:2018/ AMD1:2021
- BS/EN/IEC 62052-11:2020 edition 2
- IEC 62052-31:2015
- BS/EN/IEC 62053-22:2020 edition 2
- BS/EN/IEC 62053-23:2020 edition 2
- IEEE 802.3
- EN 50470-1:2006
- EN 50470- 3:2006
- CE and UKCA as per IEC/BS 61010-1 edition 3
- cULus as per UL 61010-1 edition 3
- BS/EN/IEC 61010-2-30:2017
- BS/EN/IEC 61326-1: edition 3
- FCC part 15 Class B
- EN 55022 Class B
- BACnet/IP - BTL listed (B-ASC)
- EtherNet/IP - ODVA certified
- ANSI C12.1-2008 (PM55xx)
- ANSI C12.20 Class 0.2 & 0.5
- Align with cyber security guidelines as per IEC 62443
- Type A as per IEC 62020 for RCM

Meets IEC 61557-12 PMD/[SD|SS]/K70/0.5 for PM5100 and PM5300
Meets IEC 61557-12 PMD/[SD|SS]/K70/0.2 for PM5500, PM5600, PM5700

- Legal billing compliance
  - MID compliance is compulsory for billing applications across Europe
  - In addition to billing applications, for facility managers responsible for energy cost
  - MID means same level of quality as a billing meter

MID Certified according to MID Directive, Annex "B" + Annex "D" for legal metrology relevant to active electrical energy meters (see Annex MI-003 of MID). Can be used for fiscal (legal) metrology.

MID ready compliance, EN 50470-1/3 – Class C

PM5000 series

PB118062

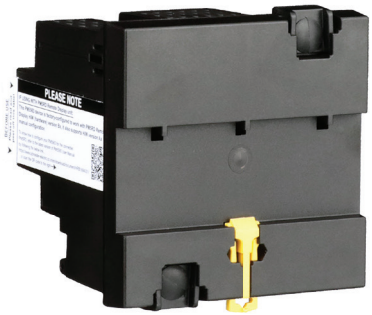

PowerLogic™ PM5563 meter

PB118063

PowerLogic™ PM5563 remote display front ISO

PB118064

PowerLogic™ PM5563 remote display rear ISO

PowerLogic™ PM5100, PM5300 and PM5500 series

The PowerLogic™ PM5000 power meter is the ideal fit for cost management applications. Designed for use in both energy management systems and building management systems, it provides the measurement capabilities needed to allocate energy usage, perform tenant metering and sub-billing, pin-point energy savings, optimize equipment efficiency and utilization, and perform a high level assessment of the power quality of the electrical network.

In a single 96 x 96 mm unit, with a graphical display, (plus optional remote display) all three phases, neutral and ground can be monitored simultaneously. The bright, anti-glare display features large characters and powerful backlighting for easy reading even in extreme lighting conditions and viewing angles. Easy to understand menus, text in 8 selectable languages, icons and graphics create a friendly environment to learn about your electrical network. Ethernet gateway and enhanced cyber security. These are highly accurate devices with global billing certifications.

Applications

- Cost management: Cost saving opportunities become clear once you understand how and when your facility uses electricity. The PowerLogic™ PM5000 series meters are ideal for:
  - Sub-billing / tenant metering: Allows a landlord, property management firm, condominium association, homeowners association, or other multi-tenant property to bill tenants for individual measured utility (electricity) usage depending on the local regulations. MID approved meters for billing applications across Europe.
  - Cost allocation: Allocate energy costs between different departments (HVAC, indoor and outdoor lighting, refrigeration, etc.), different parts of an industrial process or different cost centres. Cost allocation systems can help you save money by making changes to your operation, better maintaining your equipment, taking advantage of pricing fluctuations, and managing your demand.
- Network management: Improving reliability of the electrical network is key for success in any business. Monitoring values such as voltage levels, harmonics distortions, voltage unbalance, residual current, voltage sag and swell will help you to ensure proper operation and maintenance of your electrical network and equipment. PowerLogic™ PM5000 series meters are the perfect tool for:
  - Basic Power Quality monitoring: Power quality phenomena can cause undesirable effects such as heating in transformers, capacitors, motors, generators and misoperation of electronic equipment and protection devices.
  - Min/ Max monitoring (with timestamp): Understanding when electrical parameters, such as voltage, current and power demand, reach maximum and minimum values will give you the insight to correctly maintain your electrical network and assure equipment will not be damaged.
  - Alarming: alarms help you to be aware of any abnormal behaviour on the electrical network in the moment it happens.
  - WAGES monitoring: take advantage of the input metering on PM5000 meters to integrate measurements from third party devices such as water, air, gas, electricity or steam meters.
  - Residual current monitoring: measures leakage current flowing in TN & TT network system.
  - Voltage sags and swells: measures and captures wave form in the event of voltage sags and swells in the network.

- Main characteristics
  - Easy to install
    - Mounts using two clips, in standard cut out for DIN 96 x 96 mm, no tools required. Compact meter with 72 mm (77 mm for PM5500) depth connectable up to 690 V L-L without voltage transformers for installations compliant with category III. Optional remote display (PM5563). Ethernet gateway functionality via RS-485 port.
  - Easy to operate
    - Intuitive navigation with self-guided, language selectable menus, six lines, four concurrent values. Two LEDs on the meter face help the user confirm normal operation with a green LED - heartbeat/communications indicator, and the amber LED - customizable either for alarms or energy pulse outputs. Onboard web pages (PM5500) show real-time and logged information, and verify communications.
  - Easy circuit breaker monitoring and control
    - The PM5300 provides two relay outputs (high performance Form A type) with capability to command most of the circuit breaker coils directly. For Digital Inputs, monitored switches can be wired directly to the meter without external power supply by using whetting output voltage.
    - PM5500 series have 4 status inputs (digital) and 2 digital output (solid state) to use for WAGES monitoring, control and alarm annunciation.

Accurate energy measurement for precise cost allocation:

	PM5100	PM5300	PM5500	PM5600	PM5700
IEC 62053-22 (Active Energy)	Class 0.5S	Class 0.5S	Class 0.2S	Class 0.2S	Class 0.2S
IEC 62053-23 (Reactive Energy)	Class 1.0	Class 1.0	Class 1.0	Class 1.0	Class 1.0

PM5000 series

PB111777

PowerLogic™ PM5500 meter

PB111772

PowerLogic™ PM5300 meter

PB111768

PowerLogic™ PM5100 meter

Native multi-protocol support

The PM55/PM56/PM5700 is now easier than ever to integrate into new and existing BMS systems. With native BACnet/IP protocol support, meters can simultaneously communicate via BACnet and Modbus in applications where multiple software systems are used (building management and energy management systems).

The PM55/PM56/PM5700 series has been tested and certified in accordance with BACnet Testing Laboratories (BTL) requirements and Ethernet IP protocol as per ODVA requirements.

- PM55/PM56/PM5700 Direct metering of neutral current
  - The PM55/PM56/PM5700 has a fourth CT for measuring neutral current. In demanding IT applications, where loads are non-linear (i.e. switching power supplies on computers/servers), measuring neutral current is essential to avoid overload and resulting outage.
  - Power Quality analysis
  - The PM5000 offers Total Harmonic Distortion (THD/thd), Total Demand
  - Distortion (TDD) measurements and individual harmonics (odd) magnitudes and angles for voltage and current:

	PM5100	PM5300	PM55/56/5700
Individual Harmonics	magnitudes up to 15th	magnitudes up to 31st	magnitudes & angles up to 63rd

  - These types of power quality parameters help to identify the source of harmonics that can harm transformers, capacitors, generators, motors and electronic equipment.
- Load management
  - Peak demands with time stamping are provided. Predicted demand values can be used in combination with alarms for basic load shedding applications.
- Alarming with time stamping
  - A different combination of set point driven alarms and digital alarms with 1s time stamping are available in the PM5000 family:

	PM5100	PM5300	PM55/56/5700
Set point driven alarms	29	29	29 or 33*
Unary	4	4	4
Digital	–	2	4 or 2
Boolean / Logic	–	–	10
Custom defined	–	–	5

*Applicable in specific meter models. 2 alarms for disturbance (Sag/ Swell).

  - Alarms can be visualized as Active (the ones that have picked up and did not drop out yet) or Historical (the ones that happened in the past). Alarms can be programmed and combined to trigger digital outputs and mechanical relays (PM5300).
  - The PM5000 series keeps an alarm log with the active and historical alarms with date and time stamping. SMTP protocol for receiving alarm conditions via email and text. SNTP protocol for date/time network synchronization.
- Load timer
  - A load timer can be set to count load running hours based on a minimum current withdraw, adjustable to monitor and advise maintenance requirements on the load.
- High Performance and accuracy
  - IEC 61557-12 Performance measuring and monitoring devices (PMD). Defines the performance expectation based on classes. It defines the allowable error in the class for real and reactive power and energy, frequency, current, voltage, power factor, voltage unbalance, voltage and current harmonics (odds), voltage THD, current THD, as well as ratings for temperature, relative humidity, altitude, start-up current and safety. It makes compliant meters readings comparable - they will measure the same values when connected to the same load.

PM5000 series

PM5000 series feature selection

	PM5100		PM5300					
	PM5100	PM5110	PM5310	PM5310R (+5)	PM5320	PM5320R (+5)	PM5330	PM5340
Installation								
Fast installation, panel mount with integrated display	■	■	■	■	■	■	■	■
Fast installation, DIN rail mountable	–	–	–	–	–	–	–	–
Accuracy								
Class	CL 0.5S	CL 0.5S	CL 0.5S	CL 0.5S	CL 0.5S	CL 0.5S	CL 0.5S	CL 0.5S
Display								
Backlit LCD, multilingual, bar graphs, 6 lines, 4 concurrent values	■	■	■	■	■	■	■	■
Power and energy metering								
3-ph voltage, current, power, demand, energy, frequency, power factor	■	■	■	■	■	■	■	■
Multi-tariff	–	–	4	4	4	4	4	4
MID ready compliance, EN50470-1/3, Annex B & Annex D Class C	–	PM5111	–	–	–	–	PM5331	PM5341
Power quality analysis								
THD, thd, TDD	■	■	■	■	■	■	■	■
Harmonics, individual (odd) up to	15th	15th	31st	31st	31st	31st	31st	31st
Waveform capture & sag/ swell detection	–	–	–	–	–	–	–	–
I/Os and relays								
Digital inputs/ Digital output	1DO	1DO	2DI/2DO	2DI/2DO	2DI/2DO	2DI/2DO	2DI/2DO	2DI/2DO
Relays	–	–	–	–	–	–	2	2
Analog inputs	–	–	–	–	–	–	–	–
Residual Current inputs	–	–	–	–	–	–	–	–
Alarms and control								
Alarms	33	33	35	35	35	35	35	35
Set point response time, seconds	1	1	1	1	1	1	1	1
Single and multi-condition alarms	–	–	■	■	■	■	■	■
Boolean alarm logic	–	–	–	–	–	–	–	–
Memory for data logging	–	–	256KB	256KB	256KB	256KB	256KB	256KB
Communications								
Serial ports with modbus protocol	–	1	1	1	–	–	1	–
Ethernet port with Modbus TCP protocol	–	–	–	–	1	1	–	1
BACnet/IP protocol	–	–	–	–	■	■	–	■
EtherNet/IP protocol	–	–	–	–	–	–	–	–
DNP3.0 over Ethernet	–	–	–	–	–	–	–	–
Onboard web server with web pages	–	–	–	–	–	–	–	–
Serial to Ethernet gateway	–	–	–	–	–	–	–	–
Ref. number followed with METSE*	PM5100	PM5110	PM5310	PM5310R (+5)	PM5320	PM5320R (+5)	PM5330	PM5340
*See table below for complete commercial reference numbers								

(+5) PM5310R and PM5320R must be used with Schneider Electric's "Quick Click" 3-in-1 LVCTs

PM5000 series

PM5000 series feature selection

	PM5500					PM5600		PM5700
	PM5560	PM5563	PM5563RD	PM5570	PM5580	PM5650	PM5660	PM5760
Installation								
Fast installation, panel mount with integrated display	■	–	–	■	■	■	■	■
Fast installation, DIN rail mountable	–	■	■	–	–	–	–	–
Accuracy								
Class	CL 0.2S	CL 0.2S	CL 0.2S	CL 0.2S	CL 0.2S	CL 0.2S	CL 0.2S	CL 0.2S
Display								
Backlit LCD, multilingual, bar graphs, 6 lines, 4 concurrent values	■	–	■	■	■	■	■	■
Power and energy metering								
3-ph voltage, current, power, demand, energy, frequency, power factor	■	■	■	■	■	■	■	■
Multi-tariff	8	8	8	8	8	8	8	8
MID ready compliance, EN50470-1/3, Annex B & Annex D Class C	PM5561	–	–	–	–	–	PM5661	PM5761
Power quality analysis								
THD, thd, TDD	■	■	■	■	■	■	■	■
Harmonics, individual (odd) up to	63rd	63rd	63rd	63rd	63rd	63rd	63rd	63rd
Waveform capture & sag/ swell detection	–	–	–	–	–	8 cycles @ 128 samples/cycle	–	8 cycles @ 128 samples/cycle
I/Os and relays								
Digital inputs/ solid state Digital output	4DI/2DO	4DI/2DO	4DI/2DO	2DI/2DO	4DI/2DO	4DI/2DO	2DI/2DO	2DI/2DO
Relays	–	–	–	–	–	–	–	–
Analog inputs	–	–	–	2	–	–	–	–
Residual Current inputs	–	–	–	–	–	–	2	2
Alarms and control								
Alarms	52	52	52	50	52	54	54	56
Set point response time, seconds	1	1	1	1	1	1	1	1
Single and multi-condition alarms	■	■	■	■	■	■	■	■
Boolean alarm logic	■	■	■	■	■	■	■	■
Memory for data logging	1.1 MB	1.1 MB	1.1 MB	1.1 MB	1.1 MB	1.1 MB	1.1 MB	1.1 MB
Communications								
Serial ports with modbus protocol	1	1	1	1	1	1	1	1
Ethernet port with Modbus TCP protocol	2 (+6)	2 (+6)	2 (+6)	2 (+6)	2 (+6)	2 (+6)	2 (+6)	2 (+6)
BACnet/IP protocol	■	■	■	■	■	■	■	■
EtherNet/IP protocol	■	■	■	■	■	■	■	■
DNP3.0 over Ethernet	■	■	■	■	■	■	■	■
Onboard web server with web pages	■	■	■	■	■	■	■	■
Serial to Ethernet gateway	■	■	■	■	■	■	■	■
Ref. numbers with METSE*	PM5560	PM5563	PM5563RD	PM5570	PM5580	PM5650	PM5660	PM5760
*See table below for complete commercial reference numbers								

(+6) 2 Ethernet ports for daisy chain, one IP address.

PM5000 series

PM5000 technical specifications

		PM5100	PM5300	PM5500	PM5600	PM5700
Use on LV and MV systems		■				
Basic metering with THD and min/max readings		■				
Instantaneous rms values						
Current	Average, per phase, neutral and ground (PM5500)	■				
Voltage	Average, per phase L–L and L–N	■				
Frequency	Any available phase	■				
Real, reactive, and apparent power	Total and per phase	Signed, Four Quadrant				
True Power Factor	Average and per phase	Signed, Four Quadrant				
Displacement PF	Average and per phase	Signed, Four Quadrant				
% Unbalanced I, V L-N, V L-L		■				
Direct monitoring of neutral current		–		■	■	■
Energy values						
Accumulated Active, Reactive and Apparent Energy		Received/Delivered; Net and absolute; Time Counters				
Demand value						
Current average		Present, Last, Predicted, Peak, and Peak Date Time				
Active power		Present, Last, Predicted, Peak, and Peak Date Time				
Reactive power		Present, Last, Predicted, Peak, and Peak Date Time				
Apparent power		Present, Last, Predicted, Peak, and Peak Date Time				
Peak demand with timestamping D/T for current and three powers		■				
Demand calculation	Sliding, fixed and rolling block, thermal methods	■				
Synchronisation of the measurement window to input, communication command or internal clock		■				
Settable Demand intervals		■				
Demand synchronization with pulse input		–	■			
Other measurements						
I/O timer		■				
Operating timer		■				
Load timer		■				
Alarm counters and alarm logs		■				
Power quality measurements						
THD, thd (Total Harmonic Distortion) I, V L-N, V L-L		I, V L-N, V L-L				
TDD (Total Demand Distortion)		■				
Individual harmonics (odds)		15th (PM5110)	31st	63rd		
Neutral Current metering with ground current calculation		–	–	■		
Waveform capture and sag/swell detection		–	–	–	8 cycles @ 128 samples/cycle	
Data recording						
Min/max of instantaneous values, plus phase identification (+7)		■				
Alarms with 1s timestamping (+7)		■				
Data logging			2 fixed parameters kWh and kVAh with configurable interval & duration (e.g. 2 parameters for minimum 60 days at 15–minute intervals)	Up to 14 selectable parameters with configurable interval and duration (e.g. 6 parameters for minimum 90 days at 15–minute intervals)		
Min/max log		■	■	■		
Maintenance, alarm and event logs			■	■		
Customisable data logs		–		■		
RTC with battery back up		3 years (when meter is in Power OFF condition)				
Display resolution		5 digits for Energy and other parameters with auto scaling				
Preset Energy and Energy scaling		Available in selected references				

(+7) Stored in non-volatile memory

PM5000 series

PM5000 technical specifications

		PM5100	PM5300	PM5500	PM5600	PM5700
Inputs / Outputs / Mechanical Relays						
Digital inputs		–	2	4 in PM5560, PM5561, PM5562, PM5563, PM5580, PM5650 2 in PM5570, PM5660, PM5661, PM5760, PM5761		
Digital outputs		1 (kWh only)	2	2 (Solid state)		
Form A Relay outputs		–	2	–		
Analog inputs		–	–	2 for PM5570	–	–
Residual Current inputs		–	–		2 for PM5660	2 for PM5760
Timestamp resolution in seconds		1	1	1	1	1
Whetting source		–	24 V DC, 8 mA	–	–	–
Type of measurement: True rms on three-phase (3P, 3P + N)		64 samples per cycle		128 samples per cycle		
Measurement accuracy	IEC 61557-12	PMD/[SD|SS]/K70/0.5		PMD/[SD|SS]/K70/0.2		
	Active Energy	Class 0.5S as per IEC 62053-22/ Class 0.5 as per IEC 61557-12/ ± 0.5%		Class 0.2S as per IEC 62053-22/ Class 0.2 as per IEC 61557-12/ ± 0.2%		
	Reactive Energy	Class 2 as per IEC 62053-23/ Class 1.0 as per IEC 61557-12/ ± 1.0%		Class 2 as per IEC 62053-23/ Class 1.0 as per IEC 61557-12/ ± 1.0%		
	Active Power	Class 0.5 as per IEC 61557-12/ ± 0.5%		Class 0.2 as per IEC 61557-12/ ± 0.2%		
	Apparent Power	Class 0.5 as per IEC 61557-12/ ± 0.5%		Class 0.5 as per IEC 61557-12/ ± 0.5%		
	Reactive Power	Class 1.0 as per IEC 61557-12/ ± 1.0%		Class 1.0 as per IEC 61557-12/ ± 1.0%		
	Current, Phase	Class 0.5 as per IEC 61557-12/ ±0.5 %		Class 0.2 as per IEC 61557-12/ ±0.15 %		
	Voltage, L-N	Class 0.5 as per IEC 61557-12/ ± 0.5 %		Class 0.2 as per IEC 61557-12/ ± 0.1 %		
	Frequency	Class 0.05 as per IEC 61557-12/ ±0.05 %		Class 0.05 as per IEC 61557-12/ ±0.05 %		
	Power Factor	Class 0.5 as per IEC 61557-12/ ±0.005 count		Class 0.5 as per IEC 61557-12/ ±0.005 count		
	Voltage unbalance	Class 5/ ±5%		Class 2/ ±2%		
	Voltage harmonics	Class 5/ ±5%		Class 2/ ±2%		
	Voltage THD Class	Class 5/ ±5%		Class 2/ ±2%		
	Current harmonics	Class 5/ ±5%		Class 2/ ±2%		
	Current THD Class	Class 5/ ±5%		Class 2/ ±2%		
	MID Directive EN50470-1, EN50470-3	Annex B and Annex D (Optional model references) Class C				
Input-voltage (up to 1.0 MV AC max, with voltage transformer)	Nominal Measured Voltage range	20 V L-N / 35 V L-L to 400 V L-N /690 V L-L absolute range 35 V L-L to 760 V L-L		20 V L-N / 20 V L-L to 400 V L-N /690 V L-L absolute range 20 V L-L to 828 V L-L		
	Impedance	5 MΩ				
	Frequency nominal	50 or 60 Hz ±5 %		50 or 60 Hz ±10 %		
Input-current (configurable for 1 or 5 A secondary CTs)	I nominal	5 A				–
	Measured Amps with over range	Starting current: 5 mA Operating range: 50 mA to 8.5 A		Starting current: 5 mA Operating range: 50 mA to 10 A (with Crest Factor)		
	Withstand	Continuous 20 A, 10 s/hr 50 A, 1 s/hr 500 A				
	Impedance	< 0.3 mΩ				
	Frequency nominal	50 or 60 Hz ±5 %		50 or 60 Hz ±10 %		
	Burden	<0.026 VA at 8.5 A				
AC control power	Operating range	100 - 277 V AC L-N / 415 V L-L +/-10 % CAT III 300V class per IEC 61010		100-480 V AC ±10 % CAT III 600V class per IEC 61010		
	Burden	<5 W,11 VA at 415V L-L		<5W/16.0 VA at 480 V AC		
	Frequency	45 to 65 Hz				
	Ride through time at maximum burden	80 mS typical at 120V AC 100 mS typical at 230 V AC 100 mS typical at 415 V AC		35 ms typical at 120 V L-N 129 ms typical at 230 V L-N		
DC control power	Operating range	125–250 V DC ±20 % (100 to 300 V DC)				
	Burden	<4 W at 250 V DC		typical 3.1 W at 125 V DC, max. 5 W		
	Ride-through time	50 mS typical at 125 V DC and maximum burden				
LV DC control power	20-60 V DC ±10 % CAT III Burden 4.1 W max.	–	–	■ PM5580	–	–

PM5000 series

PM5000 technical specifications

			PM5100	PM5300	PM5500	PM5600	PM5700
Outputs	Relay outputs	Max output frequency	–	0.5 Hz maximum (1 s ON / 1 s OFF - min times)	–	–	–
		Switching current, at resistive load	–	250 V AC at 8.0 Amps, 25 k cycles 30 V DC at 2.0 Amps, 75 k cycles 30 V DC at 5.0 Amps, 12.5 k cycles	–	–	–
		Isolation	–	2.5 kV rms	–	–	–
	Digital outputs	Max load voltage	40 V DC		40 V AC / 60 V DC (PM5500 and PM 5650) 30 V AC / 40 V DC (PM5660, PM5661, PM5760, PM5761)		
		Max load current	20 mA		125 mA (Solid state)		
		On Resistance	50 Ω max		8 Ω		
		Meter constant	from 1 to 9,999,999 pulses per k_h (kWh, kVAh, kVARh)				
		Pulse width for Digital Output	50 % duty cycle				
		Pulse frequency for Digital Output	25 Hz max.				
		Leakage current	0.3 micro Amps		1 micro Amps		
		Isolation	5 kV rms		2.5 kV rms for 60 s		
	Optical outputs	Pulse width (LED)	200 ms				
		Pulse frequency	2.5 kHz. max		2.5 kHz. max		
		Meter constant	from 1 to 9,999,999 pulses per k_h (kWh, kVAh, kVARh)				
Status Inputs	ON Voltage		–	18.5 to 36 V DC	15 to 30 V AC / 15 to 60 V DC max		
	OFF Voltage		–	0 to 4 V DC	0 to 6 V AC / 0 to 6 V DC		
	Input Resistance		–	110 k Ω	100 k Ω		
	Maximum Frequency		–	2 Hz (T ON min = T OFF min = 250 ms)	25 Hz (T ON min = T OFF min = 20 ms)		
	Response Time		–	20 ms	10 ms		
	Opto Isolation		–	5 kV rms	2.5 kV rms for 60 s		
	Whetting output		–	24 V DC/ 8 mA max	-		
	Input Burden		–	2 mA @24V DC	2 mA @ 24 V AC/DC 2.5 mA @ 60 V AC/DC		
Analog inputs (PM5570)			–		4 - 20 mA DC (nominal), Accuracy: 1% of full-scale reading, Impedance < 20 Ω, Operating voltage: 24 V DC max	–	
Residual Current inputs (PM5660, PM5661, PM5760, PM5761) Type A as per IEC 62020			–			5 uA to 1200 uA (nominal), 1500 uA max (continuous), Input type: AC 45 to 65 Hz, Burden: 150 Ω, Default toroid: 1000 turns	
Mechanical characteristics							
Product weight			380 g	430 g	450 g	450 g	450 g
IP degree of protection (IEC 60529)			IP54 front display, IP30 rear side (IP65 front side with Optional accessory kit METSEIP65OP96X96FF)				
Dimensions W x H x D [protrusion from cabinet]			96 x 96 x 72 mm (77 mm for PM5500) (depth of meter from housing mounting flange) [13 mm]				
Mounting position			Vertical				
Panel thickness			6 mm maximum				
LVCT (+8) inputs for PM5310R and PM5320R - Nominal voltage of 0.333V							
Measurement range			-	0.00333V - 0.4V	-	-	-

(+8) PM5310R and PM5320R must be used with Schneider Electric's "Quick Click" 3-in-1 LVCTs

PM5000 series

PM5000 technical specifications

		PM5100	PM5300	PM5500	PM5600	PM5700
Environmental characteristics						
Operating temperature	Operating temperature	-25 °C to 70 °C				
	Display (reduced display performance at -25 ° C)	-25 °C to 70 °C				
Storage temperature		-40 °C to 85 °C				
Humidity range		5 to 95 % RH at 50 °C (non-condensing)				
Pollution degree		2				
Altitude		2000 m CAT III / 3000 m CAT II		3000 m max. CAT III		
Mission profile / Life span		>15 years				
Protective treatment		Conformal coating				
Electromagnetic compatibility						
Harmonic current emissions		–	–	IEC 61000-3-2		
Flicker emissions		–	–	IEC 61000-3-3		
Electrostatic discharge		IEC 61000-4-2				
Immunity to radiated fields		IEC 61000-4-3				
Immunity to fast transients		IEC 61000-4-4				
Immunity to surge		IEC 61000-4-5				
Conducted immunity 150 kHz to 80 MHz		IEC 61000-4-6				
Immunity to magnetic fields		IEC 61000-4-8				
Immunity to voltage dips		IEC 61000-4-11				
Immunity to damped oscillatory waves		–	–	IEC 61000-4-12		
Radiated and conducted emissions		FCC part 15, EN 55022 Class B				
Safety						
Europe		CE, as per IEC 61010-1 Ed. 3, IEC 62052-11 & IEC 61557-12				
U.S. and Canada		cULus as per UL 61010-1 (Edition 3)				
Measurement category (Voltage & Current inputs)		CAT III up to 400 V L-N / 690 V L-L				
Dielectric		As per IEC/UL 61010-1 (Edition 3)				
Protective Class		II, Double insulated for user accessible parts				
Communication						
RS-485 port Modbus RTU, Modbus ASCII (7 or 8 bit), JBUS		2-Wire, 9600,19200 or 38400 baud, Parity - Even, Odd, None, 1 stop bit if parity Odd or Even, 2 stop bits if None; (Optional in PM51x and PM53x)				
Ethernet port: 10/100 Mbps; Modbus TCP/IP		–	1 Optional	2 (daisy chain only, 1 IP address)		
Native Ethernet/IP & DNP3.0 over Ethernet		–	–	Yes	Yes	Yes
FTP / FTPS		–	–	Yes	Yes	Yes
SNMP, SNTP, SMTP		–	–	Yes	Yes	Yes
HTTPS		–	–	Yes	Yes	Yes
Firmware and language file update		Meter firmware update via the communication ports				
Isolation		2.5 kVrms, double insulated				
Human machine interface						
Display type		Monochrome Graphics LCD				
Resolution		128 x 128 pixels				
Backlight		White LED				
Viewable area (W x H)		67 x 62.5 mm				
Keypad		4-button				
Indicator Heartbeat / Communication activity		Green LED				
Energy pulse output / Active alarm (configurable)		Optical, amber LED				
Wavelength		590 to 635 nm				
Maximum pulse rate		2.5 kHz				

PM5000 series

Comm. ref numbers	Description
METSEPM5100	Power Meter, 600V AC L-L/ 5A or 1A input, 415V AC L-L or 250V DC control power, Cl 0.5S, 15th harmonic, 1DO
METSEPM5110	Power Meter, 600V AC L-L/ 5A or 1A input, 415V AC L-L or 250V DC control power, Cl 0.5S, 15th harmonic, 1DO, RS-485
METSEPM5111	Power Meter, 600V AC L-L/ 5A or 1A input, 415V AC L-L or 250V DC control power, Cl 0.5S, 15th harmonic, 1DO, RS-485, MID
METSEPM5310	Power Meter, 600V AC L-L/ 5A or 1A input, 415V AC L-L or 250V DC control power, Cl 0.5S, 31st harmonic, 256 kB, 2DI/2DO, RS-485
METSEPM5310R	Power Meter, 600V AC L-L/ RJ45 LVCT input, 415V AC L-L or 250V DC control power, Cl 0.5S, 31st harmonic, 256 kB, 2DI/2DO, RS-485
METSEPM5320	Power Meter, 600V AC L-L/ 5A or 1A input, 415V AC L-L or 250V DC control power, Cl 0.5S, 31st harmonic, 256 kB, 2DI/2DO, Ethernet
METSEPM5320R	Power Meter, 600V AC L-L/ RJ45 LVCT input, 415V AC L-L or 250V DC control power, Cl 0.5S, 31st harmonic, 256 kB, 2DI/2DO, Ethernet
METSEPM5330	Power Meter, 600V AC L-L/ 5A or 1A input, 415V AC L-L or 250V DC control power, Cl 0.5S, 31st harmonic, 256 kB, 2DI/2DO/2-Relay, RS-485
METSEPM5331	Power Meter, 600V AC L-L/ 5A or 1A input, 415V AC L-L or 250V DC control power, Cl 0.5S, 31st harmonic, 256 kB, 2DI/2DO/2-Relay, RS-485, MID
METSEPM5340	Power Meter, 600V AC L-L/ 5A or 1A input, 415V AC L-L or 250V DC control power, Cl 0.5S, 31st harmonic, 256 kB, 2DI/2DO/2-Relay, Ethernet
METSEPM5341	Power Meter, 600V AC L-L/ 5A or 1A input, 415V AC L-L or 250V DC control power, Cl 0.5S, 31st harmonic, 256 kB, 2DI/2DO/2-Relay, Ethernet, MID
METSEPM5560	Power Meter, 690V AC L-L/ 5A or 1A input, 480V AC L-L or 250V DC control power, Cl 0.2S, 63rd harmonic, 1.1 MB, 4DI/2-DO, RS-485, Ethernet
METSEPM5561	Power Meter, 690V AC L-L/ 5A or 1A input, 480V AC L-L or 250V DC control power, Cl 0.2S, 63rd harmonic, 1.1 MB, 4DI/2-DO, RS-485, Ethernet, MID
METSEPM5562	Power Meter, 690V AC L-L/ 5A or 1A input, 480V AC L-L or 250V DC control power, Cl 0.2S, 63rd harmonic, 1.1 MB, 4DI/2-DO, RS-485, Ethernet, RMI CAN approved, Hardware lockable
METSEPM5562MC	Power Meter, 690V AC L-L/ 5A or 1A input, 480V AC L-L or 250V DC control power, Cl 0.2S, 63rd harmonic, 1.1 MB, 4DI/2-DO, RS-485, Ethernet, RMI CAN approved, Factory sealed
METSEPM5563	Power Meter, 690V AC L-L/ 5A or 1A input, 480V AC L-L or 250V DC control power, Cl 0.2S, 63rd harmonic, 1.1 MB, 4DI/2-DO, RS-485, Ethernet, DIN mount, No display
METSEPM5563RD	Power Meter, 690V AC L-L/ 5A or 1A input, 480V AC L-L or 250V DC control power, Cl 0.2S, 63rd harmonic, 1.1 MB, 4DI/2-DO, RS-485, Ethernet, DIN mount, Remote display
METSEPM5570	Power Meter, 690V AC L-L/ 5A or 1A input, 480V AC L-L or 250V DC control power, Cl 0.2S, 63rd harmonic, 1.1 MB, 2DI/2AI/2-DO, RS-485, Ethernet
METSEPM5580	Power Meter, 690V AC L-L/ 5A or 1A input, 24 to 64V DC control power, Cl 0.2S, 63rd harmonic, 1.1 MB, 4DI/2-DO, RS-485, Ethernet
METSEPM5650	Power Meter, 690V AC L-L/ 5A or 1A input, 480V AC L-L or 250V DC control power, Cl 0.2S, 63rd harmonic, 1.1 MB, 4DI/2-DO, RS-485, Ethernet, Wave Form Capture and Sag/swell
METSEPM5660	Power Meter, 690V AC L-L/ 5A or 1A input, 480V AC L-L or 250V DC control power, Cl 0.2S, 63rd harmonic, 1.1 MB, 2DI/2-DO, RS-485, Ethernet, Residual Current Monitor
METSEPM5661	Power Meter, 690V AC L-L/ 5A or 1A input, 480V AC L-L or 250V DC control power, Cl 0.2S, 63rd harmonic, 1.1 MB, 2DI/2-DO, RS-485, Ethernet, Residual Current Monitor, MID
METSEPM5760	Power Meter, 690V AC L-L/ 5A or 1A input, 480V AC L-L or 250V DC control power, Cl 0.2S, 63rd harmonic, 1.1 MB, 2DI/2-DO, RS-485, Ethernet, Wave Form Capture and Sag/swell, Residual current monitor
METSEPM5761	Power Meter, 690V AC L-L/ 5A or 1A input, 480V AC L-L or 250V DC control power, Cl 0.2S, 63rd harmonic, 1.1 MB, 2DI/2-DO, RS-485, Ethernet, Wave Form Capture and Sag/swell, Residual current monitor, MID

For selection of compatible current transformers with 5 A output in Schneider range: Refer **PLSED310169EN** in solid core and split core IEC type

For Residual Current Monitoring Toroids (Vigirex) - Closed Toroids, A Type (applicable for PM5660, PM5661, PM5760, PM5761)	
50437	TA30 - closed toroid A type, for RCM enabled power meters, 30 mm inner diameter, rated current 65 Amps, 1000 turns
50438	PA50 - closed toroid A type, for RCM enabled power meters, 50 mm inner diameter, rated current 85 Amps, 1000 turns
50439	IA80 - closed toroid A type, for RCM enabled power meters, 80 mm inner diameter, rated current 160 Amps, 1000 turns
50440	MA120 - closed toroid A type, for RCM enabled power meters, 120 mm inner diameter, rated current 250 Amps, 1000 turns
50441	SA200 - closed toroid A type, for RCM enabled power meters, 200 mm inner diameter, rated current 400 Amps, 1000 turns
50442	GA300 - closed toroid A type, for RCM enabled power meters, 300 mm inner diameter, rated current 630 Amps, 1000 turns
Accessories for Closed Toroids (applicable for PM5660, PM5661, PM5760, PM5761)	
56055	Magnetic ring/ Iron screen accessory for TA30 toroid sensor
56056	Magnetic ring/ Iron screen accessory for PA50 toroid sensor
56057	Magnetic ring/ Iron screen accessory for IA80 toroid sensor
56058	Magnetic ring/ Iron screen accessory for MA120 toroid sensor
Residual Current Monitoring Toroids (Vigirex) - Split Toroids, OA Type (applicable for PM5660, PM5661, PM5760, PM5761)	
50420	TOA80 - split toroid OA type, 80 mm inner diameter, rated current 160 Amps, 1000 turns
50421	TOA120 - split toroid OA type, 120 mm inner diameter, rated current 250 Amps, 1000 turns
56053	L1 type - rectangular sensor, width 280 x height 115 mm, rated current 1600 Amps, 1000 turns
56054	L2 type - rectangular sensor, width 470 x height 160 mm, rated current 3200 Amps, 1000 turns

Current Transformer commercial reference numbers for PM53xxR

Comm. ref numbers	Description
0.333V (1/3 Volts), 3-in-1 CTs with RJ45 connectors for PM53x0R LVCT enabled power meter	
METSECTV25006	LVCT Solid core 3 in 1 with RJ45 cable, 25 mm phase center, 60 Amps, 0.333V output
METSECTV25010	LVCT Solid core 3 in 1 with RJ45 cable, 25 mm phase center, 100 Amps, 0.333V output
METSECTV25013	LVCT Solid core 3 in 1 with RJ45 cable, 25 mm phase center, 125 Amps, 0.333V output
METSECTV25016	LVCT Solid core 3 in 1 with RJ45 cable, 25 mm phase center, 160 Amps, 0.333V output
METSECTV35006	LVCT Solid core 3 in 1 with RJ45 cable, 35 mm phase center, 60 Amps, 0.333V output
METSECTV35010	LVCT Solid core 3 in 1 with RJ45 cable, 35 mm phase center, 100 Amps, 0.333V output
METSECTV35012	LVCT Solid core 3 in 1 with RJ45 cable, 35 mm phase center, 120 Amps, 0.333V output
METSECTV35013	LVCT Solid core 3 in 1 with RJ45 cable, 35 mm phase center, 125 Amps, 0.333V output
METSECTV35015	LVCT Solid core 3 in 1 with RJ45 cable, 35 mm phase center, 150 Amps, 0.333V output
METSECTV35016	LVCT Solid core 3 in 1 with RJ45 cable, 35 mm phase center, 160 Amps, 0.333V output
METSECTV35020	LVCT Solid core 3 in 1 with RJ45 cable, 35 mm phase center, 200 Amps, 0.333V output
METSECTV35025	LVCT Solid core 3 in 1 with RJ45 cable, 35 mm phase center, 250 Amps, 0.333V output
METSECTV45025	LVCT Solid core 3 in 1 with RJ45 cable, 45 mm phase center, 250 Amps, 0.333V output
METSECTV45030	LVCT Solid core 3 in 1 with RJ45 cable, 45 mm phase center, 300 Amps, 0.333V output
METSECTV45040	LVCT Solid core 3 in 1 with RJ45 cable, 45 mm phase center, 400 Amps, 0.333V output
METSECTV45050	LVCT Solid core 3 in 1 with RJ45 cable, 45 mm phase center, 500 Amps, 0.333V output
METSECTV45060	LVCT Solid core 3 in 1 with RJ45 cable, 45 mm phase center, 600 Amps, 0.333V output
METSECTV45063	LVCT Solid core 3 in 1 with RJ45 cable, 45 mm phase center, 630 Amps, 0.333V output
METSECTV29006	LVCT Solid core 3 in 1 with RJ45 cable, 29 mm phase center, 60 Amps, 0.333V output
METSECTV29010	LVCT Solid core 3 in 1 with RJ45 cable, 29 mm phase center, 100 Amps, 0.333V output
METSECTV29012	LVCT Solid core 3 in 1 with RJ45 cable, 29 mm phase center, 120 Amps, 0.333V output
METSECTV29013	LVCT Solid core 3 in 1 with RJ45 cable, 29 mm phase center, 125 Amps, 0.333V output
METSECTV29015	LVCT Solid core 3 in 1 with RJ45 cable, 29 mm phase center, 150 Amps, 0.333V output
METSECTV29016	LVCT Solid core 3 in 1 with RJ45 cable, 29 mm phase center, 160 Amps, 0.333V output
METSECTV29020	LVCT Solid core 3 in 1 with RJ45 cable, 29 mm phase center, 200 Amps, 0.333V output
METSECTV70080	LVCT Solid core 3 in 1 with RJ45 cable, 70 mm phase center, 800 Amps, 0.333V output
METSECTV70100	LVCT Solid core 3 in 1 with RJ45 cable, 70 mm phase center, 1000 Amps, 0.333V output
METSECTV70125	LVCT Solid core 3 in 1 with RJ45 cable, 70 mm phase center, 1250 Amps, 0.333V output
Cables for PM5563 and PM5563RD	
METSEPM5CAB03	RJ25 cable assembly for interfacing PM5563 meter and PM5RD remote display with 0.3 meter cable length
METSEPM5CAB1	RJ25 cable assembly for interfacing PM5563 meter and PM5RD remote display with 1.0 meter cable length
METSEPM5CAB10	RJ25 cable assembly for interfacing PM5563 meter and PM5RD remote display with 10 meter cable length
METSEPM5CAB3	RJ25 cable assembly for interfacing PM5563 meter and PM5RD remote display with 3 meter cable length
METSEPM5CAB4	RJ25 cable assembly for interfacing PM5563 meter and PM5RD remote display with 4 meter cable length
Other related products or accessories	
METSEPM5RD	Remote display unit for PM5563 power meter supplied with mounting bracket, gasket, anti-rotation pin and RJ25 cable METSEPMCABxy
METSEPM51HK	Hardware kit for PM51xx comprises 2 retainer clips and spare connectors for - Voltage in, Control power in, Digital IO & RS-485
METSEPM53HK	Hardware kit for PM51xx comprises 2 retainer clips and spare connectors for - Voltage in, Control power in, Digital IO, Relay & RS-485
METSEPM51_3RSK	Revenue sealing kit for PM51XX & PM53XX
METSEPM55RSK	Revenue sealing kit for PM55XX
METSEPM55HK	Hardware kit for PM55xx

Please contact your Schneider Electric representative for complete ordering information.

PM5000 series

PM5100/PM5300 Series meter mounting

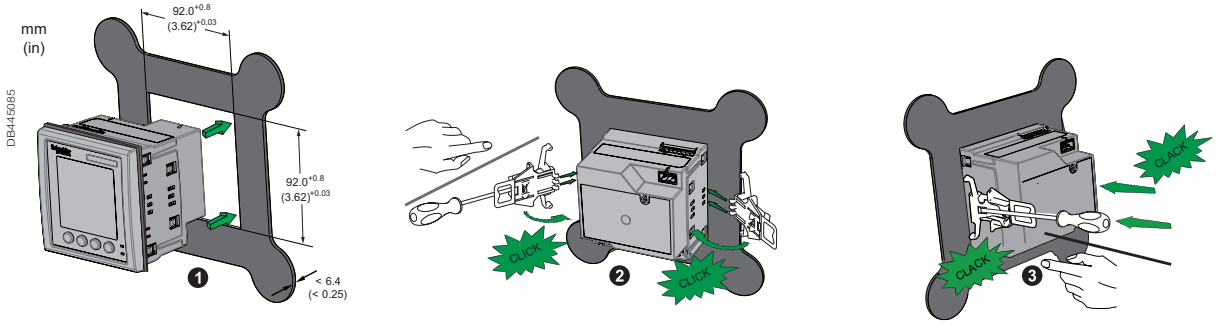

PM5500/PM5600/PM5700 series meter mounting

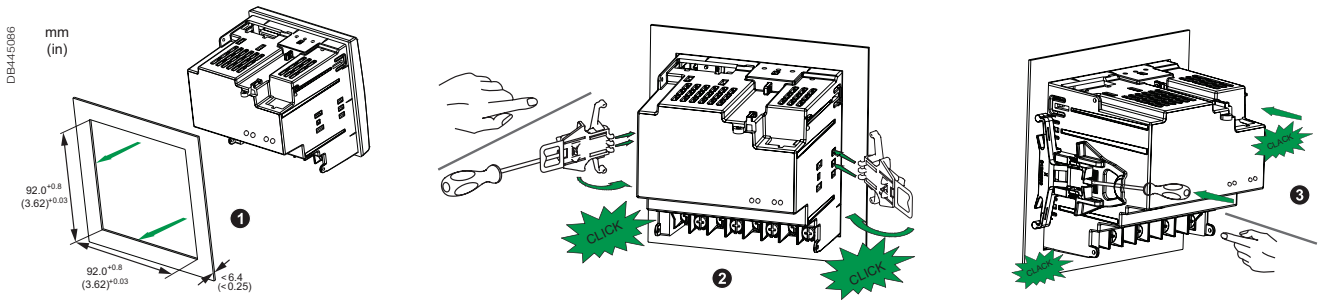

PM5000 series meter dimensions

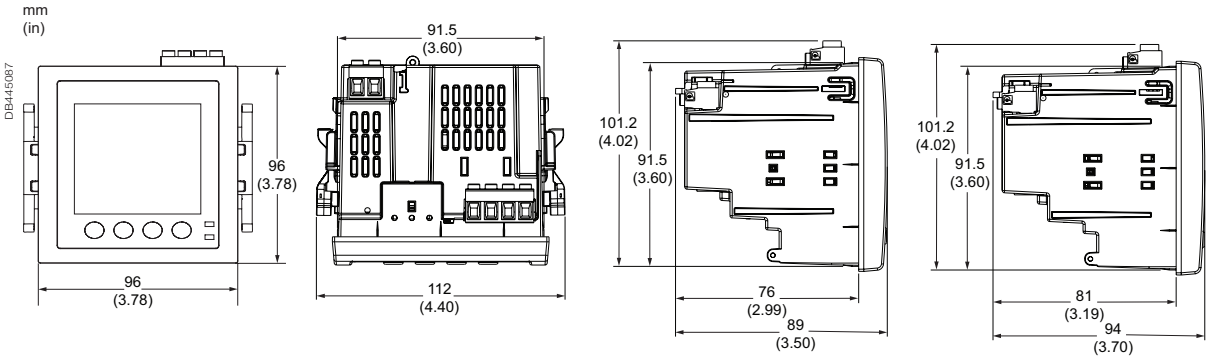

PM5100/PM5300 PM5500/PM5600/PM5700

PM5000 series overview

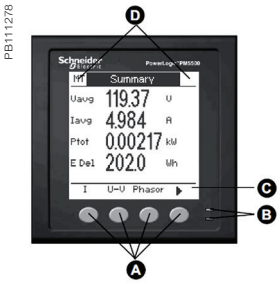

PM5000 meter parts

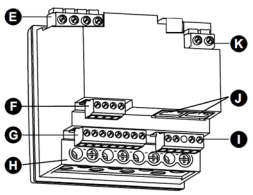

PM5500/PM5600/PM5700 meter parts

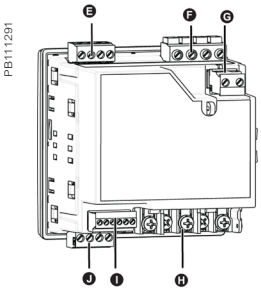

PM5100/PM5300 meter parts

- **A** Menu selection buttons
- **B** LED indicators
- **C** Navigation or menu selections
- **D** Maintenance and alarm notification area

- **E** Voltage inputs
- **F** RS-485 comms
- **G** Digital inputs
- **H** Current inputs
- **I** Digital outputs
- **J** Ethernet ports
- **K** Control power

- **E** Relay output (PM5300 only)
- **F** Voltage inputs
- **G** Control power
- **H** Current inputs
- **I** Status inputs/digital outputs
- **J** Communications port: Ethernet (PM5300 only) or RS-485)

*Please see the appropriate **Installation Guide** for accurate and complete information on the installation of this product.*

PowerLogic™ PM5350 series

The PowerLogic™ PM5350 series power meters are the new benchmark in affordable, precision metering.

The PowerLogic™ PM5350, PM5350IB, PM5350PB, and PM5350P power meters offer all the measurement capabilities required to monitor an electrical installation in a space-efficient, single 96 x 96 mm unit with small depth. DNC certifies for marine applications.

Applications

- Panel instrumentation.
- Cost allocation or energy management
- Electrical installation remote monitoring
- Sophisticated alarming
- Circuit beaker monitoring and control

PB117510

METSEPM5350P

The solution for

Markets that can benefit from a solution that includes PowerLogic™ PM5350 series meters:

- Buildings
- Industry
- Healthcare
- Data Centre and networks
- Infrastructure

Benefits

System integrators' benefit

- Ease of integration
- Ease of setup
- Cost effectiveness

Panel builders' benefit

- Ease of installation
- Cost effectiveness
- Aesthetically pleasing
- Simplified ordering

End users' benefit

- Ease of use
- Precision metering & sub-billing
- Billing flexibility
- Comprehensive, consistent and superior performance

Competitive advantages

- Easy to install and operate
- Easy for circuit breaker monitoring and control
- Power quality analysis
- Load management combined with alarm and timestamping
- High performance and accuracy
- Multi-tariff capabilities
- Individual harmonics up to 31st

Power management solutions

Schneider Electric provides innovative power management solutions to increase your energy efficiency and cost savings, maximise electrical network reliability and availability, and optimise electrical asset performance.

Conformity of standards

- IEC 62053-22
- IEC 61557-12
- IEC 62053-23
- IEC/UL 61010-1
- IEC 61326-1
- UL 61010-1
- IEC 61000-3-3
- FCC part 15 Class A
- DNV GL certified

PM5350 series

PB117511

Front display of PowerLogic™ PM5350P front display

PB117512

Rear view of PowerLogic™ PM5350P

Commercial reference number	Description
METSEPM5350	RS-485 Modbus, THD, 4DI, 2Relay
METSEPM5350IB	RS-485, 4DI/2Relay, Multi-level alarm, UL480V, 4DI/2Relay
METSEPM5350PB	RS-485, 4DI/2Relay, Multi-level alarm, UL300V, 4DI/2Relay
METSEPM5350P	RS-485 Modbus, THD, 31st Individual harmonics, Multi-tariff, 4DI/2Relay

The PowerLogic™ PM5350 series power meters offer electrical installation measurement capabilities in a single 96 x 96 mm unit. Three-phases and neutral can be monitored simultaneously using a bright, anti-glare display with large characters and backlighting. Menus are intuitive and the meter supports English, Chinese, Hebrew, and Spanish languages. Its compact size and high performance make the PowerLogic™ PM5350 series suitable for many applications.

- Applications
  - Panel instrumentation.
  - Cost allocation or energy management.
  - Electrical installation remote monitoring.
  - Alarming with under/over, digital status, control power interruption, meter reset, self diagnostic issue.
  - Circuit Breaker monitoring and control with relay outputs and whetted digital inputs.
- Main characteristics
  - Easy to install
    - Mounts using two clips, no tools required. Ultra compact meter with 44 mm depth connectable up to 480 V L-L without voltage transformers for installations compliant with category III, as per IEC 61010-1. See specification table for UL voltage limits.
  - Easy to operate
    - Intuitive navigation with self-guided, language selectable menus, six lines, four concurrent values. Two LEDs help confirm normal operation.
  - Easy circuit breaker monitoring and control
    - Two relay outputs (high performance) to command most circuit breaker coils directly. Monitored switches can be wired directly without external power supply.
  - System status at a glance
    - Bright, anti-glare, backlit display plus two LEDs; orange for energy pulse or alarm and green for heartbeat/communications indication.
  - IEC 62053-22 class 0.5S accuracy for active energy
    - Accurate energy measurement for cost allocation.
  - Power Quality analysis
    - The PM5350P offers THD and TDD measurements as standard. Total Demand Distortion is based on a point of common coupling (PCC), which is a common point that each user receives power from the power source. The TDD compares the contribution of harmonics versus the maximum demand load. In addition, it has individual harmonics (odd) measurement up to 31st harmonics. These types of power quality parameters help to identify the source of harmonics that can harm transformers, capacitors, generators, motors and electronic equipment.
- Load management
  - Peak demands with Timestamping are provided. Predicted demand values can be used in basic load shedding applications.
    Alarming with timestamping
  - Over 30 alarm conditions, such as under/over conditions, digital input changes, and phase unbalance inform you of events. A time-stamped log maintains a record of the last 40 alarm events.
  - Load timer setpoint adjustable to monitor and advise maintenance requirements.
  - Performance Standard Meets IEC 61557-12 PMD/Sx/K70/0.5.

PM5350 series

Feature guide		PM5350P	PM5350	PM5350IB	PM5350PB
General					
Use on LV and MV systems		■			
Basic metering with THD and min/max readings		■			
Instantaneous rms values					
Current	Total, Phases and neutral	■			
Voltage	Total, Ph-Ph and Ph-N	■			
Frequency		■			
Real, reactive, and apparent power	Total and per phase	Signed			
True Power Factor	Total and per phase	Signed, Four Quadrant			
Displacement PF	Total and per phase	Signed, Four Quadrant			
Unbalanced I, VL-N, VL-L		■			
Accumulated Active, Reactive and Apparent Energy Stored in non-volatile memory		Received/Delivered; Net and absolute;			
Demand values					
Current average	Present, Last, Predicted, Peak, & Peak Date Time	■			
Active power	Present, Last, Predicted, Peak, & Peak Date Time	■			
Reactive power	Present, Last, Predicted, Peak, & Peak Date Time	■			
Apparent power	Present, Last, Predicted, Peak, & Peak Date Time	■			
Multi-tariff		16 tariffs			
Peak demand with timestamping D/T for current & powers		■			
Demand calculation	Sliding, fixed and rolling block, thermal	■			
Synchronization of the measurement window		■			
Other measurements					
I/O timer		■			
Operating timer		■			
Active load timer		■			
Alarm counters		■			
Power quality measurements					
THD, thd (Total Harmonic Distortion)		I, V L-N, V L-L			
TDD, thd (Total Demand Distortion)		■			
Harmonics Individual (Odd)		31st			
Data recording					
Min/max of instantaneous values, plus phase identification		■			
Alarms with 1s timestamping		Standard 29; Unary 4; Digital 4			
Alarms stored in non-volatile memory		40 events			
Inputs/Outputs					
Digital inputs		4 (DI1, DI2, DI3, DI4)			
Digital outputs		2 relay outputs (DO1, DO2)			
Display					
White backlit LCD display, 6 lines, 4 concurrent values		■			
IEC or IEEE visualization mode		■			
Communication					
Modbus RTU, Modbus ASCII, Jbus Protocol		■			
Firmware update via RS-485 serial port (DLF3000 via the Schneider Electric website: x)		■			

xx

PM5350 series

Electrical characteristics			PM5350	PM5350P	PM5350PB/IB
Type of measurement		True rms measurement in 1P, 2P, 3P network, supports 13 wiring schemes. 32 samples per cycle, zero blind	■	31st	■
Measurement accuracy	Current, Phase(1)	±0.30 %	■	0.2% (Avg A)	■
	Voltage, L-N (1)	±0.30 %	■	0.2% (Avg A)	■
	Power Factor (1)	±0.005	■		
	Power, Phase(2)	IEC 61557-12 Class 0.5; For 5 A nominal CT	■		
	Frequency (1)	±0.05 %	■		
	Real Energy(3)	IEC 62053-22 Class 0.5S IEC 61557-12 Class 0.5	■		
	Reactive Energy(4)	IEC 62053-23 Class 2 IEC 61557-12 Class 2	■		
Data update rate		1 second nominal (50/60 cycles)	■		
Input-voltage	VT primary	1.0 MV AC max, starting voltage depends on VT ratio	■		
	U nom	277 V L-N	■		
	Measured voltage with overrange & Crest Factor	IEC: 20 to 480 V AC L-L; 20 to 277 V AC L-N, CAT III IEC: 20 to 690 V AC L-L; 20 to 400 V AC L-N, CAT II UL: 20 to 300 V AC L-L, CAT III	■		■ and UL: 20 to 480 V AC L-L
	Permanent overload	700 V AC L-L, 404 V AC L-N	■		
	Impedance	10 MΩ	■		
	Burden	0.2 VA at 240 V AC L-N	■		
	Frequency range	45 to 70 Hz	■	45 to 65 Hz	■
Input-current	CT ratings Secondary	1 A, 5 A nominal	■		
	Measured voltage with overrange & crest factor	5 mA to 9 A	■		
	Withstand	Continuous 20 A,10 sec/hr 50 A,1 sec/hr 500 A	■		
	Impedance	< 0.3 mΩ	■		
	Frequency range	45 to 70 Hz	■		
	Burden	< 0.024 VA at 9 A	■		
AC control power	Operating range	85 - 265 V AC	■		
	Burden	At 120 V AC, 4.1 VA/ 1.5 W typical At 230 V AC, 6.3 VA/ 2.0 W typical At 265 V AC, 9.6 VA/ 3.5 W typical	6.7 VA / 2.7 W 8.6 VA / 2.9 W 11.9 VA / 3.5 W	7 VA / 4 W 9 VA / 5 W 11.9 VA / 5 W	6.7 VA / 2.7 W 8.6 VA / 2.9 W 11.9 VA / 3.5 W
	Frequency	45 to 65 Hz	■		
	Ride-through time	Typical at 120 V AC and with maximum burden Typical at 230 V AC and with maximum burden	100 mS 400 mS	40 mS 250 mS	100 mS 400 mS
DC control power	Operating range	100 to 300 V DC	■		
	Burden	Typical/ Maximum at 125 V DC Typical/ Maximum at 250 V DC Typical Maximum at 300 V DC	1.4 W / 2.6 W 1.8 W / 2.7 W 3.8 W max	4 W max 5 W max 5 W max	1.4 W / 2.6 W 1.8 W / 2.7 W 3.8 W max
	Ride-through time	Typical at 125 V DC and with maximum burden	50 mS	30 mS	50 mS
Real time clock	Battery backup	30 seconds ride-through	■	3 years backup without control power	■
Digital output	Number/Type	2 - Mechanical Relays	■		
	Output frequency	0.5 Hz maximum (1 second ON / 1 second OFF - minimum times)	■		
	Switching Current	30 V DC, 5 A 250 V AC, 8 A Cos φ = 1 250 V AC, 6 A Cos φ = 0.4	■		
	Isolation	2.5 kVrms	■		
Status Digital Inputs	Voltage ratings	ON 18.5 to 36 V DC, OFF 0 to 4 V DC	■		
	Input Resistance	110 k Ω	■		
	Maximum Frequency	2 Hz (T ON min = T OFF min = 250 ms)	■		
	Response Time	10 ms	■		
	Isolation	2.5 kVrms	■		
Whetting output	Nominal voltage	24 V DC	■		
	Allowable load	4 mA	■		
	Isolation	2.5 kVrms	■		

(1) Measurements taken from 45 Hz to 65 Hz, 0.5 A to 9 A, 57 V to 347 V & 0.5 ind to 0.5 cap power factor with a sinusoidal wave.
(2) Active power: ±0.5 % from 0.25 A to 9.0 A at Cos φ = 1, ±0.6 % from 0.50 A to 9.0 A at Cos φ = 0.5 (ind or cap)
(3) Real/active Energy: ±0.5 % from 0.25 A to 9.0 A at Cos φ = 1, ±0.6 % from 0.50 A to 9.0 A at Cos φ = 0.5 (ind or cap) IEC 61557-12 Class 0.5
(4) Reactive energy: ±2.0 % from 0.25 A to 9.0 A at Sin φ = 1±2.5 % from 0

PM5350 / PM5350P series

Rear of meter - open

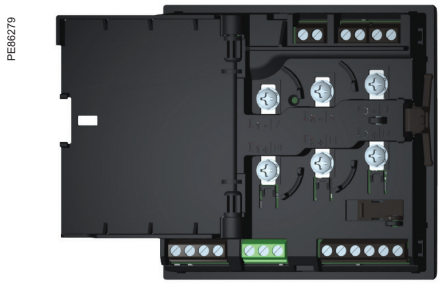

Rear view retainers - installation

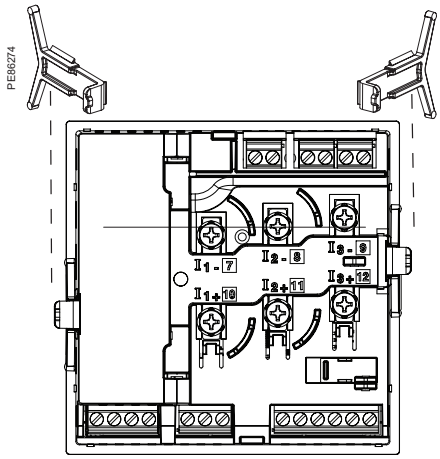

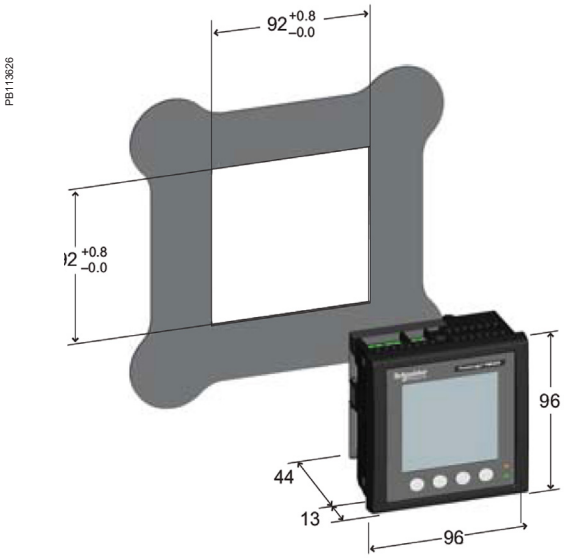

Rear view retainers - users

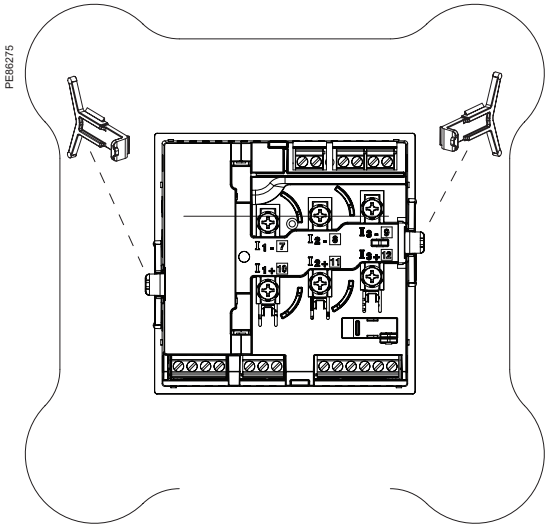

For detailed installation instructions see the product's Installation Guide.

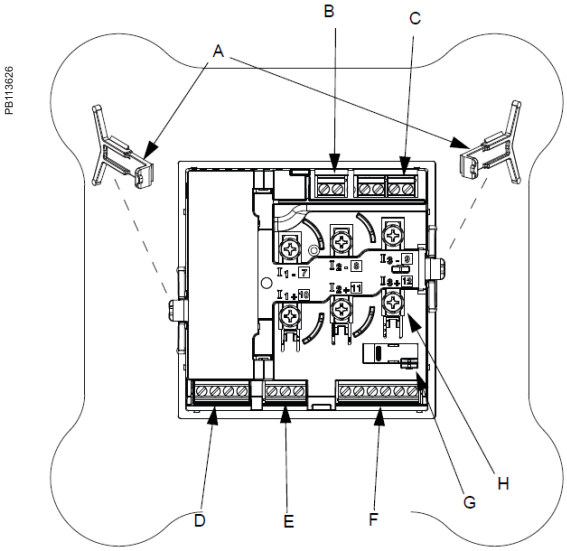

PM5350 / PM5350P meter parts

A Retainer clips.
B Control power supply connector.
C Voltage inputs.
D Digital outputs.
E RS-485 port (COM1).
F Digital input.
G Optical revenue switch.
H Current inputs.

For detailed installation instructions see the product's Installation Guide.

PM5350IB/PB series

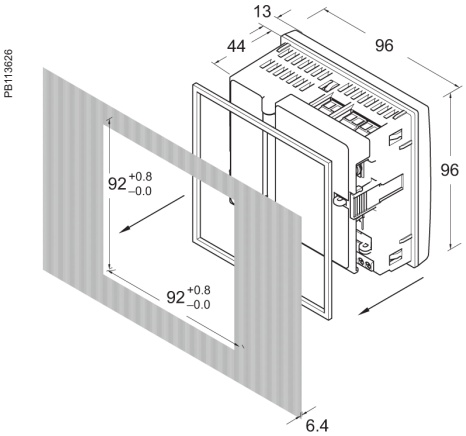

Dimensions PM5350IB

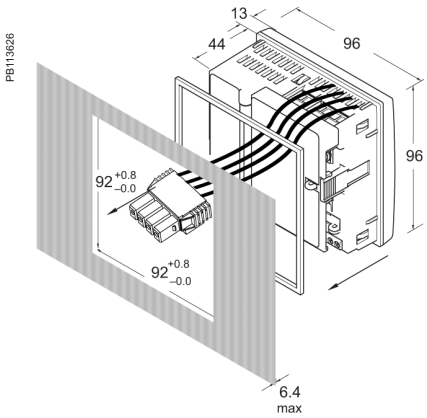

Dimensions PM5350PB

Parts of PM5350IB and PM5350PB (rear panel door removed)

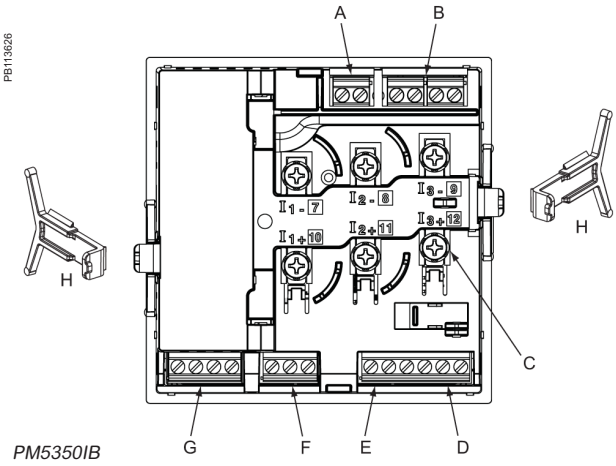

PM5350IB

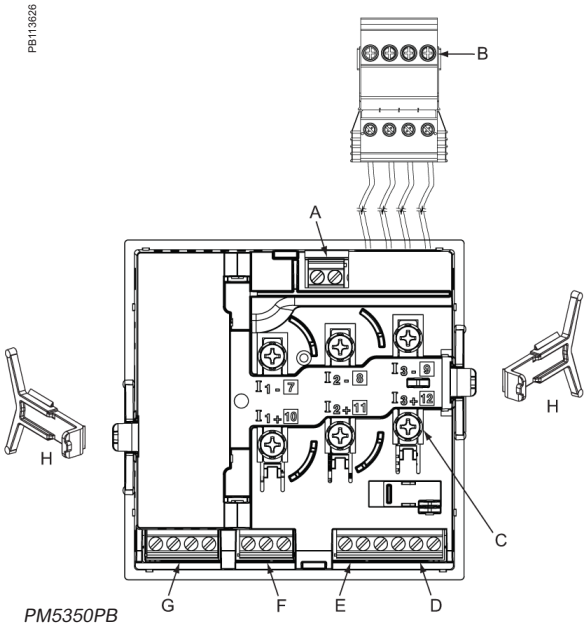

PM5350PB

A Control power
B Voltage inputs
C Current inputs
D Digital inputs
E Whetting voltage source (for digital inputs)
F RS-485 communications
G Digital outputs
H Retainer clips

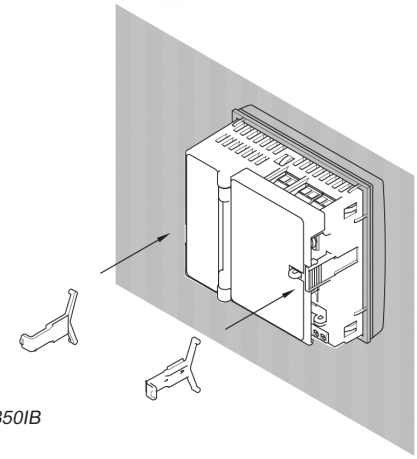

PM5350IB

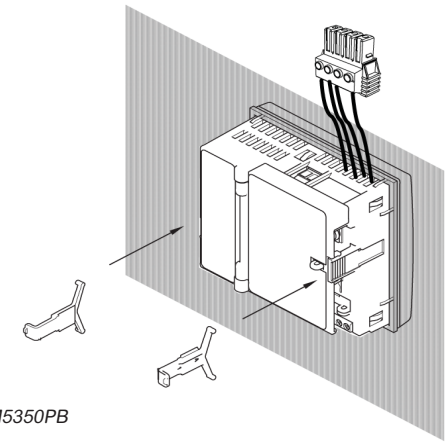

PM5350PB

For detailed installation instructions see the product's Installation Guide.

EcoStruxure™ Panel Server

IoT for an intelligent power network

The EcoStruxure™ Panel Server is the next generation of gateway, providing a seamless connection of wired or unwired smart IoT devices to your edge control software or cloud-based applications and analytics. It is a foundational enabler for Schneider Electric EcoStruxure™ solutions.

Electrical safety

Panel Server is an integral part of Schneider Electric's continuous thermal monitoring application, helping reduce risk of electrical fires, increase people and assets protection. Implement the thermal monitoring of your electrical panel by connecting thermal and heat sensors to your Panel Server.

Power availability

Electrical distribution monitoring and power event analysis help avoid unplanned downtime caused by electrical failure. Panel Server collects real-time data and alarms, presenting information through embedded webpages, making it available to edge control software or cloud-based applications and analytics for electrical system diagnostics. Use embedded webpages for first-level monitoring or monitor from your edge or cloud control system.

Optimize energy efficiency

Improve your facility's energy efficiency and reduce energy consumption with energy usage analysis and performance tracking. Panel Server collects and shares energy data to help achieve your energy conservation initiatives. It is part of an energy data management system certified for compliance with ISO 50001, 50002, 50006 requirements.

Cybersecurity

Guarding your electrical assets and systems against cyber attacks is vital. Discover the enhanced cybersecurity benefits of Panel Server and its IEC62443-4-1 compliant development lifecycle. Explore its cybersecurity features through a dedicated guide, and discover how Panel Server empowers you to retrieve security logs, providing valuable insights into system security and activity.

DB410992

EcoStruxure Panel Server gives you access to the information you need to protect, maximize and optimize your power system.

- Help keep people and assets safer
- Maximize power availability
- Optimize energy efficiency
- Improve cybersecurity

All-in-one gateway

- Separates your OT network from your IT network
- Wireless data concentrator
- Modbus RS485 to Modbus TCP/IP
- Supports multiple Ethernet connections for serving information to edge control software and cloud applications

Simple commissioning

- EcoStruxure™ Power Commission software
- Device auto discovery
- Generation of acceptance reports to validate gateway configuration
- Commission via WiFi

Intuitive operation

- User-friendly webpages offer first-level monitoring
- Contextualized data and operational insights
- Simple alarm setup for email notification
- Standardized IEC 62974-1 compliant datalogger and energy server

Architecture overview

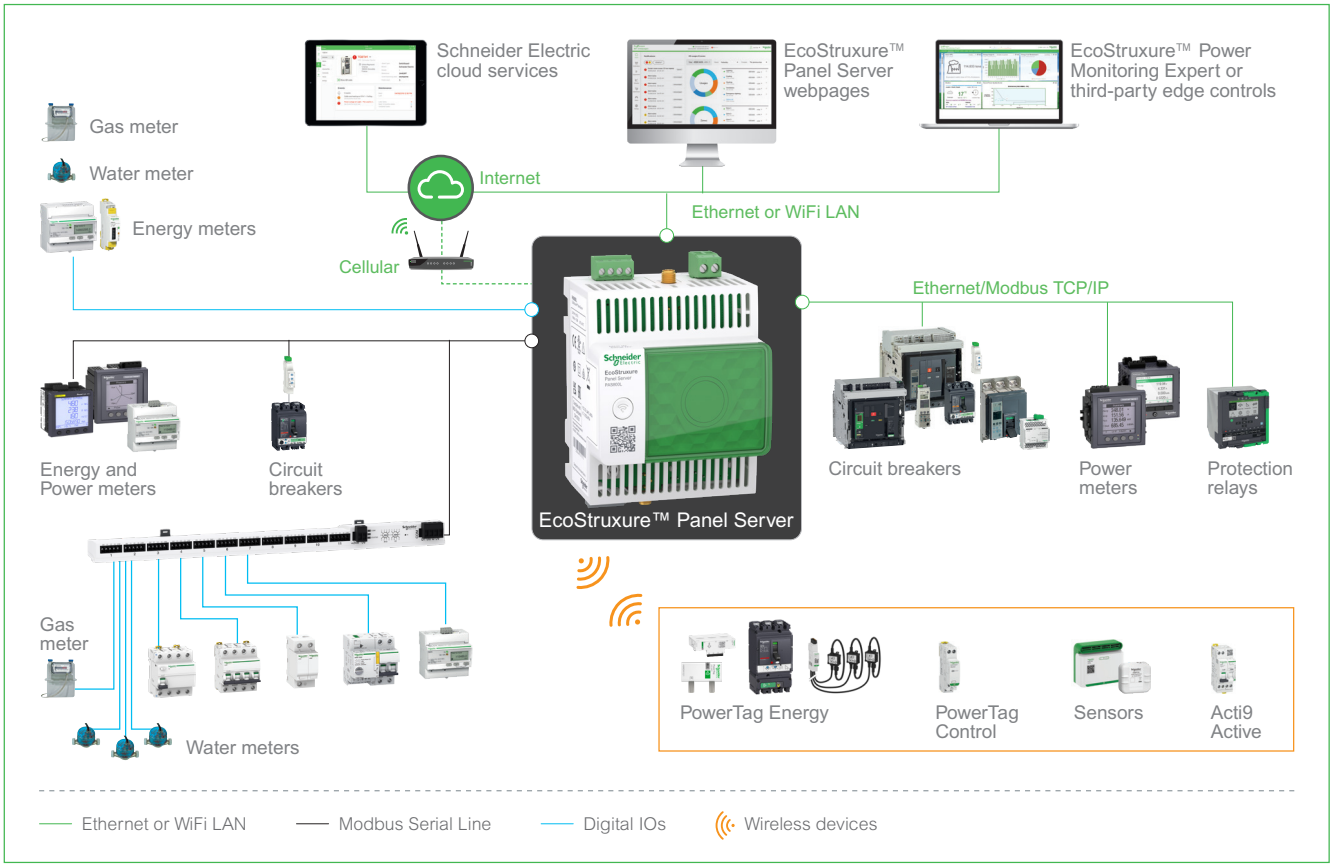

Panel Server Entry

DB410978

Panel Server Entry - Front ISO view

Standards & certifications

- IEC 61010-1
- IEC 61010-2-201
- UL 61010-1
- UL 61010-2-201
- IEC 62974-1
- ETSI EN 301 489-1 V.2.2.3
- ETSI EN 301 489-17 V.3.2.4
- IEC 61326-1
- IEC 62974-1
- EN50581
- EN 62321
- EN 62474
- ETSI EN 300 328 V2.2.2

Compatible with a large set of wireless sensors, PowerTag Energy, Heat Tag, and others. PAS400 is the perfect fit for small networks or installations where space is a challenge.

Functions

- Optimized gateway to retrieve data from your wireless devices.
- Connect to your monitoring and control software such as EcoStruxure™ Power Monitoring Expert, EcoStruxure™ Power Operation or to your Building Management System.
- Connect to Schneider Electric cloud applications such as EcoStruxure™ Energy Hub or Asset Advisor.
- Ease of commissioning with EcoStruxure™ Power Commission software or directly through the Panel Server webpages, enabling device plug-and-play and auto-discovery features.
- Ease of operation with user friendly embedded webpages, and data contextualization for more relevant analytics.

Main features

- Power Supply 110...277 V AC/DC
- Designed to match with electrical switchboard environment (temperature, humidity electromagnetic compatibility)
- One Ethernet 10Base-T/100Base-T port
- Wi-Fi
- IEEE 802.15.4 wireless communication
- Modbus TCP/IP server
- Support of HTTPS, NTP, SNTP, DHCP client with proxy management
- Wireless devices concentrator to Modbus TCP/IP
- Designed through a Secured Development Life Cycle in accordance to IEC 62443-4-1
- Commissioning through EcoStruxure™ Power Commission or through Embedded Web-Pages
- Speed-up commissioning through device list import and configuration export to the monitoring software
- Fully integrated in Cybersecurity Admin Expert tool to facilitate the management of cybersecurity in your electrical network's (Security features such as enabling/disabling communication means).
- Embedded web server for real-time measurement visualization, and power consumption
- Real-time alarm display

Comm. Reference	Description
PAS400	Panel Server Entry 110...277 V AC/DC

Panel Server Entry

Panel Server Entry technical specification

Technical data		EcoStruxure™ Panel Server Entry
Commercial Reference		PAS400
Power Supply		
Voltage		110...277 V AC/DC
Tolerance		± 10%
Frequency		45...65 Hz
Maximum consumption		3 W, 10 VA
Ethernet & Wi-Fi		
Ethernet 10/100base T	Number of Ports	Single RJ45 Port
	PoE 802.3af & 802.3at Class 0	NA
Wi-Fi	Supported Frequency	2.4 & 5 GHz
TCP/IP		Yes
IP V4/IP V6		Yes
DPWS		Yes
DHCP	Client	Yes
	Server (Separate Nework)	No
Modbus TCP/IP Server	Max. number of client connection	64
Modbus TCP/IP Client	Max. number of Modbus TCP/IP devices	NA
Schneider Electric Cloud Services		Yes
HTTPS		Yes
External Wi-Fi/Antenna		No
Wireless Devices (IEEE 802.15.4)		
Number of devices	Total for mixed network	20 devices
	PowerTag Energy & Easergy TH110/CL110	20 devices
	Other type of devices (+1)	20 devices
External IEEE 802.15.4 Antenna		No
Serial Ports		
Modbus RS485 Client	Max. number of devices w/o repeater	NA
	Max. number of devices with repeater	NA
	Maximum Length	NA
	Baud Rate	NA
Functionality		
Data Buffering for cloud applications		1 month
Data Logger and Web-Server	Data Logging	No
	Event logging	Yes (+2)
	Simple Monitoring Web-Pages	Yes
	Monitoring Web-Pages with historical data	No
Time Management	RTC (with battery)	Yes
	TimeUpdate (NTP & SNTP)	Yes
Digital inputs		
Two DI	WAGES & Dry-Contact	No
Environmental		
Protection Degree	Front Face	IP40
	Others	IP20
Overvoltage Category		OVC III
Polution Degree		2
Temperature	Operation	-25...+60 °C
	Storage	-40...+85 °C
Altitude Max.		< 2000 m
Relative Humidity		5...95 %
Mechanical		
Form factor		Acti9
Installation		Din Rail
Width		54 mm
Weight		163 g
Standard & Certification		
Certifications		CE, CULus, CB, RCM, UKCA, FCC, IC, RF, Marine certification (DNV)
Standards		EN/ IEC 61010-1, EN/IEC 61010-2-201, UL 61010-1, UL 61010-2-201, CSA C22.2 No 61010-1-12, CAN/ CSA C22.2 No 61010-2-201, EN IEC 62974-1, EN/IEC 61326-1, ETSI EN 301-489-1, ETSI EN 301-489-17, ETSI EN 300-328, IEEE 802.15.4, IEEE 802.11b/g/n, IEEE 802.3 af/at, EN 301-893, 47 CFR FCC Part 15, Subpart B, Class A, EN IEC 62311, ANSI C63, IACS UR E10, DNVGL-CG-0339

(+1) *Consult the User Manual or other documentations to check the limit applicable to your wireless device.*

(+2) *Lower limits may apply depending on the firmware version, the serial line length, and the type of device(s). Consult the User Manual, Release Notes or other documentations.*

Panel Server Entry

Panel Server Entry dimensions

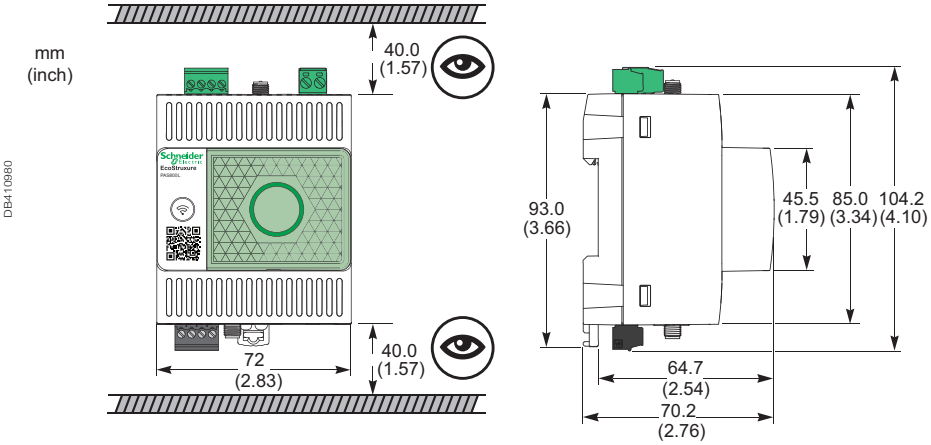

Panel Server Entry physical descriptions

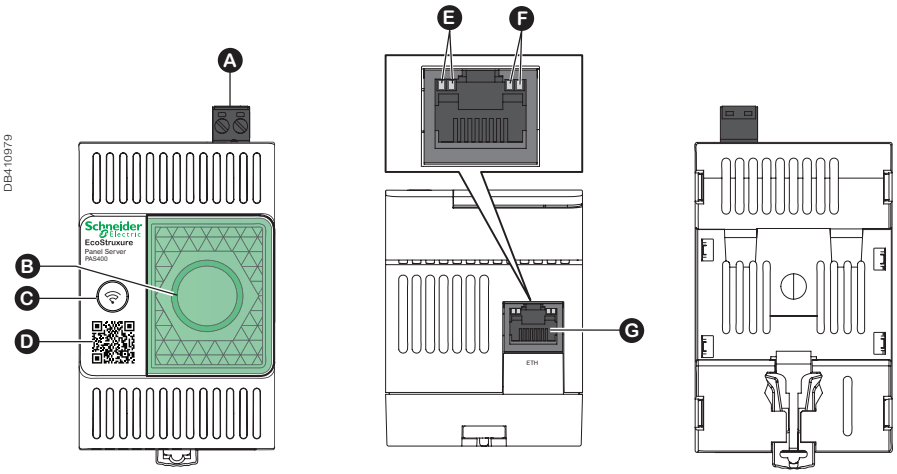

- A Power supply terminal block
- B EcoStruxure™ Panel Server status LED
- C Restart button
- D QR code to product information
- E Ethernet LED 1: Speed
- F Ethernet LED 2: Activity
- G Ethernet communication port

Please see the appropriate Installation Guide for accurate and complete information on the installation of this product.

Panel Server Universal

Panel Server Universal - Front ISO view

Standards & certifications

- IEC 61010-1
- IEC 61010-2-201
- UL 61010-1
- UL 61010-2-201
- IEC 62974-1
- ETSI EN 301 489-1 V.2.2.3
- ETSI EN 301 489-17 V.3.2.4
- IEC 61326-1
- IEC 62974-1
- EN50581
- EN 62321
- EN 62474
- ETSI EN 300 328 V2.2.2

Comm. Reference	Description
PAS600	Panel Server Universal with 110...277 V AC/DC power supply
PAS600L	Panel Server Universal with 24 V DC power supply
PAS600LWD	Wired by Design Panel Server Universal with 24 V DC Power
PAS600PWD	Wired by Design Panel Server Universal with PoE power supply

All-in-one and Wired by Design Panel Server

- The All-in-one Panel Server Universal is designed to retrieve data from wireless, Modbus, and Ethernet based protocols to offer versatility and adaptability.
- Panel Server Universal Wired by Design is designed for specific cybersecure sensitive installations, dedicated to wired communication protocols (Modbus, Ethernet) and PAS embedded digital inputs.(PAS600LWD).

Functions

- Connect to your monitoring and control software such as EcoStruxure™ Power Monitoring Expert, EcoStruxure™ Power Operation or to your Building Management System.
- Connect to Schneider Electric cloud applications such as EcoStruxure™ Energy Hub or Asset Advisor.
- Ease of commissioning with EcoStruxure™ Power Commission software or directly through the Panel Server webpages, enabling device plug-and-play and auto-discovery features.
- Ease of operation with user friendly embedded webpages, and data contextualization for more relevant analytics.

Main features

- Power Supply 24 V DC, 110...277 V AC/DC, PoE-PD (CLASS 0, IEEE 802.3af/at)
- Designed to match demanding electrical switchboard environment (temperature, humidity electromagnetic compatibility)
- Two Ethernet 10Base-T/100Base-T port (supporting switched or separated network topology)
- Wi-Fi (All-in-one Panel Server Universal)
- Modbus RS485 serial communication
- IEEE 802.15.4 wireless communication (All-in-one Panel Server Universal)
- Modbus TCP/IP server and client
- Support of HTTPS, NTP, SNTP, DHCP client and server with proxy management
- Modbus RS485 to Modbus TCP/IP Gateway
- Wireless devices concentrator to Modbus TCP/IP (All-in-one Panel Server Universal)
- Two digital inputs (24 V DC version only) for contact information or WAGES pulse meter
- Designed through a Secured Development Life Cycle in accordance to IEC 62443-4-1
- Commissioning through EcoStruxure™ Power Commission or through Embedded Web-Pages
- Speed-up commissioning through device list import and configuration export to the monitoring software
- Fully integrated in Cybersecurity Admin Expert tool to facilitate the management of cybersecurity in your electrical network's (Security features and measures such as enabling/disabling communication means or implementation of two Wired by Design models)
- Embedded web server for real-time measurement visualization, and power consumption
- Real-time alarm display

Accessories for All-in-one Panel Server Universal

- Wi-Fi external antenna (PASA-ANT1) for PAS600 and PAS600L

Panel Server Universal

Panel Server Universal technical specification

Technical data		EcoStruxure™ Panel Server Universal			
Commercial Reference		PAS600	PAS600L	PAS600LWD	PAS600PWD
Power Supply					
Voltage		110...277 V AC/DC	24 V DC	24 V DC	via POE
Tolerance		± 10%		± 10%	NA
Frequency		45...65 Hz	NA		
Maximum consumption		3 W/10 VA	3 W	3.5 W	
Ethernet & Wi-Fi					
Ethernet 10/100base T	Number of Ports	Two RJ45 ports			
	PoE 802.3af & 802.3at Class 0	No			1 port (PD)
Wi-Fi	Supported Frequency	2.4 GHz		-	-
TCP/IP		Yes			
IP V4/IP V6		Yes			
DPWS		Yes			
DHCP	Client	Yes			
	Server (Separate Nework)	Yes			
Modbus TCP/IP Server	Max. number of client connection	64			
Modbus TCP/IP Client	Max. number of Modbus TCP/IP devices	128 (+2)			
Schneider Electric Cloud Services		Yes			
HTTPS		Yes			
External Wi-Fi/Antenna		PASA-ANT1		-	-
Wireless Devices (IEEE 802.15.4)					
Number of devices	Total for mixed network	up to 40 devices (+2)		NA	
	PowerTag Energy & Easergy TH110/CL110	up to 85 devices (+2)		NA	
	Other type of devices (+1)	40 devices (+2)		NA	
Serial Ports					
Modbus RS485 Client	Max. number of devices w/o repeater	32 devices			
	Max. number of devices with repeater	128 devices			
	Maximum Length	1000 m			
	Baud Rate	1200, 2400, 4800, 9600, 19200, 38400, 57600, 115200			
Functionality					
Data Buffering for cloud applications		1 month			
Data Logger and Web-Server	Data Logging	No			
	Event logging	Yes (+2)			
	Simple Monitoring Web-Pages	Yes			
	Monitoring Web-Pages with historical data	No			
Time Management	RTC (with battery)	Yes			
	TimeUpdate (NTP & SNTP)	Yes			
Digital inputs					
Two DI	WAGES & Dry-Contact	No	Yes	Yes	No
Environmental					
Protection Degree	Front Face	IP40			
	Others	IP20			
OverVoltage Category		OVC III			
Polution Degree		2	3	3	2
Temperature	Operation	-25...+70 °C			
	Storage	-40...+85 °C			
Altitude Max.		< 2000 m	< 4000 m (+3)		< 2000 m
Relative Humidity		0...93%	5...95%	5...95%	0...93%
Mechanical					
Form factor		Acti9			
Installation		Din Rail			
Width		72 mm			
Weight		201 g	181 g	180 g	182 g
Standard & Certification					
Certifications		CE, CULus, CB, RCM, UKCA, FCC, IC, RF, Marine certification (DNV)		CE, CULus, CB, RCM, UKCA, FCC, IC, Marine certification (DNV)	
Standards		EN/ IEC 61010-1, EN/IEC 61010-2-201, UL 61010-1, UL 61010-2-201, CSA C22.2 No 61010-1-12, CAN/CSA C22.2 No 61010-2-201, EN IEC 62974-1, EN/IEC 61326-1, ETSI EN 301-489-1, ETSI EN 301-489-17, ETSI EN 300-328, IEEE 802.15.4, IEEE 802.11b/g/n, IEEE 802.3 af/at, IEC 60945, 47 CFR FCC Part 15, Subpart B, Class A, EN IEC 62311, ANSI C63, IACS UR E10, DNVGL-CG-0339, IEC62443-3-3 (PAS600L)		EN/ IEC 61010-1, EN/IEC 61010-2-201, UL 61010-1, UL 61010-2-201, CSA C22.2 No 61010-1-12, CAN/CSA C22.2 No 61010-2-201, EN IEC 62974-1, EN/IEC 61326-1, IEC 60945, 47 CFR FCC Part 15, Subpart B, Class A, IACS UR E10, DNVGL-CG-0339, EN 62947-1	

(+1) *Consult the User Manual or other documentations to check the limit applicable to your wireless device.*
(+2) *Lower limits may apply depending on the firmware version, the serial line length, and the type of device(s). Consult the User Manual, Release Notes or other documentations.*
(+3) *The maximum altitude can be less than 4000 m with an operating temperature of -25...+60 °C between 2000 m and 4000 m.*

Panel Server Universal

Panel Server Universal dimensions

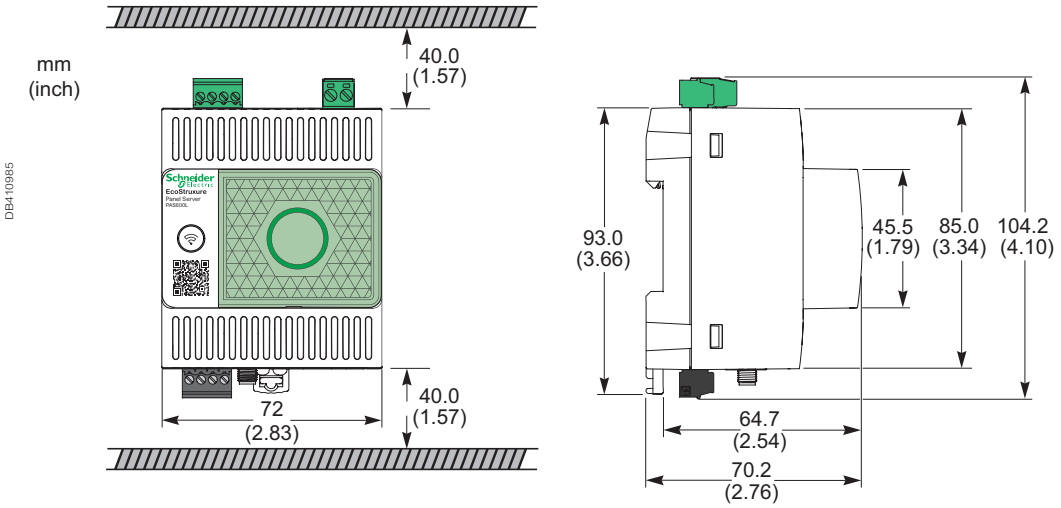

Panel Server Universal physical descriptions

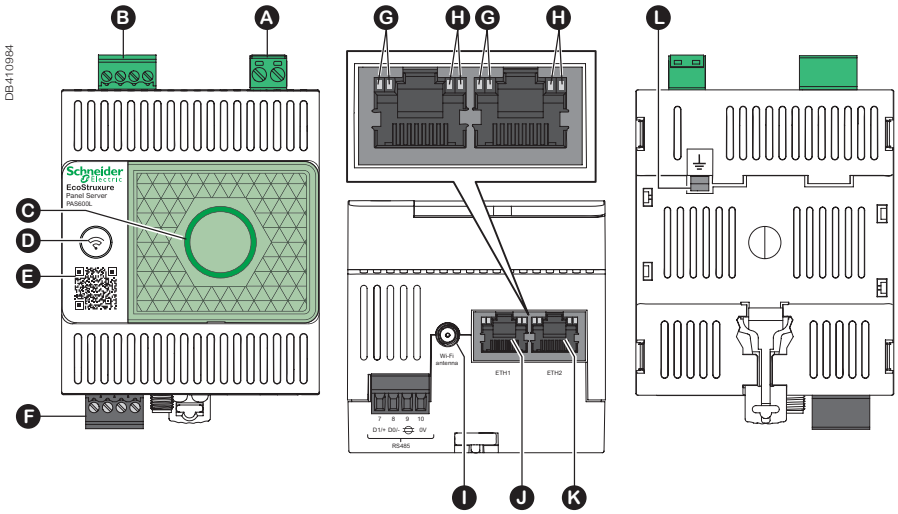

- A Power supply terminal block (PAS600, PAS600L, PAS600LWD)
- B Digital input terminal block (PAS600L and PAS600LWD)
- C EcoStruxure™ Panel Server status LED
- D Restart button
- E QR code to product information
- F RS-485 Modbus communication port
- G Ethernet LED 1: Speed
- H Ethernet LED 2: Activity
- I Wi-Fi external antenna port (PAS600 and PAS600L)
- J Ethernet 1 communication port
- K Ethernet 2 communication port (PAS600, PAS600L, and PAS600LWD)/Ethernet 2 communication port - PoE (PAS600PWD only)
- L Grounding connection

Please see the appropriate Installation Guide for accurate and complete information on the installation of this product.

Panel Server Advanced

DB410992

Panel Server Advanced- Front ISO view

Panel Server has Data Logger and Local Energy Server capabilities. It embodies the first step into energy monitoring.
Follow, analyze and compare your loads consumption to enable energy savings.

Functions

- An all-in-one gateway to retrieve data from both your wireless IEEE 802.15.4 devices and Modbus devices.
- Monitor up to three years historized data and analyze your energy consumption directly through the Panel Server Advanced embedded webpages.
- Connect to your monitoring and control software such as EcoStruxure™ Power Monitoring Expert, EcoStruxure™ Power Operation or to your Building Management System.
- Connect to Schneider Electric cloud applications such as EcoStruxure™ Energy Hub or Asset Advisor.
- Ease of commissioning with EcoStruxure™ Power Commission software or directly through the Panel Server webpages, enabling device plug-and-play and auto-discovery features.
- Ease of operation with user friendly embedded webpages, and data contextualization for more relevant analytics.

Main features

- Power Supply 24 V DC, 110...277 V AC/DC, PoE-PD (CLASS 0, IEEE802.3af/at)
- Designed to match demanding electrical switchboard environment (temperature, humidity electromagnetic compatibility)
- Two Ethernet 10Base-T/100Base-T port (supporting switched or separated network topology)
- Wi-Fi
- Modbus RS485 serial communication
- IEEE 802.15.4 wireless communication
- Modbus TCP/IP server and client
- Support of HTTPS, NTP, SNTP, DHCP client and server with proxy management
- Modbus RS485 to Modbus TCP/IP Gateway
- Wireless devices concentrator to Modbus TCP/IP
- Two digital inputs (24 V DC version only) for contact information or WAGES pulse meter
- Designed through a Secured Development Life Cycle in accordance to IEC 62443-4-1
- Commissioning through EcoStruxure™ Power Commission or though Embedded Web-Pages
- Speed-up commissioning through device list import and configuration export to the monitoring software
- Fully integrated in Cybersecurity Admin Expert tool for security settings (Security features such as enabling/disabling communication means)
- Embedded web server for real-time measurement and alarm visualization, energy & power consumption by usage and location, 3 years historical trending and dashboarding
- 3 years Data Logger with 32 GB memory
- Real-time alarm display and e-mail notification
- Event and alarm historization and dashboarding

Compatible accessories

- Wi-Fi external antenna (PASA-ANT1)
- IEEE 802.15.4 external antenna (PASA-ANT1)

Standards & certifications

- IEC 61010-1
- IEC 61010-2-201
- UL 61010-1
- UL 61010-2-201
- IEC 62974-1
- ETSI EN 301 489-1 V.2.2.3
- ETSI EN 301 489-17 V.3.2.4
- IEC 61326-1
- IEC 62974-1
- EN50581
- EN 62321
- EN 62474
- ETSI EN 300 328 V2.2.2

Comm. Reference	Description
PAS800L	Panel Server Advanced with 24 V DC power supply
PAS800P	Panel Server Advanced with PoE power supply
PAS800	Panel Server Advanced with 110...277 V AC/DC power supply

Panel Server Advanced

Panel Server Advanced technical specification

Technical data			EcoStruxure™ Panel Server Advanced	
Commercial Reference		PAS800	PAS800L	PAS800P
Power Supply				
Voltage		110...277 V AC/DC	24 V DC	PoE
Tolerance		± 10 %	± 10 %	
Frequency		45...65 Hz	NA	
Maximum consumption		3 W/10 VA	3 W	3.5 W
Ethernet & Wi-Fi				
Ethernet 10/100base T	Number of Ports	Two RJ45 ports		
	PoE 802.3af & 802.3at Class 0	No		1 port (PD)
Wi-Fi	Supported Frequency	2.4 & 5 GHz		
TCP/IP		Yes		
IP V4/IP V6		Yes		
DPWS		Yes		
DHCP	Client	Yes		
	Server (Separate Nework)	Yes		
Modbus TCP/IP Server	Max. number of client connection	64		
Modbus TCP/IP Client	Max. number of Modbus TCP/IP devices	128 (+2)		
Schneider Electric Cloud Services		Yes		
HTTPS		Yes		
External Wi-Fi/Antenna		PASA-ANT1		
Wireless Devices (IEEE 802.15.4)				
Number of devices	Total for mixed network	up to 40 devices (+2)		
	PowerTag Energy & Easergy TH110/CL110	up to 85 devices (+2)		
	Other type of devices (+1)	40 devices (+2)		
External IEEE 802.15.4 Antenna		PASA-ANT1		
Serial Ports				
Modbus RS485 Client	Max. number of devices w/o repeater	32 devices		
	Max. number of devices with repeater	128 devices		
	Maximum Length	1000 m		
	Baud Rate	1200, 4800, 9600, 19200, 38400, 57600, 115200		
Functionality				
Data Buffering for cloud applications		3 months		
Data Logger and Web-Server	Data Logging	3 years		
	Event logging	Yes (+2)		
	Simple Monitoring Web-Pages	Yes		
	Monitoring Web-Pages with historical data	Yes		
Time Management	RTC (with battery)	Yes		
	TimeUpdate (NTP & SNTP)	Yes		
Digital inputs				
Two DI	WAGES & Dry-Contact	No	Yes	No
Environmental				
Protection Degree	Front Face	IP40		
	Others	IP20		
OverVoltage Category		OVC III		
Polution Degree		2	3	2
Temperature	Operation	-25...70 °C		
	Storage	-40...85 °C		
Altitude Max.		< 2000 m	< 4000 m (+3)	< 2000 m
Relative Humidity		5...95%		
Mechanical				
Form factor		Acti9		
Installation		Din Rail		
Width		72 mm		
Weight		206 g	186 g	184 g
Standard & Certification				
Certifications		CE, CULus, CB, RCM, UKCA, FCC, IC, RF, Marine certification (DNV)		
Standards		EN/ IEC 61010-1, EN/IEC 61010-2-201, UL 61010-1, UL 61010-2-201, CSA C22.2 No 61010-1-12, CAN/CSA C22.2 No 61010-2-201, EN IEC 62974-1, EN/IEC 61326-1, ETSI EN 301-489-1, ETSI EN 301-489-17, ETSI EN 300-328, IEEE 802.15.4, IEEE 802.11b/g/n, IEEE 802.3 af/at, EN 301-893, IEC 60945, 47 CFR FCC Part 15, Subpart B, Class A, EN IEC 62311		

(+1) *Consult the User Manual or other documentations to check the limit applicable to your wireless device.*

(+2) *Lower limits may apply depending on the firmware version, the serial line length, and the type of device(s). Consult the User Manual, Release Notes or other documentations.*

(+3) *The maximum altitude can be less than 4000 m with an operating temperature of -25...+60 °C between 2000 m and 4000 m.*

Panel Server Advanced

Panel Server Advanced dimensions

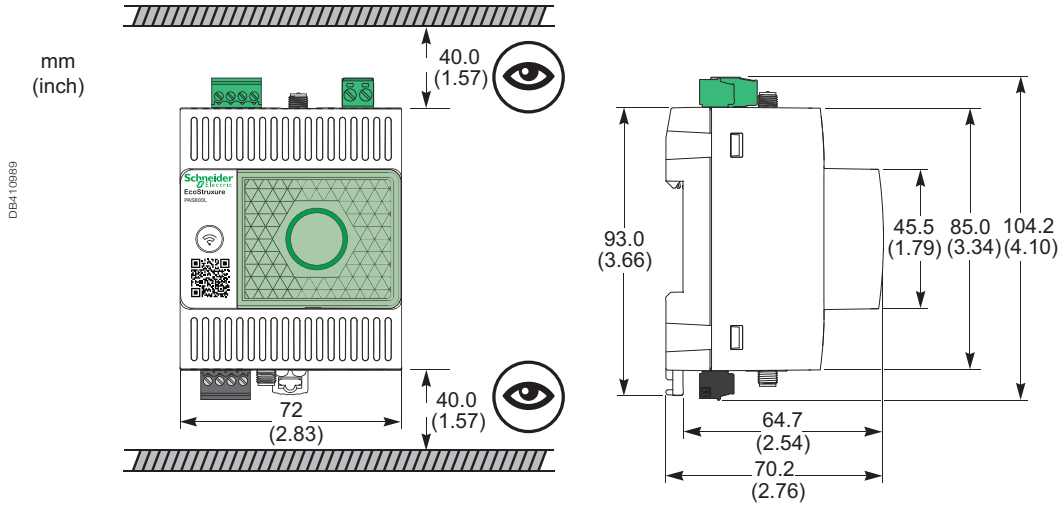

Panel Server Advanced physical descriptions

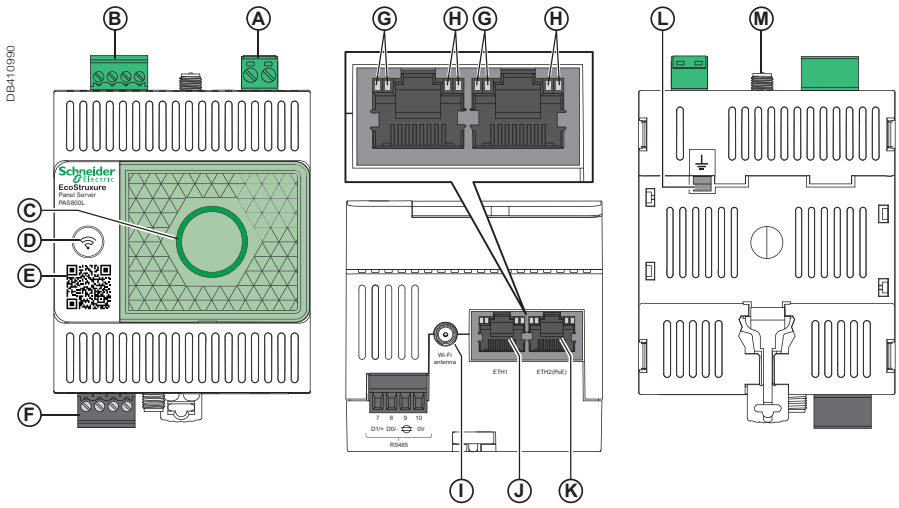

- A Power supply terminal block (PAS800 & PAS800L only)
- B Digital input terminal block (PAS800L only)
- C EcoStruxure™ Panel Server status LED
- D Restart button
- E QR code to product information
- F RS-485 Modbus communication port
- G Ethernet LED 1: Speed
- H Ethernet LED 2: Activity
- I Wi-Fi external antenna port
- J Ethernet 1 communication port
- K Ethernet 2 communication port (PAS800 & PAS800L only)/Ethernet 2 communication port - PoE (PAS800P only)
- L Grounding connection
- M IEEE802.15.4 external antenna port

Please see the appropriate Installation Guide for accurate and complete information on the installation of this product.

Commercial Reference Numbers

Commercial reference number	Description	Page
	Current Transformers	**8**
	CT Ip/5 A ratio	**10**
16550	44 x 66 x 37 Adapter for DIN rails Mounting plate	
16551	56 x 84 x 60 Adapter for DIN rails Mounting plate, insulated locking screw	
METSECT5CC004	CC 40 A	
METSECT5CC005	CC 50 A	
METSECT5CC006	CC 60 A	
METSECT5CC008	CC 75 A	
METSECT5CC010	CC 100 A	
METSECT5CC013	CC 125 A	
METSECT5CC015	CC 150 A	
METSECT5CC020	CC 200 A	
METSECT5CC025	CC 250 A	
METSECT5MB025	MB 250 A	
METSECT5MB030	MB 300 A	
METSECT5MB040	MB 400 A	
METSECT5MA015	MA 150 A	
METSECT5MA020	MA 200 A	
METSECT5MA025	MA 250 A	
METSECT5MA030	MA 300 A	
METSECT5MA040	MA 400 A	
METSECT5MC025	MC 250 A	
METSECT5MC030	MC 300 A	
METSECT5MC040	MC 400 A	
METSECT5MC050	MC 500 A	
METSECT5MC060	MC 600 A	
METSECT5MC080	MC 800 A	
METSECT5MD050	MD 500 A	
METSECT5MD060	MD 600 A	
METSECT5MD080	MD 800 A	
METSECT5CYL1	Cylinder 8.5 mm dia.	
METSECT5CYL2	Cylinder 10.5 mm dia.	
METSECT5COVER	sealable cover 60.5 x 22 x 23.5 mm for CT TI	
METSECT5VV500	CT tropicalised 5000 5 bars 55x165	
METSECT5VV600	CT tropicalised 6000 5 bars 55x165	
METSECT5DA040	CT tropicalised 400 5 dual out. bars 32x65	
METSECT5DA050	CT tropicalised 500 5 dual out. bars 32x65	
METSECT5DA060	CT tropicalised 600 5 dual out. bars 32x65	
METSECT5DA080	CT tropicalised 800 5 dual out. bars 32x65	
METSECT5DA100	CT tropicalised 1000 5 dual out. bars 32x65	
METSECT5DA125	CT tropicalised 1250 5 dual out. bars 32x65	
METSECT5DA150	CT tropicalised 1500 5 dual out. bars 32x65	
METSECT5DB100	CT tropicalised 1000 5 dual out. bars 38x127	
METSECT5DB125	CT tropicalised 1250 5 dual out. bars 38x127	
METSECT5DB150	CT tropicalised 1500 5 dual out. bars 38x127	
METSECT5DB200	CT tropicalised 2000 5 dual out. bars 38x127	
METSECT5DB250	CT tropicalised 2500 5 dual out. bars 38x127	

Commercial reference number	Description	Page
METSECT5DB300	CT tropicalised 3000 5 dual out. bars 38x127	
METSECT5DC200	CT tropicalised 2000 5 dual out. bars 52x127	
METSECT5DC250	CT tropicalised 2500 5 dual out. bars 52x127	
METSECT5DC300	CT tropicalised 3000 5 dual out. bars 52x127	
METSECT5DC400	CT tropicalised 4000 5 dual out. bars 52x127	
METSECT5DD100	CT tropicalised 1000 5 dual out. bars 34x84	
METSECT5DD125	CT tropicalised 1250 5 dual out. bars 34x84	
METSECT5DD150	CT tropicalised 1500 5 dual out. bars 34x84	
METSECT5DE100	CT tropicalised 1000 5 dual out. bars 54x102	
METSECT5DE125	CT tropicalised 1250 5 dual out. bars 54x102	
METSECT5DE150	CT tropicalised 1500 5 dual out. bars 54x102	
METSECT5DE200	CT tropicalised 2000 5 dual out. bars 54x102	
METSECT5DH125	CT tropicalised 1250 5 dual out. bars 38x102	
METSECT5DH150	CT tropicalised 1500 5 dual out. bars 38x102	
METSECT5DH200	CT tropicalised 2000 5 dual out. bars 38x102	
	Split core CTs	**20**
	Busbar Type H	
	Frame 1	
METSECT5HA015	IEC Split Core CT Cable 150/5 A 1 VA cl.1	
METSECT5HA020	IEC Split Core CT Cable 200/5 A 1.5 VA cl.1	
METSECT5HA025	IEC Split Core CT Cable 250/5 A 1 VA cl.0.5	
	Frame 2	
METSECT5HD025	IEC Split Core CT Cable 250/5 A 1 VA cl.1	
METSECT5HD030	IEC Split Core CT Cable 300/5 A 1.5 VA cl.1	
METSECT5HD040	IEC Split Core CT Cable 400/5 A 2.5 VA cl.1	
METSECT5HD050	IEC Split Core CT Cable 500/5 A 1VA cl.0.5	
	Frame 3	
METSECT5HG010	IEC Split Core CT Cable 100/5 A 1.5 VA cl.3	
METSECT5HG013	IEC Split Core CT Cable 125/5 A 2.5 VA cl.3	
METSECT5HG015	IEC Split Core CT Cable 150/5 A 3 VA cl.3	
METSECT5HG020	IEC Split Core CT Cable 200/5 A 3 VA cl.3	
METSECT5HG025	IEC Split Core CT Cable 250/5 A 3 VA cl.3	
METSECT5HG030	IEC Split Core CT Cable 300/5 A 2.5 VA cl.1	
METSECT5HG040	IEC Split Core CT Cable 400/5 A 5 VA cl.1	
METSECT5HG050	IEC Split Core CT Cable 500/5 A 5 VA cl.1	
METSECT5HG060	IEC Split Core CT Cable 600/5 A 5 VA cl.1	
	Frame 4	
METSECT5HJ030	IEC Split Core CT Cable 300/5 A 2.5 VA cl.1	
METSECT5HJ040	IEC Split Core CT Cable 400/5 A 5VA cl.1	
METSECT5HJ050	IEC Split Core CT Cable 500/5 A 5VA cl.1	
METSECT5HJ060	IEC Split Core CT Cable 600/5 A 2.5 VA cl.0.5	
METSECT5HJ075	IEC Split Core CT Cable 750/5 A 2.5 VA cl.0.5	
METSECT5HJ080	IEC Split Core CT Cable 800/5 A 2.5 VA cl.0.5	

PowerLogic™ Commercial Reference Numbers

Commercial reference number	Description	Page
	Frame 5	
METSECT5HM030	IEC Split Core CT Cable 300/5 A 2.5 VA cl.1	
METSECT5HM040	IEC Split Core CT Cable 400/5 A 5 VA cl.1	
METSECT5HM050	IEC Split Core CT Cable 500/5 A 5 VA cl.1	
METSECT5HM060	IEC Split Core CT Cable 600/5 A 2.5 VA cl.0.5	
METSECT5HM075	IEC Split Core CT Cable 750/5 A 2.5 VA cl.0.5	
METSECT5HM080	IEC Split Core CT Cable 800/5 A 2.5 VA cl.0.5	
	Frame 6	
METSECT5HP025	IEC Split Core CT Cable 250/5 A 1.5 VA cl.1	
METSECT5HP030	IEC Split Core CT Cable 300/5 A 2.5 VA cl.1	
METSECT5HP040	IEC Split Core CT Cable 400/5 A 5 VA cl.1	
METSECT5HP050	IEC Split Core CT Cable 500/5 A 5 VA cl.1	
METSECT5HP060	IEC Split Core CT Cable 600/5 A 5 VA cl.1	
METSECT5HP075	IEC Split Core CT Cable 750/5 A 5 VA cl.1	
METSECT5HP080	IEC Split Core CT Cable 800/5 A 5 VA cl.1	
METSECT5HP100	IEC Split Core CT Cable 1000/5 A 5 VA cl.1	
	Busbar Type G	
	Frame 7	
METSECT5GA010	IEC CT Split Core Busbar 100/5 A 1.25 VA cl.3	
METSECT5GA015	IEC CT Split Core Busbar 150/5 A 1.5 VA cl.3	
METSECT5GA020	IEC CT Split Core Busbar 200/5 A 2.5 VA cl.3	
METSECT5GA025	IEC CT Split Core Busbar 250/5 A 1.5 VA cl.1	
METSECT5GA030	IEC CT Split Core Busbar 300/5 A 3.75 VA cl.1	
METSECT5GA040	IEC CT Split Core Busbar 400/5 A 1 VA cl.0.5	
	Frame 8	
METSECT5GD025	IEC CT Split Core Busbar 250/5 A 1.5 VA cl.1	
METSECT5GD030	IEC CT Split Core Busbar 300/5 A 2.5 VA cl.1	
METSECT5GD040	IEC CT Split Core Busbar 400/5 A 1 VA cl.0.5	
METSECT5GD050	IEC CT Split Core Busbar500/5 A 2.5 VA cl.0.5	
METSECT5GD060	IEC CT Split Core Busbar 600/5 A 2.5 VA cl.0.5	
METSECT5GD075	IEC CT Split Core Busbar 750/5 A 2.5 VA cl.0.5	
METSECT5GD080	IEC CT Split Core Busbar 800/5 A 2.5 VA cl.0.5	
METSECT5GD100	IEC CT Split Core Busbar 1000/5 A 5 VA cl.0.5	
	Frame 9	
METSECT5GG025	IEC CT Split Core Busbar 250/5 A 1.5 VA cl.1	
METSECT5GG030	IEC CT Split Core Busbar 300/5 A 2.5 VA cl.1	
METSECT5GG040	IEC CT Split Core Busbar 400/5 A 2.5 VA cl.1	
METSECT5GG050	IEC CT Split Core Busbar 500/5 A 2.5 VA cl.0.5	
METSECT5GG060	IEC CT Split Core Busbar 600/5 A 2.5 VA cl.0.5	
METSECT5GG075	IEC CT Split Core Busbar 750/5 A 2.5 VA cl.0.5	
METSECT5GG080	IEC CT Split Core Busbar 800/5 A 2.5 VA cl.0.5	
METSECT5GG100	IEC CT Split Core Busbar 1000/5 A 5 VA cl.0.5	
METSECT5GG120	IEC CT Split Core Busbar 1200/5 A 5 VA cl.0.5	
METSECT5GG125	IEC CT Split Core Busbar 1250/5 A 7.5 VA cl.0.5	
METSECT5GG150	IEC CT Split Core Busbar 1500/5 A 7.5 VA cl.0.5	
	Frame 10	
METSECT5GJ100	IEC CT Split Core Busbar 1000/5 A 10 VA cl.0.5	
METSECT5GJ120	IEC CT Split Core Busbar 1200/5 A 10 VA cl.0.5	
METSECT5GJ150	IEC CT Split Core Busbar 1500/5 A 10 VA cl.0.5	
METSECT5GJ160	IEC CT Split Core Busbar 1600/5 A 10 VA cl.0.5	
METSECT5GJ200	IEC CT Split Core Busbar 2000/5 A 10 VA cl.0.5	
METSECT5GJ250	IEC CT Split Core Busbar 2500/5 A 10 VA cl.0.5	
METSECT5GJ300	IEC CT Split Core Busbar 3000/5 A 15 VA cl.0.5	
METSECT5GJ400	IEC CT Split Core Busbar 4000/5 A 15 VA cl.0.5	

Commercial reference number	Description	Page
	Rogowski CTs	26
METSECTR25500	Rogowski CT, 250 mm core length, 80 mm dia.	
METSECTR30500	Rogowski CT, 300 mm core length, 96 mm dia.	
METSECTR46500	Rogowski CT, 400 mm core length, 146 mm dia.	
METSECTR60500	Rogowski CT, 600 mm core length, 191 mm dia.	
METSECTR90500	Rogowski CT, 900 mm core length, 287 mm dia.	
	Panel Instruments	27
	DIN rail analog ammeters, voltmeters	28
16029	0-30 A no 8	
16030	X/5 8	
16031	0-5 A	
16032	0-50 A 50/5	
16033	0-75 A 75/5	
16034	0-100 A 100/5	
16035	0-150 A 150/5	
16036	0-200 A 200/5	
16037	0-250 A 250/5	
16038	0-300 A 300/5	
16039	0-400 A 400/5	
16040	0-500 A 500/5	
16041	0-600 A 600/5	
16042	0-800 A 800/5	
16043	0-1000 A 1000/5	
16044	0-1500 A 1500/5	
16045	0-2000 A 2000/5	
16060	0-300 V 8	
16061	0-500 V 8	
	DIN rail digital ammeters, voltmeter, frequency meter	29
15202	Direct reading iAMP 0-10 A No 4	
15209	Multi-rating iAMP 0-5000 A As per rating 4	
15201	iVLT 0-600 V 4	
15208	iFRE 20-100 Hz 4	
	72x72 analog ammeter, voltmeter	30
16003	AMP for motor feeder	
16004	AMP for standard feeder X/5	
16009	AMP for standard feeder 0-50 A 50/5	
16010	AMP for standard feeder 0-100 A 100/5	
16011	AMP for standard feeder 0-200 A 200/5	
16012	AMP for standard feeder 0-400 A 400/5	
16013	AMP for standard feeder 0-600 A 600/5	
16014	AMP for standard feeder 0-1000 A 1000/5	
16015	AMP for standard feeder 0-1250 A 1250/5	
16016	AMP for standard feeder 0-1500 A 1500/5	
16019	AMP for standard feeder 0-2000 A 2000/5	
16006	AMP for motor feeder 0-30-90 A 30/5	
16007	AMP for motor feeder 0-75-225 A 75/5	
16008	AMP for motor feeder 0-200-600 A 200/5	
16005	VLT 0-500 V	
	96x96 analog ammeter, voltmeter	31
16074	AMP for standard feeder X/5	
16079	AMP for standard feeder 0-50 A 50/5	
16080	AMP for standard feeder 0-100 A 100/5	
16081	AMP for standard feeder 0-200 A 200/5	
16082	AMP for standard feeder 0-400 A 400/5	
16083	AMP for standard feeder 0-600 A 600/5	
16084	AMP for standard feeder 0-1000 A 1000/5	
16085	AMP for standard feeder 0-1250 A 1250/5	
16086	AMP for standard feeder 0-1500 A 1500/5	
16087	AMP for standard feeder 0-2000 A 2000/5	
16088	AMP for standard feeder 0-2500 A 2500/5	
16089	AMP for standard feeder 0-3000 A 3000/5	

PowerLogic™ Commercial Reference Numbers

Commercial reference number	Description	Page
16090	AMP for standard feeder 0-4000 A 4000/5	
16091	AMP for standard feeder 0-5000 A 5000/5	
16092	AMP for standard feeder 0-6000 A 6000/5	
16073	AMP for motor feeder X/5	
16076	AMP for motor feeder 0-30-90 A 30/5	
16077	AMP for motor feeder 0-75-225 A 75/5	
16078	AMP for motor feeder 0-200-600 A 200/5	
16075	VLT 0-500 V	
	48x48 CMA, CMV selector switches	**32**
16017	CMA 20 4	
16018	CMV 500 7	
	DIN rail iCMA, iCMV selector switches	**33**
15126	iCMA 10 415 4	
15125	iCMV 10 415 4	
	iCH hour counter	**34**
15440	iCH "DIN" 230 V AC ± 10 %/50 Hz 4mm	
15607	CH "48 x 48" 24 V AC ± 10 %/50 Hz	
15608	CH "48 x 48" 230 V AC ± 10 %/50 Hz	
15609	CH "48 x 48" 12 to 36 V DC	
	iCI impulse counter	**35**
15443	iCI 4mm impulse counter DIN	
	Basic Energy Metering	**38**
	iEM2xxx	**39**
A9MEM2000T	iEM2000T basic energy meter, no display	
A9MEM2000	iEM2000 basic energy meter	
A9MEM2010	iEM2010 energy meter, kWh pulse output	
A9MEM2100	iEM2100 basic energy meter	
A9MEM2050	iEM2050 modular single phase power meter 230 V - 45 A with Modbus	
A9MEM2055	iEM2055 modular single phase power meter 230 V - 45 A with Modbus, MID	
A9MEM2105	iEM2105 energy meter, kWh pulse output with partial meter	
A9MEM2110	iEM2110 energy meter, kWh and kvarh pulse outputs with two tariffs, four quadrant energy measurement, MID certified	
A9MEM2135	iEM2135 energy meter, M-Bus communication, four quadrant energy measurement, two tariffs, MID certified	
A9MEM2150	iEM2150 energy meter, Modbus communication, four quadrant energy measurement	
A9MEM2155	iEM2155 energy meter, Modbus communication, four quadrant energy measurement, two tariffs, MID certified	
A9MEM2435	iEM2435 power and energy meter, Class 1, 230 V, 100 A, M-Bus, MID, 2 tariffs, 2 pulse outputs, 4 quadrants, LCD display	
A9MEM2455	iEM2455 power and energy meter, Class 1, 230 V, 100 A, RS-485, MID, 2 tariffs, 2 pulse outputs, 4 quadrants, LCD display	
	iEM3000	**44**
A9MEM3100	iEM3100 basic energy meter	
A9MEM3110	iEM3110 energy meter with pulse output	
A9MEM3115	iEM3115 multi-tariff energy meter	
A9MEM3135	iEM3135 advanced multi-tariff energy meter & electrical parameter plus M-Bus comm port	
A9MEM3150	iEM3150 energy meter & electrical parameter plus Modbus RS-485 comm port	
A9MEM3155	iEM3155 advanced multi-tariff energy meter & electrical parameter plus Modbus RS-485 comm port	
A9MEM3165	iEM3165 advanced multi-tariff energy meter & electrical parameter plus BACnet MS/TP comm port	
A9MEM3175	iEM3175 advanced multi-tariff energy meter & electrical parameter plus LON TP/FT-10 comm port	
A9MEM3200	iEM3200 basic energy meter	
A9MEM3210	iEM3210 energy meter with pulse output	
A9MEM3215	iEM3215 multi-tariff energy meter	
A9MEM3235	iEM3235 advanced multi-tariff energy meter & electrical parameter plus M-Bus comm port	

Commercial reference number	Description	Page
A9MEM3250	iEM3250 energy meter & electrical parameter plus Modbus RS-485 comm port	
A9MEM3255	iEM3255 advanced multi-tariff energy meter & electrical parameter plus Modbus RS485 comm port	
A9MEM3265	iEM3265 advanced multi-tariff energy meter & electrical parameter plus BACnet MS/TP comm port	
A9MEM3275	iEM3275 advanced multi-tariff energy meter & electrical parameter plus LON TP/FT-10 comm port	
A9MEM3300	iEM3300 basic energy meter	
A9MEM3310	iEM3310 energy meter with pulse output	
A9MEM3335	iEM3335 advanced multi-tariff energy meter & electrical parameter plus M-Bus comm port	
A9MEM3350	iEM3350 energy meter & electrical parameter plus Modbus RS-485 comm port	
A9MEM3355	iEM3355 advanced multi-tariff energy meter & electrical parameter plus Modbus RS485 comm port	
A9MEM3365	iEM3365 advanced multi-tariff energy meter & electrical parameter plus BACnet MS/TP comm port	
A9MEM3375	iEM3375 advanced multi-tariff energy meter & electrical parameter plus LON TP/FT-10 comm port	
A9MEM3455	iEM3455 advanced multi-tariff energy meter & electrical parameter plus Modbus RS-485 comm port	
A9MEM3465	iEM3465 advanced multi-tariff energy meter & electrical parameter plus BACnet MS/TP comm port	
A9MEM3555	iEM3555 advanced multi-tariff energy meter & electrical parameter plus Modbus RS-485 comm port	
A9MEM3565	iEM3565 advanced multi-tariff energy meter & electrical parameter plus BACnet MS/TP comm port	
	LVCTs	**48**
LVCT00050S	CT, split-core, Size 0, 50 A to 0.333 V	
LVCT00101S	CT, split-core, Size 1, 100 A to 0.333 V	
LVCT00201S	CT, split-core, Size 1, 200 A to 0.333 V	
LVCT00102S	CT, split-core, Size 2, 100 A to 0.333 V	
LVCT00202S	CT, split-core, Size 2, 200 A to 0.333 V	
LVCT00302S	CT, split-core, Size 2, 300 A to 0.333 V	
LVCT00403S	CT, split-core, Size 3, 400 A to 0.333 V	
LVCT00603S	CT, split-core, Size 3, 600 A to 0.333 V	
LVCT00803S	CT, split-core, Size 3, 800 A to 0.333 V	
LVCT00804S	CT, split-core, Size 4, 800 A to 0.333 V	
LVCT01004S	CT, split-core, Size 4, 1000 A to 0.333 V	
LVCT01204S	CT, split-core, Size 4, 1200 A to 0.333 V	
LVCT01604S	CT, split-core, Size 4, 1600 A to 0.333 V	
LVCT02004S	CT, split-core, Size 4, 2000 A to 0.333 V	
LVCT02404S	CT, split-core, Size 4, 2400 A to 0.333 V	
	PM3000	**50**
METSEPM3200	PM3200 basic power meter	
METSEPM3210	PM3210 power meter with pulse output	
METSEPM3250	PM3250 power meter with RS485 port	
METSEPM3255	PM3255 power meter plus 2 digital inputs, 2 digital outputs with RS-485 port	
	PowerTag Energy	**56**
A9MEM1520	PowerTag Energy M63 1P+W	
A9MEM1521	PowerTag Energy M63 1P+N Top	
A9MEM1522	PowerTag Energy M63 1P+N Bottom	
A9MEM1540	PowerTag Energy M63 3P	
A9MEM1541	PowerTag Energy M63 3P+N Top	
A9MEM1542	PowerTag Energy M63 3P+N Bottom	
A9MEM1543	PowerTag Energy M63 3P 230 V LL	
A9MEM1560	PowerTag Energy F63 1P+N	
A9MEM1561	PowerTag Energy P63 1P+N Top	
A9MEM1562	PowerTag Energy P63 1P+N Bottom	
A9MEM1563	PowerTag Energy P63 1P+N B RCBO	
A9MEM1564	PowerTag Energy F63 1P+N 110 V	
A9MEM1570	PowerTag Energy F63 3P+N	
A9MEM1571	PowerTag Energy P63 3P+N Top	
A9MEM1572	PowerTag Energy P63 3P+N Bottom	
A9MEM1573	PowerTag Energy F63 3P	

PowerLogic™ Commercial Reference Numbers

Commercial reference number	Description	Page
A9MEM1574	PowerTag Energy F63 3P+N 127/220 V	
A9MEM1580	PowerTag Energy F160 3P / 3P+N	
A9MEM1590	PowerTag Energy R200 3P / 3P+N	
A9MEM1591	PowerTag Energy R600 3P / 3P+N	
A9MEM1592	PowerTag Energy R1000 3P / 3P+N	
A9MEM1593	PowerTag Energy R2000 3P / 3P+N	
LV434020	PowerTag Energy M250 3P	
LV434021	PowerTag Energy M250 3P+N	
LV434022	PowerTag Energy M630 3P	
LV434023	PowerTag Energy M630 3P+N	
R9M20	PowerTag Energy R9 M63 1P+W	
R9M21	PowerTag Energy R9 M63 1P+N Top	
R9M22	PowerTag Energy R9 M63 1P+N Bottom	
R9M40	PowerTag Energy R9 M63 3P	
R9M41	PowerTag Energy R9 M63 3P+N Top	
R9M42	PowerTag Energy R9 M63 3P+N Bottom	
R9M43	PowerTag Energy R9 M63 3P 230 V LL	
R9M60	PowerTag Energy R9 F63 1P+N	
R9M70	PowerTag Energy R9 F63 3P+N	
	Wireless Products	**98**
	PowerTag Control	**99**
A9XMC2D3	PowerTag C 2DI 230V digital input module	
	HeatTag	**103**
SMT10020	HeatTag smart sensor cable overheating	
	Basic Multi-Function Metering	**106**
	PM5000	**107**
METSEPM5100	Power Meter, 600V AC L-L/ 5A or 1A input, 415V AC L-L or 250V DC control power, Cl 0.5S, 15th harmonic, 1DO	
METSEPM5110	Power Meter, 600V AC L-L/ 5A or 1A input, 415V AC L-L or 250V DC control power, Cl 0.5S, 15th harmonic, 1DO, RS-485	
METSEPM5111	Power Meter, 600V AC L-L/ 5A or 1A input, 415V AC L-L or 250V DC control power, Cl 0.5S, 15th harmonic, 1DO, RS-485, MID	
METSEPM5310	Power Meter, 600V AC L-L/ 5A or 1A input, 415V AC L-L or 250V DC control power, Cl 0.5S, 31st harmonic, 256 kB, 2DI/2DO, RS-485	
METSEPM5310R	Power Meter, 600V AC L-L/ RJ45 LVCT input, 415V AC L-L or 250V DC control power, Cl 0.5S, 31st harmonic, 256 kB, 2DI/2DO, RS-485	
METSEPM5320	Power Meter, 600V AC L-L/ 5A or 1A input, 415V AC L-L or 250V DC control power, Cl 0.5S, 31st harmonic, 256 kB, 2DI/2DO, Ethernet	
METSEPM5320R	Power Meter, 600V AC L-L/ RJ45 LVCT input, 415V AC L-L or 250V DC control power, Cl 0.5S, 31st harmonic, 256 kB, 2DI/2DO, Ethernet	
METSEPM5330	Power Meter, 600V AC L-L/ 5A or 1A input, 415V AC L-L or 250V DC control power, Cl 0.5S, 31st harmonic, 256 kB, 2DI/2DO/2-Relay, RS-485	
METSEPM5331	Power Meter, 600V AC L-L/ 5A or 1A input, 415V AC L-L or 250V DC control power, Cl 0.5S, 31st harmonic, 256 kB, 2DI/2DO/2-Relay, RS-485, MID	
METSEPM5340	Power Meter, 600V AC L-L/ 5A or 1A input, 415V AC L-L or 250V DC control power, Cl 0.5S, 31st harmonic, 256 kB, 2DI/2DO/2-Relay, Ethernet	
METSEPM5341	Power Meter, 600V AC L-L/ 5A or 1A input, 415V AC L-L or 250V DC control power, Cl 0.5S, 31st harmonic, 256 kB, 2DI/2DO/2-Relay, Ethernet, MID	
METSEPM5560	Power Meter, 690V AC L-L/ 5A or 1A input, 480V AC L-L or 250V DC control power, Cl 0.2S, 63rd harmonic, 1.1 MB, 4DI/2-DO, RS-485, Ethernet	
METSEPM5561	Power Meter, 690V AC L-L/ 5A or 1A input, 480V AC L-L or 250V DC control power, Cl 0.2S, 63rd harmonic, 1.1 MB, 4DI/2-DO, RS-485, Ethernet, MID	
METSEPM5562	Power Meter, 690V AC L-L/ 5A or 1A input, 480V AC L-L or 250V DC control power, Cl 0.2S, 63rd harmonic, 1.1 MB, 4DI/2-DO, RS-485, Ethernet, RMI CAN approved, Hardware lockable	
METSEPM5562MC	Power Meter, 690V AC L-L/ 5A or 1A input, 480V AC L-L or 250V DC control power, Cl 0.2S, 63rd harmonic, 1.1 MB, 4DI/2-DO, RS-485, Ethernet, RMI CAN approved, Factory sealed	

Commercial reference number	Description	Page
METSEPM5563	Power Meter, 690V AC L-L/ 5A or 1A input, 480V AC L-L or 250V DC control power, Cl 0.2S, 63rd harmonic, 1.1 MB, 4DI/2-DO, RS-485, Ethernet, DIN mount, No display	
METSEPM5563RD	Power Meter, 690V AC L-L/ 5A or 1A input, 480V AC L-L or 250V DC control power, Cl 0.2S, 63rd harmonic, 1.1 MB, 4DI/2-DO, RS-485, Ethernet, DIN mount, Remote display	
METSEPM5570	Power Meter, 690V AC L-L/ 5A or 1A input, 480V AC L-L or 250V DC control power, Cl 0.2S, 63rd harmonic, 1.1 MB, 2DI/2AI/2-DO, RS-485, Ethernet	
METSEPM5580	Power Meter, 690V AC L-L/ 5A or 1A input, 24 to 64V DC control power, Cl 0.2S, 63rd harmonic, 1.1 MB, 4DI/2-DO, RS-485, Ethernet	
METSEPM5650	Power Meter, 690V AC L-L/ 5A or 1A input, 480V AC L-L or 250V DC control power, Cl 0.2S, 63rd harmonic, 1.1 MB, 4DI/2-DO, RS-485, Ethernet, Wave Form Capture and Sag/swell	
METSEPM5660	Power Meter, 690V AC L-L/ 5A or 1A input, 480V AC L-L or 250V DC control power, Cl 0.2S, 63rd harmonic, 1.1 MB, 2DI/2-DO, RS-485, Ethernet, Residual Current Monitor	
METSEPM5661	Power Meter, 690V AC L-L/ 5A or 1A input, 480V AC L-L or 250V DC control power, Cl 0.2S, 63rd harmonic, 1.1 MB, 2DI/2-DO, RS-485, Ethernet, Residual Current Monitor, MID	
METSEPM5760	Power Meter, 690V AC L-L/ 5A or 1A input, 480V AC L-L or 250V DC control power, Cl 0.2S, 63rd harmonic, 1.1 MB, 2DI/2-DO, RS-485, Ethernet, Wave Form Capture and Sag/swell, Residual current monitor	
METSEPM5761	Power Meter, 690V AC L-L/ 5A or 1A input, 480V AC L-L or 250V DC control power, Cl 0.2S, 63rd harmonic, 1.1 MB, 2DI/2-DO, RS-485, Ethernet, Wave Form Capture and Sag/swell, Residual current monitor, MID	
	Residual Current Monitoring Toroids (Vigirex) - Closed Toroids, A Type	**117**
50437	TA30 - closed toroid A type, for RCM enabled power meters, 30 mm inner diameter, rated current 65 Amps, 1000 turns	
50438	PA50 - closed toroid A type, for RCM enabled power meters, 50 mm inner diameter, rated current 85 Amps, 1000 turns	
50439	IA80 - closed toroid A type, for RCM enabled power meters, 80 mm inner diameter, rated current 160 Amps, 1000 turns	
50440	MA120 - closed toroid A type, for RCM enabled power meters, 120 mm inner diameter, rated current 250 Amps, 1000 turns	
50441	SA200 - closed toroid A type, for RCM enabled power meters, 200 mm inner diameter, rated current 400 Amps, 1000 turns	
50442	GA300 - closed toroid A type, for RCM enabled power meters, 300 mm inner diameter, rated current 630 Amps, 1000 turns	
	Accessories for Closed Toroids	**117**
56055	Magnetic ring/ Iron screen accessory for TA30 toroid sensor	
56056	Magnetic ring/ Iron screen accessory for PA50 toroid sensor	
56057	Magnetic ring/ Iron screen accessory for IA80 toroid sensor	
56058	Magnetic ring/ Iron screen accessory for MA120 toroid sensor	
	Residual Current Monitoring Toroids (Vigirex) - Split Toroids, OA Type	**117**
50420	TOA80 - split toroid OA type, 80 mm inner diameter, rated current 160 Amps, 1000 turns	
50421	TOA120 - split toroid OA type, 120 mm inner diameter, rated current 250 Amps, 1000 turns	
56053	L1 type - rectangular sensor, width 280 x height 115 mm, rated current 1600 Amps, 1000 turns	
56054	L2 type - rectangular sensor, width 470 x height 160 mm, rated current 3200 Amps, 1000 turns	
	0.333V (1/3 Volts), 3-in-1 CTs with RJ45 connectors for PM53x0R LVCT enabled power meter	**118**
METSECTV25006	LVCT Solid core 3 in 1 with RJ45 cable, 25 mm phase center, 60 Amps, 0.333V output	
METSECTV25010	LVCT Solid core 3 in 1 with RJ45 cable, 25 mm phase center, 100 Amps, 0.333V output	
METSECTV25013	LVCT Solid core 3 in 1 with RJ45 cable, 25 mm phase center, 125 Amps, 0.333V output	
METSECTV25016	LVCT Solid core 3 in 1 with RJ45 cable, 25 mm phase center, 160 Amps, 0.333V output	

PowerLogic™ Commercial Reference Numbers

Commercial reference number	Description	Page
METSECTV35006	LVCT Solid core 3 in 1 with RJ45 cable, 35 mm phase center, 60 Amps, 0.333V output	
METSECTV35010	LVCT Solid core 3 in 1 with RJ45 cable, 35 mm phase center, 100 Amps, 0.333V output	
METSECTV35012	LVCT Solid core 3 in 1 with RJ45 cable, 35 mm phase center, 120 Amps, 0.333V output	
METSECTV35013	LVCT Solid core 3 in 1 with RJ45 cable, 35 mm phase center, 125 Amps, 0.333V output	
METSECTV35015	LVCT Solid core 3 in 1 with RJ45 cable, 35 mm phase center, 150 Amps, 0.333V output	
METSECTV35016	LVCT Solid core 3 in 1 with RJ45 cable, 35 mm phase center, 160 Amps, 0.333V output	
METSECTV35020	LVCT Solid core 3 in 1 with RJ45 cable, 35 mm phase center, 200 Amps, 0.333V output	
METSECTV35025	LVCT Solid core 3 in 1 with RJ45 cable, 35 mm phase center, 250 Amps, 0.333V output	
METSECTV45025	LVCT Solid core 3 in 1 with RJ45 cable, 45 mm phase center, 250 Amps, 0.333V output	
METSECTV45030	LVCT Solid core 3 in 1 with RJ45 cable, 45 mm phase center, 300 Amps, 0.333V output	
METSECTV45040	LVCT Solid core 3 in 1 with RJ45 cable, 45 mm phase center, 400 Amps, 0.333V output	
METSECTV45050	LVCT Solid core 3 in 1 with RJ45 cable, 45 mm phase center, 500 Amps, 0.333V output	
METSECTV45060	LVCT Solid core 3 in 1 with RJ45 cable, 45 mm phase center, 600 Amps, 0.333V output	
METSECTV45063	LVCT Solid core 3 in 1 with RJ45 cable, 45 mm phase center, 630 Amps, 0.333V output	
METSECTV29006	LVCT Solid core 3 in 1 with RJ45 cable, 29 mm phase center, 60 Amps, 0.333V output	
METSECTV29010	LVCT Solid core 3 in 1 with RJ45 cable, 29 mm phase center, 100 Amps, 0.333V output	
METSECTV29012	LVCT Solid core 3 in 1 with RJ45 cable, 29 mm phase center, 120 Amps, 0.333V output	
METSECTV29013	LVCT Solid core 3 in 1 with RJ45 cable, 29 mm phase center, 125 Amps, 0.333V output	
METSECTV29015	LVCT Solid core 3 in 1 with RJ45 cable, 29 mm phase center, 150 Amps, 0.333V output	
METSECTV29016	LVCT Solid core 3 in 1 with RJ45 cable, 29 mm phase center, 160 Amps, 0.333V output	
METSECTV29020	LVCT Solid core 3 in 1 with RJ45 cable, 29 mm phase center, 200 Amps, 0.333V output	
METSECTV70080	LVCT Solid core 3 in 1 with RJ45 cable, 70 mm phase center, 800 Amps, 0.333V output	
METSECTV70100	LVCT Solid core 3 in 1 with RJ45 cable, 70 mm phase center, 1000 Amps, 0.333V output	
METSECTV70125	LVCT Solid core 3 in 1 with RJ45 cable, 70 mm phase center, 1250 Amps, 0.333V output	
	Cable	**118**
METSEPM5CAB03	RJ25 cable assembly for interfacing PM5563 meter and PM5RD remote display with 0.3 meter cable length	
METSEPM5CAB1	RJ25 cable assembly for interfacing PM5563 meter and PM5RD remote display with 1.0 meter cable length	
METSEPM5CAB10	RJ25 cable assembly for interfacing PM5563 meter and PM5RD remote display with 10 meter cable length	
METSEPM5CAB3	RJ25 cable assembly for interfacing PM5563 meter and PM5RD remote display with 3 meter cable length	
METSEPM5CAB4	RJ25 cable assembly for interfacing PM5563 meter and PM5RD remote display with 4 meter cable length	
	Other related products	**118**
METSEPM5RD	Remote display unit for PM5563 power meter supplied with mounting bracket, gasket, anti-rotation pin and RJ25 cable METSEPMCABxy	
METSEPM51HK	Hardware kit for PM51xx comprises 2 retainer clips and spare connectors for - Voltage in, Control power in, Digital IO & RS-485	
METSEPM53HK	Hardware kit for PM51xx comprises 2 retainer clips and spare connectors for - Voltage in, Control power in, Digital IO, Relay & RS-485	
METSEPM51_3RSK	Revenue sealing kit for PM51XX & PM53XX	
METSEPM55RSK	Revenue sealing kit for PM55XX	
METSEPM55HK	Hardware kit for PM55xx	
METSEPM5CAB3	Remote Display cable	

Commercial reference number	Description	Page
	PM5350	**120**
METSEPM5350	RS-485 Modbus, THD, 4DI, 2Relay	
METSEPM5350IB	RS-485, 4DI/2Relay, Multi-level alarm, UL480V, 4DI/2Relay	
METSEPM5350PB	RS-485, 4DI/2Relay, Multi-level alarm, UL300V, 4DI/2Relay	
METSEPM5350P	RS-485 Modbus, THD, 31st Individual harmonics, Multi-tariff, 4DI/2Relay	
	EcoStruxure™ Panel Server	**127**
	Panel Server Entry	**129**
PAS400	Panel Server Entry 110..277 V AC/DC	
	Panel Server Universal	**132**
PAS600L	Panel Server Universal with 24 V DC power supply	
PAS600T	Panel Server Universal with 100-240 V AC/DC power supply	
PAS600	Panel Server Universal with 100-277 V AC/DC power supply	
	Panel Server Advanced	**135**
PAS800L	Panel Server Advanced with 24 V DC power supply	
PAS800P	Panel Server Advanced with PoE power supply	
PAS800	Panel Server Advanced with 100-277 V AC/DC power supply	

For any enclosure or product configuration not listed, please see your Schneider Electric Representative for complete ordering information.

www.se.com

Schneider Electric Industries SAS
35, Rue Joseph Monier
CS 30323
92506 Rueil Malmaison Cedex

RCS Nanterre 954 503 439
Capital social 928 298 512 €
www.se.com

July 2024
Panel Builders Catalog
PLSED310126EN

© 2024 - Schneider Electric. All rights reserved.
All trademarks are owned by Schneider Electric Industries SAS or its affiliated companies.

As standards, specifications and designs develop from time to time, please ask for confirmation of the information given in this document.

Over 75 % of Schneider Electric products have been awarded the Green Premium ecolabel.

Green Premium™