Product data sheet

Specifications

Mini circuit breaker, Homeline, 15A, 1 pole, 120/240VAC, 10kA AIR, standard type, plug in, UL

HOM115C

Product availability: Stock - Normally stocked in distribution facility

Main

Product	Miniature circuit-breaker
Range	Homeline
Current Rating	15 A
Certifications	UL Listed
Voltage Rating	120/240 V AC
Mounting Type	Plug-in
Number of Poles	1P
Short Circuit Current Rating	10 kA
Number of Spaces	1
Circuit Breaker Type	Standard
Ratings	HACR and Switching Duty rated
Electrical Connection	Screw clamp terminals
Wire Size	1 x AWG 14...AWG 8 (aluminium/copper) 2 x AWG 14...AWG 10 (copper)
Type of Packing	Clam packaging

Complementary

Tightening torque	35.4 lbf.in (4.0 N.m) 0.004…0.009 in² (2.5…6 mm²) (AWG 14...AWG 8)
Height	3.13 in (79.50 mm)
Width	1 in (25.4 mm)
Depth	2.98 in (75.69 mm)

Environment

Ambient air temperature for operation	104 °F (40 °C)

Ordering and shipping details

Category	US10CPH01320
Discount Schedule	0CPH
GTIN	047569062872
Returnability	Yes

Packing Units

Price is “List Price” and may be subject to a trade discount – check with your local distributor or retailer for actual price.

Disclaimer: This documentation is not intended as a substitute for and is not to be used for determining suitability or reliability of these products for specific user applications

Unit Type of Package 1	PCE
Nbr. of units in pkg.	1
Package 1 Height	1.20 in (3.048 cm)
Package 1 Width	4.40 in (11.176 cm)
Package 1 Length	4.40 in (11.176 cm)
Package weight(Lbs)	5.120 oz (145.149 g)
Unit Type of Package 2	CAR
Number of Units in Package 2	6
Package 2 Height	5.20 in (13.208 cm)
Package 2 Width	4.80 in (12.192 cm)
Package 2 Length	6.80 in (17.272 cm)
Package 2 Weight	34.399 oz (975.223 g)
Unit Type of Package 3	PAL
Number of Units in Package 3	2304
Package 3 Height	40.00 in (101.600 cm)
Package 3 Width	40.00 in (101.600 cm)
Package 3 Length	48.00 in (121.920 cm)
Package 3 Weight	826.00002 lb(US) (374.667 kg)

Contractual warranty

Warranty	Lifetime

Environmental Data

Schneider Electric aims to achieve Net Zero status by 2050 through supply chain partnerships, lower impact materials, and circularity via our ongoing “Use Better, Use Longer, Use Again” campaign to extend product lifetimes and recyclability.

Environmental Data explained

How we assess product sustainability

Use Better

Materials and Substances

Packaging made with recycled cardboard	**Yes**
Packaging without single use plastic	**No**
EU RoHS Directive	**Compliant**
REACh Regulation	**REACh Declaration**

Use Again

Repack and remanufacture

Circularity Profile	**No need of specific recycling operations**
Take-back	**No**

Technical Illustration

Dimensions

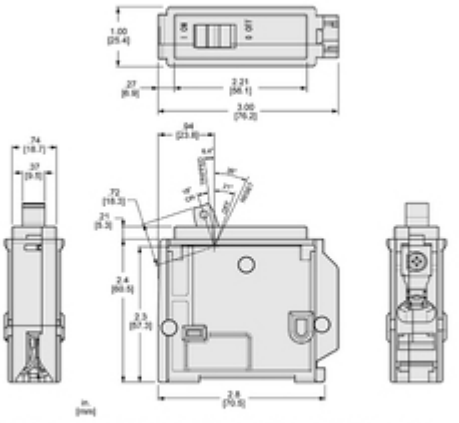

All dimensions are approximate. Also refer to technical drawings and documentation.

Image of product / Alternate images

Alternative

Technical Benefits
Thermal Magnetic Breaker
Miniature circuit breaker rated at 15A
Protects against overloads and short-circuits
For residential/ commercial use to protect entire branch circuits
The current capacity that this circuit breaker is able to interrupt before breaking is 10kA
Commercially package and ready to be sold
Compatible with Homeline electrical panels and CSEDs with 1 spaces

MFG Model Number
HOM115CP
3.13 in
2.98 in
1 in
Dimensions

Compatible products
Homeline 15 Amp Single Pole Circuit Breaker
MFG Model Number: HOM115CP
Compatible with Homeline electrical panels and CSEDs with 1 space
HOM1HTCP
HOM1PACP