Product data sheet

Specifications

dPAC module, Modicon M251

TM251MDESE

Main

Range of product	Modicon M251
Product or component type	Processor module
[Us] rated supply voltage	24 V DC

Complementary

Maximum number of I/O expansion module	7 (local I/O-Architecture) 14 (remote I/O-Architecture)
Supply voltage limits	19.2…28.8 V
Power consumption in W	45 W (with max number of I/O expansion module)
Memory capacity	64 MB for system memory RAM
Data backed up	128 MB built-in flash memory for backup of user programs
Data storage equipment	<= 16 GB SD card (optional)
Battery type	BR2032 lithium non-rechargeable, battery life: 4 year(s)
Backup time	2 years at 25 °C
Realtime clock	With
Clock drift	<= 60 s/month at -10…50 °C
Integrated connection type	USB port with mini B USB 2.0 connector Non isolated serial link serial with RJ45 connector and RS232/RS485 interface Dual-port Ethernet 1 with 2 RJ45 connector Ethernet port Ethernet 2 with RJ45 connector
Port Ethernet	Ethernet marking 10BASE-T/100BASE-TX - 2 copper cable
Communication service	Modbus TCP client Modbus TCP server OPC UA server NTP client
Local signalling	1 LED (green) for PWR 1 LED (green) for RUN 1 LED (red) for module error (ERR) 1 LED (red) for I/O error (I/O) 1 LED (green) for SD card access (SD) 1 LED (red) for BAT 1 LED (green) for SL 1 LED (red) for bus fault on TM4 (TM4)
Electrical connection	removable screw terminal blockpower supply (pitch 3.81 mm)
Marking	CE
Surge withstand	1 kV shielded cable common mode conforming to EN/IEC 61000-4-5 1 kV power lines common mode conforming to EN/IEC 61000-4-5 0.5 kV power lines differential mode conforming to EN/IEC 61000-4-5

Disclaimer: This documentation is not intended as a substitute for and is not to be used for determining suitability or reliability of these products for specific user applications

Mounting support	Top hat type TH35-15 rail conforming to IEC 60715 Top hat type TH35-7.5 rail conforming to IEC 60715 plate or panel with fixing kit
Height	90 mm
Depth	90 mm
Width	54 mm
Product weight	0.22 kg

Environment

Standards	ANSI/ISA 12-12-01 CSA C22.2 No 142 CSA C22.2 No 213 EN/IEC 61131-2 UL 508
Product certifications	cULus CSA RCM CE Achilles UKCA
Resistance to electrostatic discharge	8 kV in air conforming to EN/IEC 61000-4-2 4 kV on contact conforming to EN/IEC 61000-4-2
Resistance to electromagnetic fields	10 V/m 80 MHz...1 GHz conforming to EN/IEC 61000-4-3 3 V/m 1.4 GHz...2 GHz conforming to EN/IEC 61000-4-3 1 V/m 2 GHz...3 GHz conforming to EN/IEC 61000-4-3
Resistance to fast transients	2 kV (power lines) conforming to EN/IEC 61000-4-4 1 kV (Ethernet line) conforming to EN/IEC 61000-4-4 1 kV (serial link) conforming to EN/IEC 61000-4-4
Resistance to conducted disturbances	10 V 80...1000 MHz conforming to EN/IEC 61000-4-3 3 V 1.4 GHz...2 GHz conforming to EN/IEC 61000-4-3 1 V 2 GHz...3 GHz conforming to EN/IEC 61000-4-3
Electromagnetic emission	Conducted emissions - test level: 120...69 dBµV/m QP (power lines) at 10…150 kHz conforming to IEC 61000-6-4 Conducted emissions - test level: 63 dBµV/m QP (power lines) at 1.5…30 MHz conforming to IEC 61000-6-4 Radiated emissions - test level: 40 dBµV/m QP class A (10 m) at 30…230 MHz conforming to IEC 61000-6-4 Conducted emissions - test level: 79...63 dBµV/m QP (power lines) at 150…1500 kHz conforming to IEC 61000-6-4 Radiated emissions - test level: 47 dBµV/m QP class A (10 m) at 230…1000 MHz conforming to IEC 61000-6-4
Immunity to microbreaks	10 ms
Ambient air temperature for operation	-10…35 °C (vertical installation) -10…55 °C (horizontal installation)
Ambient air temperature for storage	-40…70 °C
Relative humidity	10…95 %, without condensation (in operation) 10…95 %, without condensation (in storage)
IP degree of protection	IP20 with protective cover in place
Pollution degree	2
Operating altitude	0...2000 m
Storage altitude	0…3000 m
Vibration resistance	3.5 mm at 5…8.4 Hz on symmetrical rail 1 gn at 8.4…150 Hz on symmetrical rail 3 gn at 8.7…150 Hz on panel mounting
Shock resistance	15 gn for 11 ms

Packing Units

Unit Type of Package 1	PCE
Number of Units in Package 1	1
Package 1 Height	10.600 cm
Package 1 Width	12.000 cm
Package 1 Length	17.000 cm
Package 1 Weight	372.000 g
Unit Type of Package 2	S03
Number of Units in Package 2	10
Package 2 Height	30.000 cm
Package 2 Width	30.000 cm
Package 2 Length	40.000 cm
Package 2 Weight	4.348 kg

Environmental Data

Schneider Electric aims to achieve Net Zero status by 2050 through supply chain partnerships, lower impact materials, and circularity via our ongoing “Use Better, Use Longer, Use Again” campaign to extend product lifetimes and recyclability.

Environmental Data explained >

How we assess product sustainability >

Environmental footprint

Total lifecycle Carbon footprint	696
Environmental Disclosure	Product Environmental Profile

Use Better

Materials and Substances

Packaging made with recycled cardboard	Yes
Packaging without single use plastic	Yes
EU RoHS Directive	Pro-active compliance (Product out of EU RoHS legal scope)
SCIP Number	C0f4b1e4-ee0f-48bb-9bdf-1bcc0df7db56
REACh Regulation	REACh Declaration
California proposition 65	WARNING: This product can expose you to chemicals including: Lead and lead compounds, which is known to the State of California to cause cancer and birth defects or other reproductive harm. For more information go to www.P65Warnings.ca.gov

Use Again

Repack and remanufacture

End of life manual availability	End of Life Information
Take-back	No
WEEE Label	The product must be disposed on European Union markets following specific waste collection and never end up in rubbish bins

Dimensions Drawings

Dimensions

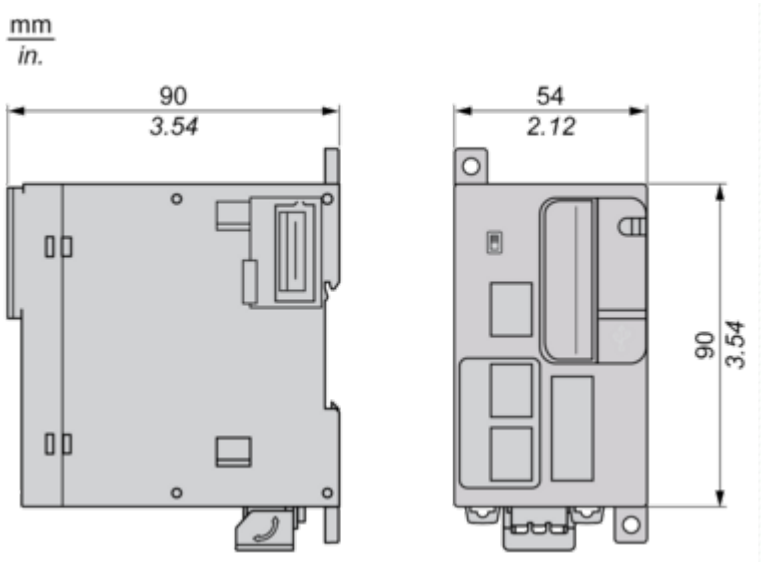

Mounting and Clearance

Mounting and Clearance

Clearance

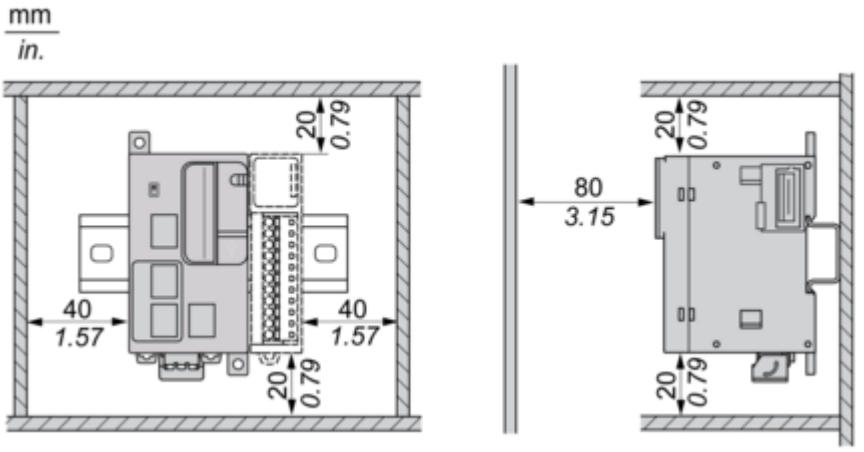

Mounting Position

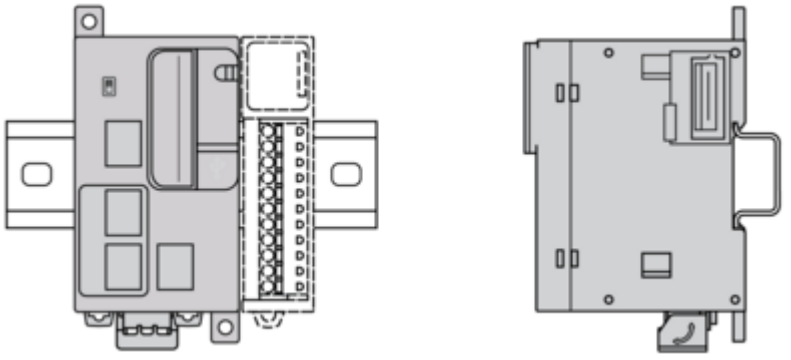

NOTE: Keep adequate spacing for proper ventilation and to maintain an ambient temperature between -10°C (14°F) and 55°C (131°F).

Acceptable Mounting

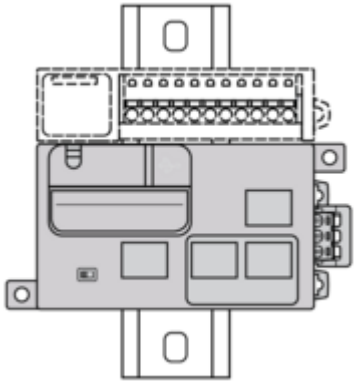

NOTE: Expansion modules must be mounted above the controller.

Incorrect Mounting

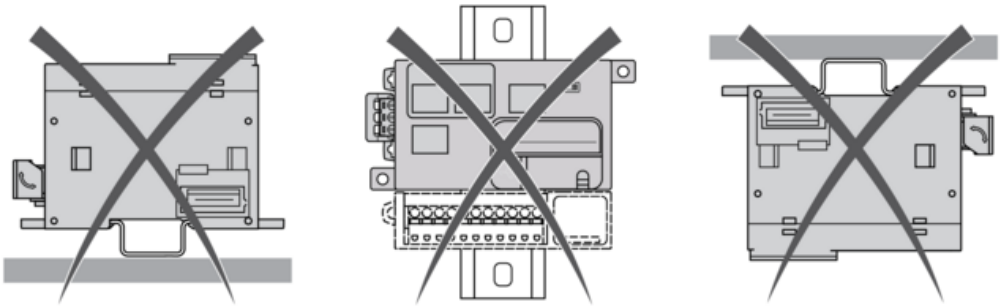

Direct Mounting on a Panel Surface

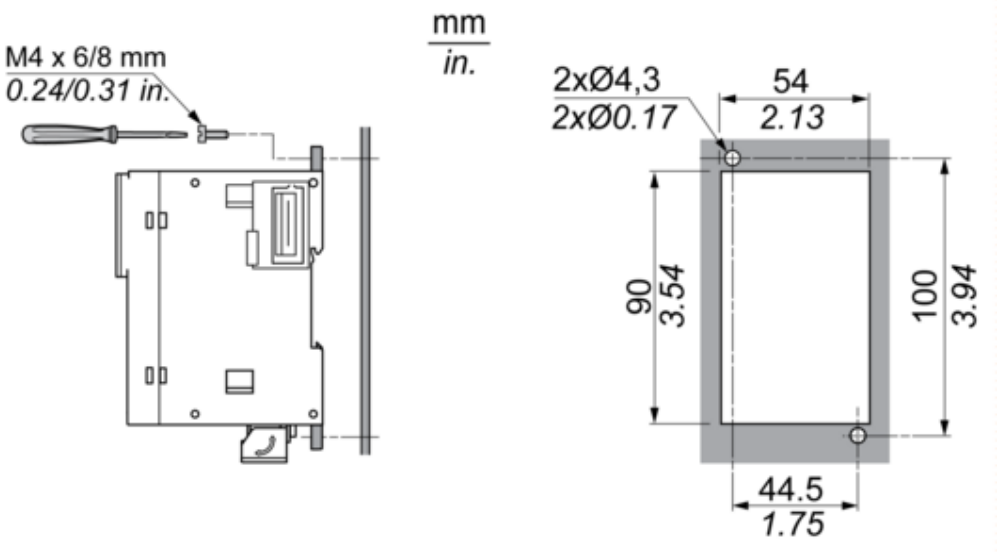

Connections and Schema

Wiring

USB Connection to a PC

Ethernet Connection to a PC

CANopen

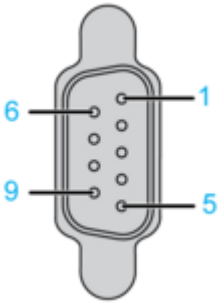

Pin	Signal	Description
1	–	Reserved
2	CAN_L	CAN_L bus line
3	CAN_GND	CAN ground
4	–	Reserved
5	(CAN_SHLD)	Optional CAN shield
6	GND	Ground
7	CAN_H	CAN_H bus line

Pin	Signal	Description
8	–	Reserved
9	(CAN_V+)	Optional CAN external positive supply

Image of product / Alternate images

Alternative

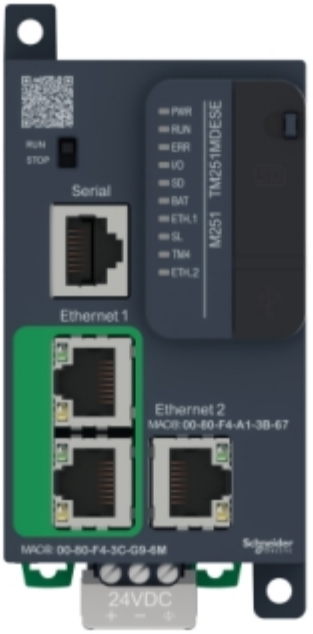
RUN
STOP
Serial
Ethernet 1
Ethernet 2
MAC@: 00-80-F4-A1-3B-67
MAC@: 00-80-F4-3C-C9-4M
24VDC
PWR
RUN
ERR
I/O
SD
BAT
ETH.1
SL
TM4
ETH.2
M251
TM251MDESE

Schneider Electric
Modicon TM251MDESE
Remove this sticker to connect Expansion Module
WARNING
Explosion Hazard-
Do Not Disconnect While
Circuit Is Alive Unless Area
Is Known To Be Non-Hazardous