Product data sheet

Specifications

Mini circuit breaker, Homeline, 15A, 1 pole, 120VAC, 10kA AIR, combo arc fault, plug on neutral, plug in, UL [TAA]

HOM115PCAFIC

Product availability: Stock - Normally stocked in distribution facility

Main

Product	Miniature circuit-breaker
Range	Homeline
Current Rating	15 A
Certifications	UL Listed
Voltage Rating	120 V AC
Mounting Type	Plug-in
Number of Poles	1P
Short Circuit Current Rating	10 kA
Number of Spaces	1
Circuit Breaker Type	Combination ARC-fault
Ratings	HACR rated
Electrical Connection	Screw clamp terminals
Wire Size	1 x AWG 14...AWG 8 (aluminium/copper)
Type of Packing	Clam packaging

Complementary

Connections - Terminals	Plug-on neutral
Tightening torque	35.4 lbf.in (4.0 N.m) 0.004…0.009 in² (2.5…6 mm²) (AWG 14...AWG 8)
Height	3.13 in (79.50 mm)
Width	1 in (25.4 mm)
Depth	2.98 in (75.69 mm)
Product Weight	0.66 lb(US) (0.30 kg)

Environment

Ambient Air Temperature for Operation	104 °F (40 °C)

Ordering and shipping details

Category	US10CPH01321
Discount Schedule	0CPH
GTIN	785901978787
Returnability	Yes

Price is “List Price” and may be subject to a trade discount – check with your local distributor or retailer for actual price.

Disclaimer: This documentation is not intended as a substitute for and is not to be used for determining suitability or reliability of these products for specific user applications

Country of origin	MX

Packing Units

Unit Type of Package 1	PCE
Nbr. of units in pkg.	1
Package 1 Height	1.30 in (3.302 cm)
Package 1 Width	4.50 in (11.430 cm)
Package 1 Length	8.00 in (20.320 cm)
Package weight(Lbs)	9.600 oz (272.155 g)
Unit Type of Package 2	CAR
Number of Units in Package 2	3
Package 2 Height	4.00 in (10.160 cm)
Package 2 Width	4.70 in (11.938 cm)
Package 2 Length	8.40 in (21.336 cm)
Package 2 Weight	32.959 oz (934.400 g)

Contractual warranty

Warranty	Lifetime

Environmental Data

Schneider Electric aims to achieve Net Zero status by 2050 through supply chain partnerships, lower impact materials, and circularity via our ongoing “Use Better, Use Longer, Use Again” campaign to extend product lifetimes and recyclability.

Environmental Data explained

How we assess product sustainability

Environmental footprint

Carbon footprint (kg CO2 eq, Total Life cycle)	41
Environmental Disclosure	Product Environmental Profile

Use Better

Materials and Substances

Packaging made with recycled cardboard	No
Packaging without single use plastic	No
EU RoHS Directive	Compliant with Exemptions
California proposition 65	WARNING: This product can expose you to chemicals including: Lead and lead compounds, which is known to the State of California to cause cancer and birth defects or other reproductive harm. For more information go to www.P65Warnings.ca.gov
Halogen content performance	Halogen free product

Use Again

Repack and remanufacture

Circularity Profile	End of Life Information
Take-back	No

Technical Illustration

Dimensions

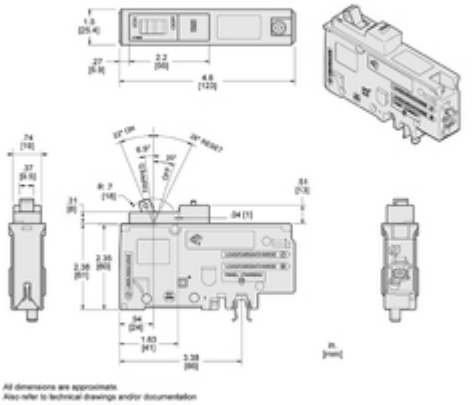

Image of product / Alternate images

Alternative