UL2808 Low Voltage Current Transformers (LVCT)

Z205398-0K

Solid-Core Models

Split-Core Models

NOTE: Do not use the product if it is damaged. Contact Schneider Electric customer care representative for support (www.se.com/support).

The CE and UKCA marking indicates RoHS compliance as per latest EU RoHS directive.

1 Safety Precautions

Important Information

Read these instructions carefully and look at the equipment to become familiar with the device before trying to install, operate, service or maintain it. The following special messages may appear throughout this bulletin or on the equipment to warn of potential hazards or to call attention to information that clarifies or simplifies a procedure.

The addition of either symbol to a “Danger” or “Warning” safety label indicates that an electrical hazard exists which will result in personal injury if the instructions are not followed.

This is the safety alert symbol. It is used to alert you to potential personal injury hazards. Obey all safety messages that follow this symbol to avoid possible injury or death.

DANGER

DANGER indicates an hazardous situation which, if not avoided, **will result in** death or serious injury. / **DANGER** indique un danger immédiat qui, s’il n’est pas évité, entraînera la mort ou des blessures graves.

WARNING / AVERTISSEMENT

WARNING indicates an hazardous situation which, if not avoided, **could result in** death or serious injury. / **AVERTISSEMENT** indique un danger potentiel qui, s’il n’est pas évité, pourrait entraîner la mort ou des blessures graves.

CAUTION / ATTENTION

CAUTION indicates an hazardous situation which, if not avoided, **could result in** minor or moderate injury. / **ATTENTION** indique un danger potentiel qui, s’il n’est pas évité, pourrait entraîner des blessures légères ou de gravité moyenne.

NOTICE / AVIS

NOTICE is used to address practices not related to physical injury. / **NOTE** concerne des questions non liées à des blessures corporelles.

Please note

Electrical equipment should be installed, operated, serviced and maintained only by qualified personnel. No responsibility is assumed by Schneider Electric for any consequences arising out of the use of this material.

A qualified person is one who has skills and knowledge related to the construction, installation and operation of electrical equipment and has received safety training to recognize and avoid the hazards involved.

1 Safety Precautions

Installation, wiring, testing and service must be performed in accordance with all local and national electrical codes.

DANGER

HAZARD OF ELECTRIC SHOCK, EXPLOSION, OR ARC FLASH / RISQUE D’ÉLECTROCUTION, D’EXPLOSION OU D’ARC ÉLECTRIQUE

- Apply appropriate personal protective equipment (PPE) and follow safe electrical work practices. See NFPA 70E in the USA or applicable local standards. / Portez un équipement de protection individuelle (EPI) approprié et observez les règles de sécurité en matière de travaux électriques. Consultez la norme NFPA 70E aux États-Unis ou les normes locales applicables.
- This equipment must only be installed and serviced by qualified electrical personnel. / Cet équipement ne doit être installé et entretenu que par du personnel qualifié.
- Turn off all power supplying equipment before working on or inside the equipment. / Coupez toutes les équipements d’alimentation électrique avant de travailler sur ou dans l’équipement.
- Product may use multiple voltage/power sources. Disconnect ALL sources before servicing. / Le produit est susceptible d’utiliser plusieurs sources de tension, d’alimentation. Déconnectez TOUTES les sources avant toute intervention d’entretien.
- Use a properly rated voltage sensing device to confirm that power is off. DO NOT depend on this product for voltage indication. / Utilisez un dispositif de détection de tension adéquat afin de vérifier que l’alimentation est bien coupée. NE considérez PAS ce produit comme un indicateur de tension.
- Products rated only for basic insulation, must be installed on insulated conductors. / Les produits n’étant conçus que pour une isolation nominale, doivent être installés sur des conducteurs isolés.
- Replace all doors, covers and protective devices before powering the equipment. / Replacez toutes les portes, tous les capots et dispositifs de protection avant de mettre l’équipement sous tension.
- This product must be installed inside a suitable fire and electrical enclosure. / Cet appareil doit être installé à l’intérieur d’une armoire offrant une protection contre les risques électriques et d’incendie.
- This product is not intended for life or safety applications. / Ce produit n’est pas conçu pour les applications de sécurité.

Failure to follow these instructions will result in death or serious injury. / Le non-respect de ces instructions est susceptible d’entraîner la mort ou des blessures graves.

WARNING / AVERTISSEMENT

RISK OF INJURY OR EQUIPMENT DAMAGE / RISQUE DE BLESSURE OU DE DÉTÉRIORATION DE L’ÉQUIPEMENT

- Do not apply current transformers to circuits having a phase-to-phase voltage greater than their voltage rating unless adequate additional insulation is applied between the primary conductor and the current transformers. / N’utilisez pas ces TC sur des circuits dont la tension entre phases est supérieure à la tension nominale indiquée, sauf si une isolation supplémentaire adéquate a été ajoutée entre le conducteur primaire et les transducteurs de courant.
- To reduce the risk of electric shock, always open or disconnect circuit from power-distribution system (or service) of building before installing of servicing current transformers. / Pour réduire le risque d’électrocution, toujours ouvrir ou déconnecter le circuit du système de distribution électrique (ou du service) du bâtiment avant toute installation ou intervention sur des transformateurs de courant.
- The current transformers may not be installed in equipment where they exceed 75 percent of the wiring space of any cross-sectional area within the equipment. / Les transformateurs de courant ne doivent pas être installés dans un équipement où ils dépasseraient 75 % de l’espace de câblage d’une section de l’équipement.
- Restrict installation of current transformer in an area where it would block ventilation openings. / Éviter l’installation du transformateur de courant dans un emplacement où il bloquerait les ouvertures d’aération.
- Restrict installation of current transformer in area of breaker arc venting. / Éviter l’installation du transformateur de courant dans une zone d’échappement d’arc électrique d’organe de coupure.
- Secure current transformer and route conductors so that they do not directly contact live terminals or bus (optional). / Fixer le transformateur de courant en position et faire passer les conducteurs de sorte qu’ils ne soient pas en contact direct avec les bornes sous tension ni avec le bus (facultatif).

Failure to follow these instructions may result in injury, fire or equipment damage. / Le non-respect de ces instructions peut entraîner un risque de blessure, d’incendie ou de détérioration de l’équipement.

Schneider Electric assumes no responsibility for damage of equipment or personal injury caused by products operated on circuits above their published ratings.

2 Dimensions

NOTE: All dimensions are in mm (For inch conversion: 1 inch = 25.4 mm).

NOTE: Refer to section 5 for detailed commercial reference information.

split-core

METSECTLV1005U

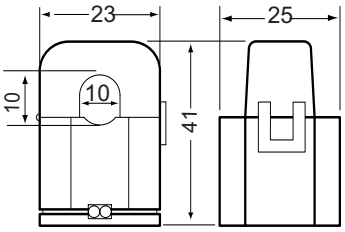

METSECTLV1010U

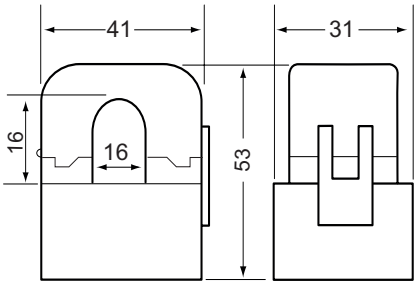

METSECTLV1020U

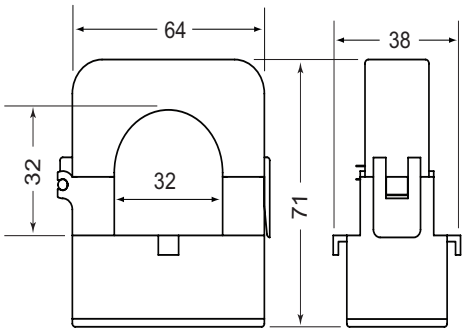

100 - 400 Amp

mm (in)

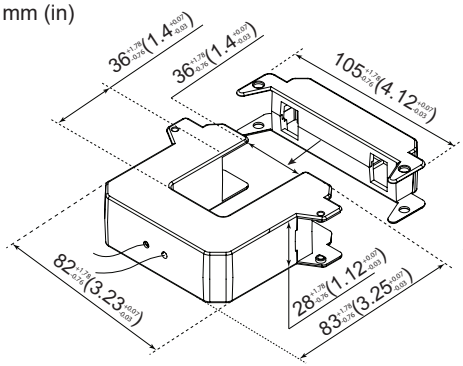

600 - 800 Amp

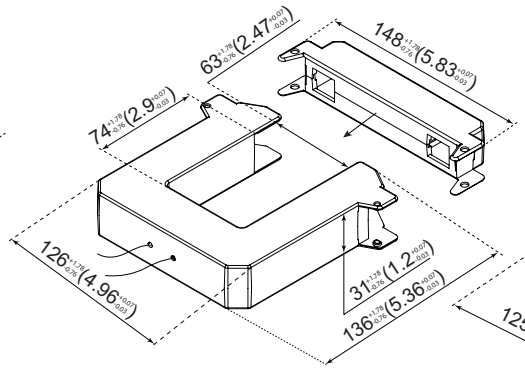

800 - 2400 Amp

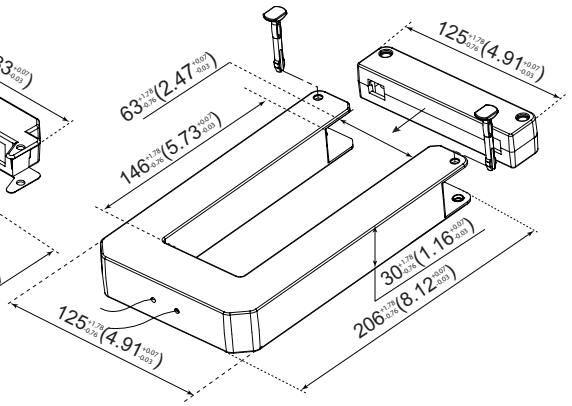

solid-core

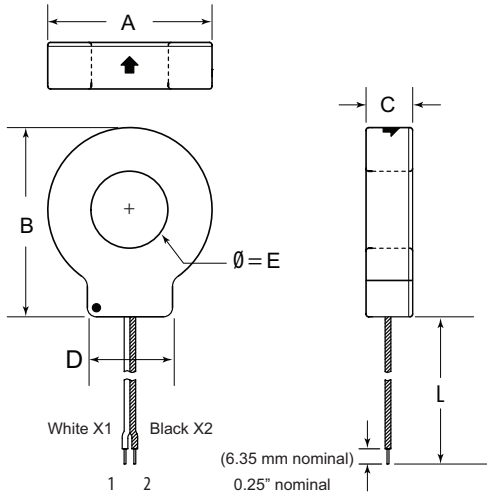

Model	L	A	B	C	D	E
METSECTLV10005U	6' (1.8 m)	1.3" (33 mm)	1.5" (38 mm)	0.7" (18 mm)	0.8" (20 mm)	0.4" (10 mm)
METSECTLV10010U						
METSECTLV25020U	6' (1.8 m)	2.3" (58 mm)	2.6" (66 mm)	0.7" (18 mm)	1.2" (31 mm)	1.0" (25 mm)
METSECTLV31040U	6' (1.8 m)	2.8" (71 mm)	3.2" (81 mm)	1.0" (25 mm)	1.4" (36 mm)	1.22" (31 mm)

3 CT principle

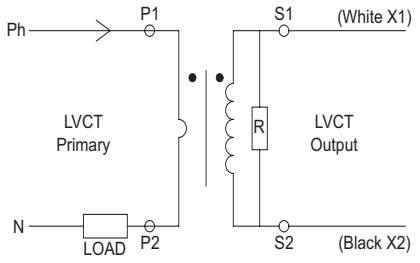

4 Recommendation for CT Mounting

Image 1

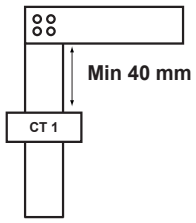

Image 2

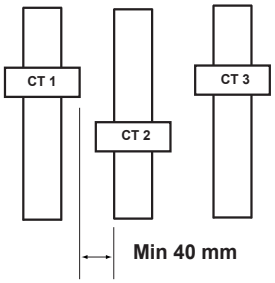

Image 1 (Refer **note1 on Page no 3)** and **Image 2** (Refer **note2 on Page no 3)**

5 CT description

CT with let-through primary	CT internal type	Internal profile type and Dimension in mm		Ip/0.333 V rating (A)*	Accuracy class	Rated short time thermal current (Ith) kA	CT Commercial reference
UL2808 split-core CT							
	Small			100	1	10.4	METSECTLV2010U
				200	1	10.8	METSECTLV2020U
				300	1	10	METSECTLV2030U
				400	1	13.8	METSECTLV2040U
	Medium	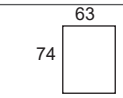		600	1	20.6	METSECTLV3060U
				800	1	35	METSECTLV3080U
	Large	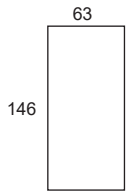		800	1	35	METSECTLV4080U
				1000	1	34	METSECTLV4100U
				1200	1	41	METSECTLV4120U
				1600	1	87	METSECTLV4160U
				2000	1	109	METSECTLV4200U
				2400	1	105	METSECTLV4240U
split-core CT Micro							
	Micro			50	1	0.5	METSECTLV1005U
		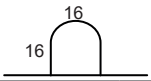		100	1	1	METSECTLV1010U
		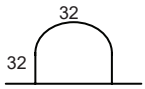		200	1	2	METSECTLV1020U
solid-core CT Micro							
	Micro	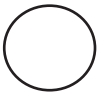	10	50	0.5	0.5	METSECTLV10005U
				100	0.5	1	METSECTLV10010U
			25	200	0.5	2	METSECTLV25020U
			31	400	0.5	4	METSECTLV31040U

* Maximum rated current (Imax) is 1.2 times of the primary current (Ip).

6 Installation

Split-Core

1. Turn off and lock out power to the primary circuit before installing these current transformers.
2. Use a properly rated voltage sensing device to confirm that power is off.
3. Connect the current transformers output leads to the meter inputs. The white wire is the X1 lead
4. Release the clasp on one side of the CT and open it on the hinge. Check the core ends on both sections of the CT to ensure there is no rust or debris in the closure areas.
5. Wrap the CT around the primary lead. A label on the product indicates the source side.
6. Close the CT until the clasp clicks into place to ensure that the contact surfaces are firmly seated.

⚠ WARNING / AVERTISSEMENT

RISK OF INJURY OR EQUIPMENT DAMAGE / RISQUE DE BLESSURE OU DE DÉTÉRIORATION DE L'ÉQUIPEMENT

- Secure the I-bar to U-bar so that it remains in place. Close the CT with a suitable cable tie. / Fixer la barre en I à la barre en U de sorte qu'elle reste fermement en place. Fermer le TC à l'aide d'un serre-câble adapté.

Failure to follow these instructions may result in injury, fire or equipment damage. / Le non-respect de ces instructions peut entraîner un risque de blessure, d'incendie ou de détérioration de l'équipement.

Note: The CT devices have a detachable I-bar. If the I-bar is removed, re-orient it according to the markings on the core surface. For Small and medium internal type CT, It is recommended to use cable tie between I-bar to the CT Housing. Large internal type CT have a push-pin to secure the I-bar and no cable tie is required.

Note 1: To install CT in Elbow joint of the busbars, it is recommended to separate them at a minimum of 40 mm (1.57 in) rating from 1000 to 3000 A CT. (Refer Image 1)

Note 2: To reduce magnetic interference between CT on adjacent busbars, it is recommended to separate them at a minimum of 40 mm (1.57 in) rating from 1000 to 3000 A CT. (Refer Image 2)

7. Reconnect power to the panel.

Solid-Core

1. Turn off and lock out power to the primary circuit before installing these current transformers.
2. Use a properly rated voltage sensing device to confirm that power is off.
3. Connect the current transformers output leads to the meter inputs. The white wire is the X1 lead.
4. Route the primary conductor through the center of the CT and complete the conductor connections. A label on the product indicates the source side.
5. Reconnect power to the panel.

7 Specifications

Type	Split-Core	Micro Split-Core	Micro Solid-Core
Output at Rated Current	0.333 VAC	0.333 VAC	0.333 VAC
Accuracy	Class 1 as per IEC 61869-2.	Class 1 as per IEC 61869-2.	Class 0.5 as per IEC 61869-2.
Frequency	50/60 Hz ± 3	50/60 Hz ± 3	50/60 Hz ± 3
Leads	16 AWG Twisted pair, 8 ft.(2.4 m). standard length	18 AWG Twisted pair, 6 ft. (1.8 m) standard length	18 AWG Twisted pair, 6 ft. (1.8 m) standard length
Dielectric Strength	5400 Vrms, 60 Hz, 60 Seconds.	METSECTLV1005U : 2210 Vrms, 60 Hz, 5 Seconds. All other split-core models : 3310 Vrms 60 Hz, 5 Seconds.	3310 Vrms, 60 Hz, 5 Seconds.
Rated dynamic current (Idyn)	2.5 Ith	2.5 Ith	2.5 Ith
Operating Temperature Range	-15° to 60 °C (5° to 140 °F)	0° to 70 °C (32 to 158 °F)	-40° to 85 °C (-40° to 185 °F)
Storage Temperature Range	-40° to 70 °C (-40° to 158 °F)	-40° to 105 °C (-40 to 221 °F)	-50° to 105 °C (-58° to 221 °F)
Humidity Range	0-95% non-condensing	0-95% non-condensing	0-95% non-condensing
Max. Voltage L-N Sensed Conductor	600 VAC (basic insulation rating)	METSECTLV1005U : 250 VAC (basic insulation rating) All other split-core models : 600 VAC (basic insulation rating)	600 VAC (basic insulation rating)
Altitude of Operation	2000 m max.	3000 m max.	3000 m max.
Mounting Location	Not suitable for wet locations. For indoor use only.	Not suitable for wet locations. For indoor use only.	Not suitable for wet locations. For indoor use only.
Approvals	UL2808	UL2808	UL2808
Installation Category	Cat III, pollution degree 2	Cat III, pollution degree 2	Cat III, pollution degree 2

China ROHS Certificate

The “Administrative Measures for the Restriction of Hazardous Substances in Electric Appliance and Electronic Products” requires this document to be shipped with all UL2808 LVCT products to the People’s Republic of China. Purchasers in other countries may disregard.

Les “Administrative Measures for the Restriction of Hazardous Substances in Electric Appliances and Electronic Products” exige que ce document soit transporté avec tous les produits de UL2808 LVCT en République Populaire de Chine. Les acheteurs des autres pays peuvent le négliger.

Las “Administrative Measures for the Restriction of Hazardous Substances in Electric Appliances and Electronic Products” requiere que este documento sea enviado con todos los productos UL2808 LVCT a la República Popular de China. Los usuarios en otros países pueden ignorar este documento.

Product/ Produit/ Producto: UL2808 LVCT METSECTxx
产品系列：电力量度器仪及配件

部件名称 ／ Part Name	产品中有毒有害物质或元素的名称及含量 ／ Hazardous Substances					
	铅 (Pb)	汞 (Hg)	镉 (Cd)	六价铬 (Cr(VI))	多溴联苯 (PBB)	多溴二苯醚 (PBDE)
金属部件 ／ Metal parts	O	O	O	O	O	O
塑料部件 / Plastic parts	O	O	O	O	O	O
电子线路板 / PCBA	X	O	O	O	O	O

本表格依据SJ/T11364的规定编制。

O = 表示该有毒有害物质在该部件所有均质材料中的含量均在 SJ/T11363-2006 标准规定的限量要求以下.

X = 表示该有毒有害物质至少在该部件的某一均质材料中的含量超出SJ/T11363-2006标准规定的限量要求.

This table is made according to SJ/T 11364.
O: indicates that the concentration of hazardous substance in all of the homogeneous materials for this part is below the limit as stipulated in GB/T 26572.
X: indicates that concentration of hazardous substance in at least one of the homogeneous materials used for this part is above the limit as stipulated in GB/T 26572.

Notices

Read these instructions carefully and look at the equipment to become familiar with the device before trying to install, operate, service or maintain it.

Electrical equipment should be installed, operated, serviced and maintained in restricted access locations only by qualified personnel. No responsibility is assumed by Schneider Electric for any consequences arising out of the use of this material. A qualified person is one who has skills and knowledge related to the construction, installation, and operation of electrical equipment and has received safety training to recognize and avoid the hazards involved.

Schneider Electric is the trademark or registered trademark of Schneider Electric in France, the USA and other countries.

•This product must be installed, connected and used in compliance with prevailing standards and/or installation regulations.

•If this product is used in a manner not specified by the manufacturer, the protection provided by the product may be impaired.

•The safety of any system incorporating this product is the responsibility of the assembler/installer of the system.

As standards, specifications and designs change from time to time, always ask for confirmation of the information given in this publication.

Schneider Electric
35 rue Joseph Monier
92500 Rueil Malmaison
France
+33 (0) 1 41 29 70 00
www.se.com

Schneider Electric Limited
Stafford Park 5
Telford TF3 3BL
United Kingdom

Z205398-0K
2023 Schneider Electric. All rights reserved.
12/2023