# Product data sheet

Specifications

## discrete mixed IO module, Modicon X80, 16 inputs, 16 outputs, 24V DC positive

BMXDDM3202K

## Main

| | |
|---|---|
| **Range of product** | Modicon X80 |
| **Product or component type** | Discrete I/O module |
| **Discrete input number** | 16 |
| **Input type** | Current sink (logic positive) |
| **Discrete input voltage** | 24 V DC, discrete input logic: positive |
| **Discrete input current** | 2.5 mA |
| **Discrete output number** | 16 |
| **Discrete output type** | Solid state |
| **Discrete output voltage** | 24 V 19...30 V DC |
| **Discrete output current** | 0.1 A |

## Complementary

| | |
|---|---|
| **Input compatibility** | With 2-wire/3-wire proximity sensors conforming to IEC 60947-5-2<br>With 2-wire/3-wire proximity sensors conforming to IEC 61131-2 Type 1 |
| **Sensor power supply** | 19...30 V |
| **Current state 1 guaranteed** | >= 2 mA |
| **Current state 0 guaranteed** | <= 0.5 mA |
| **Current per channel** | 0.125 A |
| **Maximum current per module** | 3.2 A |
| **Maximum leakage current** | 0.1 mA at state 0 |
| **Maximum voltage drop** | <1.5 V at state 1 |
| **Input impedance** | 9600 Ohm |
| **Insulation resistance** | > 10 MOhm 500 V DC |
| **Power dissipation in W** | 4 W |
| **DC typical response time** | 4 ms |
| **DC maximum response time** | 7 ms |
| **Response time on output** | 1.2 ms |
| **Paralleling of outputs** | Yes : 3 maximum |
| **Typical current consumption** | 69 mA at 24 V DC<br>125 mA at 3.3 V DC |
| **Current consumption** | <= 104 mA at 24 V DC<br><= 166 mA at 3.3 V DC |
| **MTBF reliability** | 430000 H |

Disclaimer: This documentation is not intended as a substitute for and is not to be used for determining suitability or reliability of these products for specific user applications

| | |
|---|---|
| **Protection type** | 1 external fuse per group of input channel0.5 A fast blow<br>overvoltage protection on output<br>reverse polarity protection on input<br>reverse polarity protection on output |
| **Output overload protection** | With electronic circuit breaker 0.125 A < Id < 0.185 A<br>With current limiter |
| **Output overvoltage protection** | With transil diode |
| **Output short-circuit protection** | With 2 A external fuse |
| **Reverse polarity protection** | Reverse mounted diode |
| **Voltage detection threshold** | < 14 V DC preactuator fault<br>< 14 V DC sensor fault<br>> 18 V DC preactuator OK<br>> 18 V DC sensor OK |
| **Maximum tungsten load** | 1.2 W |
| **Switching frequency** | 0.5/LI² Hz |
| **Maximum overload time** | 15 ms |
| **Load impedance ohmic** | <= 220 Ohm |
| **Status LED** | 1 LED (green) module operating (RUN)<br>1 LED per channel (green) channel diagnostic<br>1 LED (red) module error (ERR)<br>1 LED (red) module I/O |
| **Net weight** | 0.11 kg |

## Environment

| | |
|---|---|
| **IP degree of protection** | IP20 |
| **Directives** | 2014/35/EU - low voltage directive<br>2014/30/EU - electromagnetic compatibility |
| **Dielectric strength** | 1500 V AC at 50/60 Hz 1 minute, output/ground<br>1500 V AC at 50/60 Hz 1 minute, output/internal logic<br>1500 V AC at 50/60 Hz 1 minute, primary/secondary<br>500 V DC 1 minute, between group of inputs and outputs |
| **Vibration resistance** | 3 gn |
| **Shock resistance** | 30 gn |
| **Ambient air temperature for storage** | -40…85 °C |
| **Ambient air temperature for operation** | 0…60 °C |
| **Relative humidity** | 5…95 % at 55 °C without condensation |
| **Operating altitude** | 0...2000 m<br>2000...5000 m with derating factor |

## Packing Units

| | |
|---|---|
| **Unit Type of Package 1** | PCE |
| **Number of Units in Package 1** | 1 |
| **Package 1 Height** | 5.500 cm |
| **Package 1 Width** | 11.500 cm |
| **Package 1 Length** | 11.700 cm |
| **Package 1 Weight** | 136.000 g |
| **Unit Type of Package 2** | S02 |
| **Number of Units in Package 2** | 15 |

| | |
|---|---|
| **Package 2 Height** | 15.000 cm |
| **Package 2 Width** | 30.000 cm |
| **Package 2 Length** | 40.000 cm |
| **Package 2 Weight** | 2.355 kg |

## Contractual warranty

| | |
|---|---|
| **Warranty** | 18 months |

## Environmental Data

Schneider Electric aims to achieve Net Zero status by 2050 through supply chain partnerships, lower impact materials, and circularity via our ongoing “Use Better, Use Longer, Use Again” campaign to extend product lifetimes and recyclability.

Environmental Data explained >

How we assess product sustainability >

### Environmental footprint

| | |
|---|---|
| Total lifecycle Carbon footprint | 38 |
| Environmental Disclosure | Product Environmental Profile |

## Use Better

### Materials and Substances

| | |
|---|---|
| Packaging made with recycled cardboard | Yes |
| Packaging without single use plastic | Yes |
| EU RoHS Directive | Pro-active compliance (Product out of EU RoHS legal scope) |
| REACh Regulation | REACh Declaration |
| California proposition 65 | WARNING: This product can expose you to chemicals including: Lead and lead compounds, which is known to the State of California to cause cancer and birth defects or other reproductive harm. For more information go to www.P65Warnings.ca.gov |

## Use Again

### Repack and remanufacture

| | |
|---|---|
| End of life manual availability | End of Life Information |
| Take-back | No |

## Dimensions Drawings

### Modules Mounted on Racks

#### Dimensions

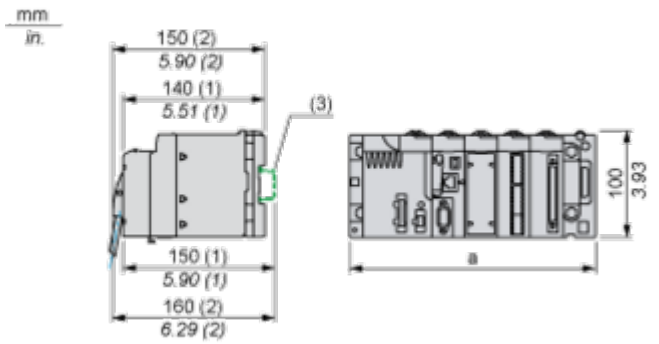


**(1)** With removable terminal block (cage, screw or spring).
**(2)** With FCN connector.
**(3)** On AM1 ED rail: 35 mm wide, 15 mm deep. Only possible with BMXXBP0400/0400H/0600/0600H/0800/0800H rack.

| Rack references | a in mm | a in in. |
|---|---|---|
| BMXXBP0400 and BMXXBP0400H | 242.4 | 09.54 |
| BMXXBP0600 and BMXXBP0600H | 307.6 | 12.11 |
| BMXXBP0800 and BMXXBP0800H | 372.8 | 14.68 |
| BMXXBP1200 and BMXXBP1200H | 503.2 | 19.81 |

Connections and Schema

## Connecting the Module

### Input Circuit Diagram

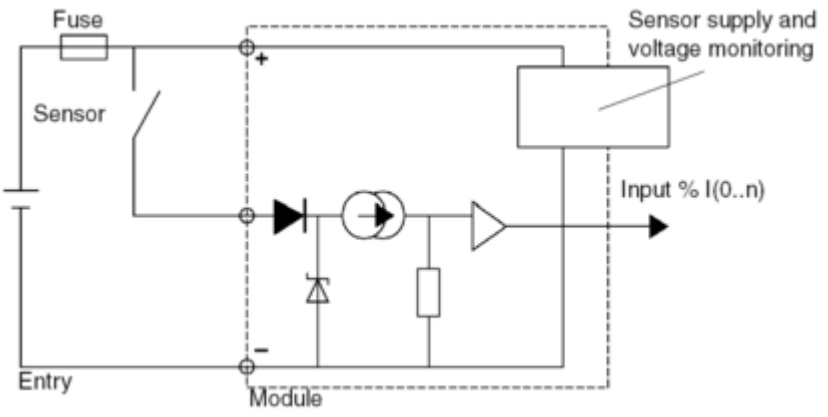


### Output Circuit Diagram

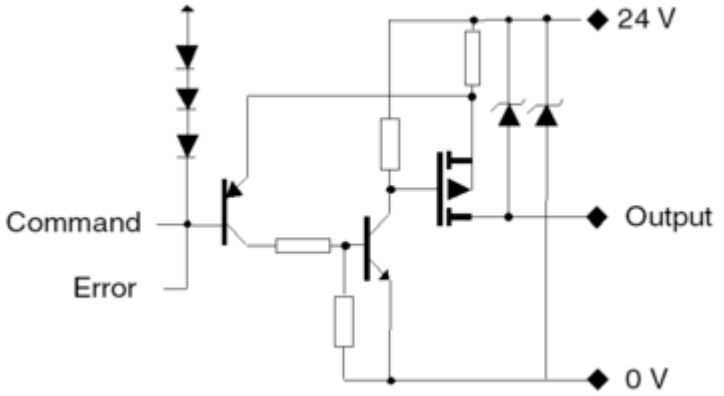


### Module Connection

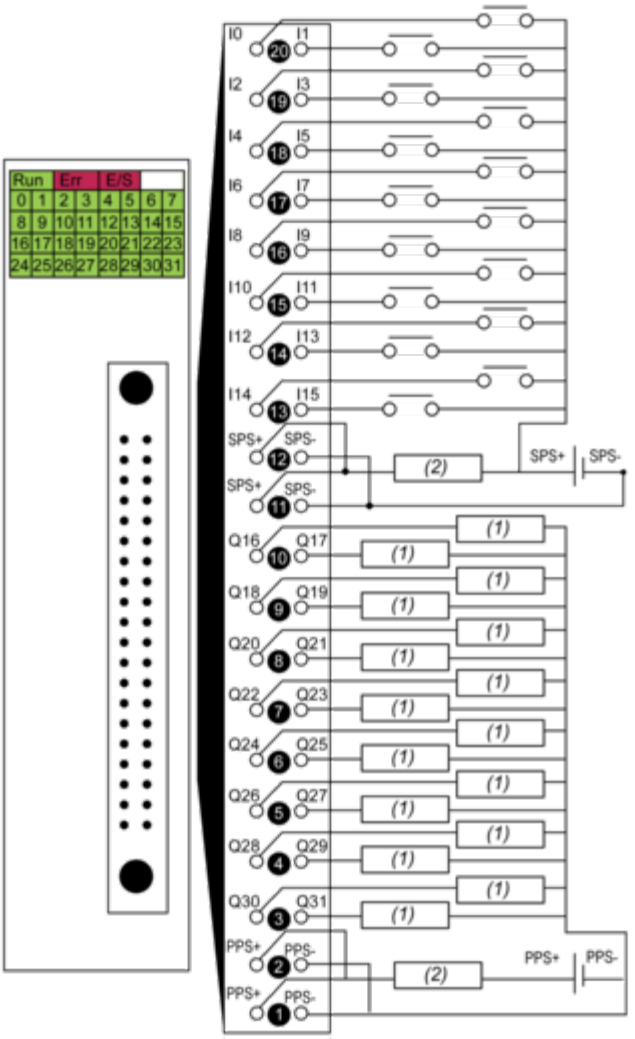


**(1)** pre-actuator
**(2)** fuse
**power supply** 24 VDC
**input fuse** fast blow fuse of 0.5 A
**output fuse** fast blow fuse of 2 A
**SPS** sensor power supply
**PPS** pre-actuator power supply

Image of product / Alternate images

**Alternative**

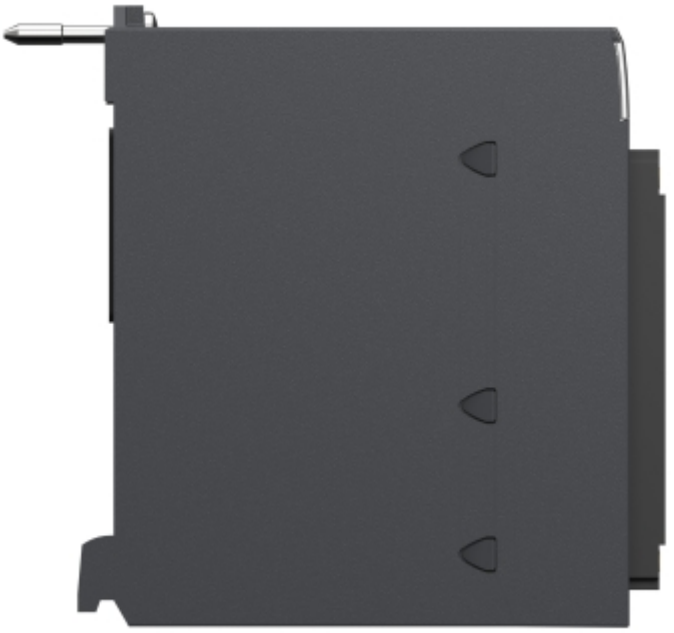

DDM3202K
RUN
ERR
I/O
00 01 02 03 04 05 06 07
08 09 10 11 12 13 14 15
16 17 18 19 20 21 22 23
24 25 26 27 28 29 30 31
00
1
15
16
Q
31

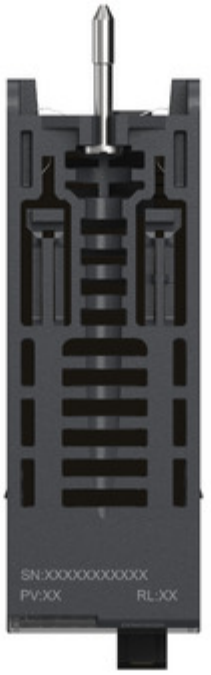
SN:XXXXXXXXXXX
PV:XX
RL:XX