Harmony ST6

User Manual

EIO0000003527_03
07/2022

www.se.com

Legal Information

The Schneider Electric brand and any trademarks of Schneider Electric SE and its subsidiaries referred to in this guide are the property of Schneider Electric SE or its subsidiaries. All other brands may be trademarks of their respective owners.

This guide and its content are protected under applicable copyright laws and furnished for informational use only. No part of this guide may be reproduced or transmitted in any form or by any means (electronic, mechanical, photocopying, recording, or otherwise), for any purpose, without the prior written permission of Schneider Electric.

Schneider Electric does not grant any right or license for commercial use of the guide or its content, except for a non-exclusive and personal license to consult it on an "as is" basis. Schneider Electric products and equipment should be installed, operated, serviced, and maintained only by qualified personnel.

As standards, specifications, and designs change from time to time, information contained in this guide may be subject to change without notice.

To the extent permitted by applicable law, no responsibility or liability is assumed by Schneider Electric and its subsidiaries for any errors or omissions in the informational content of this material or consequences arising out of or resulting from the use of the information contained herein.

As part of a group of responsible, inclusive companies, we are updating our communications that contain non-inclusive terminology. Until we complete this process, however, our content may still contain standardized industry terms that may be deemed inappropriate by our customers.

Table of Contents

Safety Information 5
About This Book 6
Overview 10
- Part Numbers 10
- Package Contents 10
- Certifications and Standards 11

Device Connectivity 13
- System Design 13
- Accessories 14

Parts Identification and Functions 16
- Parts Identification 16
  - Parts Identification (HMIST6200) 16
  - Parts Identification (HMIST6400) 17
  - Parts Identification (HMIST65/66/6700) 18
- LED Indications 19
  - Status LED 19
  - Ethernet LED 20

Specifications 21
- General Specifications 21
  - Electrical Specifications 21
  - Environmental Specifications 21
  - Structural Specifications 22
- Functional Specifications 24
  - Display Specifications 24
  - Touch Panel 25
  - Memory 25
  - Clock 25
- Interface Specifications 26
  - Specifications of Each Interface 26
  - Serial Interface 26

Dimensions 30
- HMIST6200 30
- HMIST6400 32
- HMIST6500 33
- HMIST6600 35
- HMIST6700 36

Installation and Wiring 39
- Installation 39
  - Precautions for Building into an End-use Product 39
  - Installation Requirements 39
  - Panel Cut Dimensions 41
  - Installation Procedure (HMIST6200) 41
  - Installation Procedure (HMIST64/65/66/6700) 45
  - Removal Procedure 47
- Wiring the Power Supply 48
  - Connecting the DC Power Cord 48
  - Power Supply Precautions 49

Grounding 51
USB Cable Clamp 52
USB Clamp Type A (1 port) 52
Isolation Unit 54
Installation Procedure 55
Maintenance 56
Regular Cleaning 56
Periodic Check Points 56
Replacing the Installation Gasket 57
Replacing the Battery 58
Replacing the Backlight 59

Safety Information

Important Information

Read these instructions carefully, and look at the equipment to become familiar with the device before trying to install, operate, service, or maintain it. The following special messages may appear throughout this documentation or on the equipment to warn of potential hazards or to call attention to information that clarifies or simplifies a procedure.

The addition of this symbol to a “Danger” or “Warning” safety label indicates that an electrical hazard exists which will result in personal injury if the instructions are not followed.

This is the safety alert symbol. It is used to alert you to potential personal injury hazards. Obey all safety messages that follow this symbol to avoid possible injury or death.

⚠ DANGER

DANGER indicates a hazardous situation which, if not avoided, **will result in** death or serious injury.

⚠ WARNING

WARNING indicates a hazardous situation which, if not avoided, **could result in** death or serious injury.

⚠ CAUTION

CAUTION indicates a hazardous situation which, if not avoided, **could result** in minor or moderate injury.

NOTICE

NOTICE is used to address practices not related to physical injury.

Please Note

Electrical equipment should be installed, operated, serviced, and maintained only by qualified personnel. No responsibility is assumed by Schneider Electric for any consequences arising out of the use of this material.

A qualified person is one who has skills and knowledge related to the construction and operation of electrical equipment and its installation, and has received safety training to recognize and avoid the hazards involved.

About This Book

Document Scope

This manual describes how to use this product.

Validity Note

This documentation is valid for this product.

The technical characteristics of the devices described in the present document also appear online. To access the information online, go to the Schneider Electric home page.
www.se.com

The characteristics presented in the present document should be the same as those that appear online. In line with our policy of constant improvement we may revise content over time to improve clarity and accuracy. In the event that you see a difference between the document and online information, use the online information as your reference.

Registered Trademarks

Microsoft® and Windows® are registered trademarks of Microsoft Corporation in the United States and/or other countries.

Product names used in this manual may be the registered trademarks owned by the respective proprietors.

Related Documents

You can download the manuals related to this product, such as the software manual, from our website.
www.se.com

Product Related Information

If the equipment is used in a manner not specified by the manufacturer, the protection provided by the equipment may be impaired.

⚠⚠ DANGER

HAZARD OF ELECTRIC SHOCK, EXPLOSION, OR ARC FLASH

- Remove all power from the device before removing any covers or elements of the system, and prior to installing or removing any accessories, hardware, or cables.
- Unplug the power cable from both this product and the power supply prior to installing or removing the product.
- Always use a properly rated voltage sensing device to confirm power is off where and when indicated.
- Replace and secure all covers or elements of the system before applying power to this product.
- Use only the specified voltage when operating this product. This product is designed to use 24 Vdc. Always check whether your device is DC powered before applying power.

Failure to follow these instructions will result in death or serious injury.

⚠ DANGER

POTENTIAL FOR EXPLOSION

- Do not use this product in hazardous environments.
- Do not connect or disconnect this product unless power has been switched off or the area is known to be non-hazardous.
- Do not attempt to install, operate, modify, maintain, service, or otherwise alter this product except as permitted in this manual.
- Confirm that the USB cable has been attached with the USB cable clamp before using the USB interface.
- Use the USB (micro-B) interface for temporary connection only during maintenance and setup of the device.

Failure to follow these instructions will result in death or serious injury.

Critical alarm indicators and system functions require independent and redundant protection hardware and/or mechanical interlocks.

When you cycle power, wait at least 10 seconds after it has been turned off. If this product is restarted too quickly, it may not operate correctly.

In the event the screen cannot be properly read, for example, if the backlight is not functioning, it may be difficult or impossible to identify a function. Functions that may present a hazard if not immediately executed, such as a fuel shut-off, must be provided independently of this product. The machine's control system design must take into account the possibility of the backlight no longer functioning and the operator being unable to control the machine or making mistakes in the control of the machine.

⚠ WARNING

LOSS OF CONTROL

- The designer of any control scheme must consider the potential failure modes of control paths and, for certain critical control functions, provide a means to achieve a safe state during and after a path failure. Examples of critical control functions are emergency stop and overtravel stop, power outage and restart.
- Separate or redundant control paths must be provided for critical control functions.
- System control paths may include communication links. Consideration must be given to the implications of unanticipated transmission delays or failures of the link.
- Observe all accident prevention regulations and local safety guidelines.
- Each implementation of this product must be individually and thoroughly tested for proper operation before being placed into service.
- The machine control system design must take into account the possibility of the backlight no longer functioning and the operator being unable to control the machine, or making errors in the control of the machine.

Failure to follow these instructions can result in death, serious injury, or equipment damage.

For additional information, refer to NEMA ICS 1.1 (latest edition), "Safety Guidelines for the Application, Installation, and Maintenance of Solid State Control" and to NEMA ICS 7.1 (latest edition), "Safety Standards for Construction and Guide for Selection, Installation and Operation of Adjustable-Speed Drive Systems" or their equivalent governing your particular location.

⚠ WARNING

UNINTENDED EQUIPMENT OPERATION

- The application of this product requires expertise in the design and programming of control systems. Only persons with such expertise should be allowed to program, install, alter, and apply this product.
- Follow all applicable safety standard, local regulations and directives.

Failure to follow these instructions can result in death, serious injury, or equipment damage.

⚠ WARNING

UNINTENDED EQUIPMENT OPERATION

- Do not use this product as the only means of control for critical system functions such as motor start/stop or power control.
- Do not use this equipment as the only notification device for critical alarms, such as device overheating or overcurrent.
- Use only the software provided with this product. If you use other software, please confirm its operation and safety before use.

Failure to follow these instructions can result in death, serious injury, or equipment damage.

The following characteristics are specific to the LCD panel and are considered normal behavior:

- LCD screen may show unevenness in the brightness of certain images or may appear different when seen from outside the specified viewing angle. Extended shadows, or Crosstalk (like extended shadows) may appear on the LCD screen.
- LCD screen may contain black or white colored spots (dead pixels) and the color display may seem to change as time elapses.
- When experiencing vibrations within a certain frequency range and vibration acceleration is above what is acceptable, the LCD screen may partially turn white. Once the vibration condition ends, the whitening of the screen is resolved.
- When the same image is displayed on the screen for a long period, an afterimage may appear when the image is changed.
- The panel brightness may decrease when used for a long time in an environment continuously filled with inert gas. To prevent deterioration of panel brightness, regularly ventilate the panel. For more information, please contact your local distributor.

  www.se.com

⚠ WARNING

SERIOUS EYE AND SKIN INJURY

The liquid in the LCD panel contains an irritant:

- Avoid direct skin contact with the liquid.
- Wear gloves when you handle a broken or leaking unit.
- Do not use sharp objects or tools in the vicinity of the LCD panel.
- Handle the LCD panel carefully to prevent puncture, bursting, or cracking of the panel material.
- If the panel is damaged and any liquid comes in contact with your skin, immediately rinse the area with running water for at least 15 minutes. If the liquid gets in your eyes, immediately rinse your eyes with running water for at least 15 minutes and consult a doctor.

Failure to follow these instructions can result in death, serious injury, or equipment damage.

NOTICE

REDUCTION OF SERVICE LIFE OF PANEL

Change the screen image periodically and try not to display the same image for a long period of time.

Failure to follow these instructions can result in equipment damage.

Cybersecurity Best Practices

To help keep your Schneider Electric products secure and protected, we recommend that you implement the cybersecurity best practices. Following the recommendations may help significantly reduce your company's cybersecurity risk. For the recommendations, refer to the following URL:
https://www.se.com/en/download/document/7EN52-0390/

Overview

Part Numbers

Part Number List

Series	Model name	Part number
Harmony ST6	HMIST6200	HMIST6200
	HMIST6400	HMIST6400
	HMIST6500	HMIST6500
	HMIST6600	HMIST6600
	HMIST6700	HMIST6700

NOTE: All model numbers may be followed by any letter or number.

Part Number Configuration

The following describes the configuration of part numbers.

Digit position								
1	**2**	**3**	**4**	**5**	**6**	**7**	**8**	**9**
H	M	I	(model)		(series)	(size)	(type)	
			ST		6	2: 4" 4: 7" 5: 10" 6: 12" 7: 15"	00: Standard	

Package Contents

Verify all items listed here are present in your package.
Please your local distributor immediately if you find anything damaged or missing.

⚠ WARNING

UNINTENDED EQUIPMENT OPERATION

Do not use damaged products or accessories.

Failure to follow these instructions can result in death, serious injury, or equipment damage.

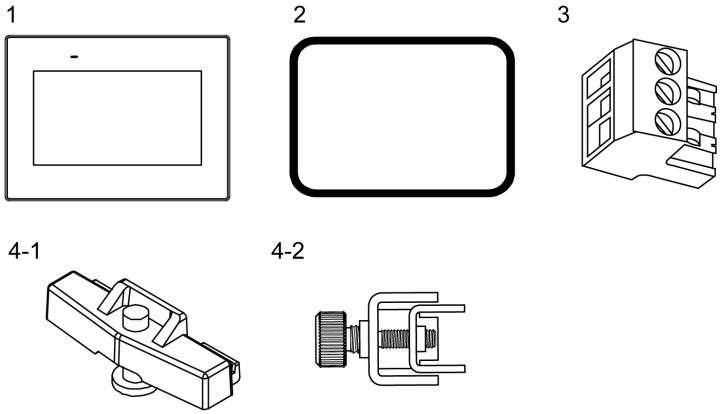

1 HMIST6•00 x 1

2 Installation gasket (attached to this product) x 1

3 DC power supply connector x 1

4-1 Installation fasteners for HMIST6200 x 2

4-2 Installation fasteners for HMIST64/65/6600 x 4, HMIST6700 x 6

5 Quick reference guide x 1

Product Revision and QR Code for Manual

You can identify the product version (PV), revision level (RL), and the software version (SV) from the product label.

You can also check the contents of this manual by using the QR code on the product label. Confirm the location of the QR code below and refer to the manual.

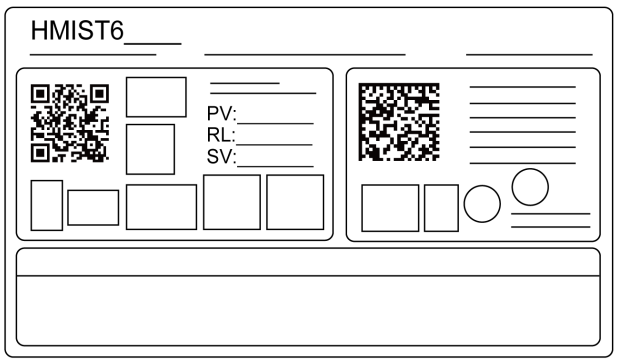

Certifications and Standards

The certifications and standards listed below may include those that are not yet acquired. Please check the product marking and the following URL for the latest acquisition status.
www.se.com

Agency Certifications

- Underwriters Laboratories Inc., UL 61010-2-201 and CSA C22.2 No.61010-2-201, Industrial Control Equipment

Compliance Standards

Europe:

CE

- Directive 2014/30/EU (EMC: EN 61131-2)

Australia, New Zealand:

- RCM

Korea:

- KC

Hazardous Substances

This product is designed to be compliant with the following environmental regulations, even if the product may not fall directly in the scope of the regulation:

- RoHS, Directive 2011/65/EU and 2015/863/EU
- RoHS China, Standard GB/T 26572
- REACH regulation EC 1907/2006

End of Life (WEEE)

The product contains electronic boards. It must be disposed of in specific treatment channels. The product contains cells and/or storage batteries which must be collected and processed separately when they have run out and at the end of product life (Directive 2012/19/EU).

Refer to Maintenance, page 56 when extracting cells and batteries from the product. These batteries do not contain a weight percentage of heavy metals over the threshold notified by European Directive 2006/66/EC.

KC Markings

기종별	사용자안내문
A급 기기 (업무용 방송통신기자재)	이 기기는 업무용(A급) 전자파적합기기로서 판매자 또는 사용자는 이 점을 주의하시기 바라며, 가정외의 지역에서 사용하는 것을 목적 으로 합니다.

Device Connectivity

System Design

This section describes the system configuration with this product and peripheral equipment.

NOTE: The number of interfaces, such as serial and Ethernet interfaces, varies depending on the model. Refer to Parts Identification, page 16.

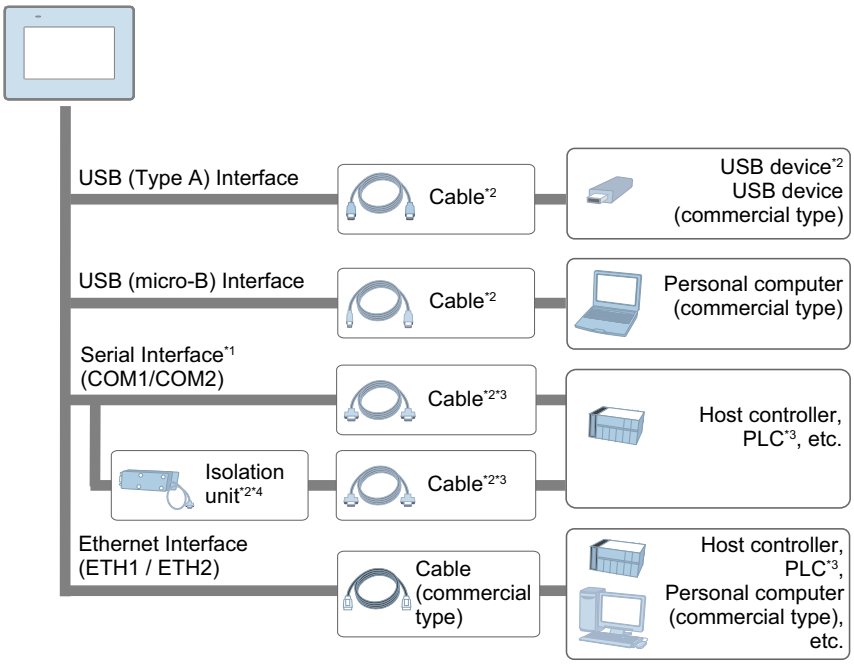

*1 In order to use this as an isolation port, Isolation Unit is required. To use RS-232C isolation unit, set the #9 pin of the COM port to VCC.

*2 Refer to Accessories, page 14.

*3 For information on how to connect controllers and other types of equipment, refer to the corresponding device driver manual of your screen editing software.

*4 HMIST6200 is not supported.

To use this product, transferring project data from the screen editing software is required. For details about transfer, refer to the software manual.
When transferring using the USB (micro-B) interface, connect cables in the following order:

1. Attach the transfer cable to the USB (micro-B) interface of this product.
2. Attach the power cable to this product, then connect the power cable to an external power source.
3. Connect the transfer cable to the computer.

⚠ WARNING

UNINTENDED EQUIPMENT OPERATION

- Do not connect the product to the computer with the USB (micro-B) cable unless the product is powered by the power cable.
- Remove the USB (micro-B) cable before communicating with the host controller and other types of equipment.

Failure to follow these instructions can result in death, serious injury, or equipment damage.

Accessories

For host controllers and connection cables, refer to the corresponding device driver manual of your screen editing software.

Product name	Product number	Description
Serial interface		
RJ-45 to D-Sub 25 pin Conversion Cable	XBTZG939	Connects a D-Sub 25-pin cable to this product (RJ-45).
9-pin to 25-pin RS-232C Conversion Cable	XBTZG919	Connects a standard RS-232C cable (D-Sub 25-pin socket) to this product (D-Sub 9-pin plug).
COM Port Conversion Adapter	XBTZGCOM1	Connects optional RS-422 communication items to serial interface (RS-232C).
RS-232C Isolation Unit	XBTZGI232	Connects a host controller to this product and provides isolation (RS-232C and RS-422 are switchable).
RS-485 Isolation Unit	XBTZGI485	Connects a host controller to this product with isolation.
USB (Type A) interface		
USB Front Cable	XBTZGUSB	Extension cable that attaches USB interface to front panel.
USB Clamp Type A (1 port)	HMIZGCLP1	Clamp to prevent disconnection of USB cable (USB Type A, 1 port, 5 clamps/set).
USB (micro-B) interface		
USB Transfer Cable	HMIZG936	Cable for transferring screen data from a PC (USB Type A) to this product (USB micro-B).
USB (micro-B) Front Cable	HMIZSUSBB2	Extension cable that attaches USB interface to front panel.
Others		
Screen Protection Sheet	HMIZD66W	Disposable, dirt-resistant sheet for 12-inch Wide screen (5 sheets/set).
UV Protection Sheet	HMIZUV6W	Sheet to protect the display from dirt and ultraviolet light, for 12-inch Wide screen (1 sheet).
Screen Protection Sheet with UV Protection	HMIZG60W	Disposable, dirt-resistant and ultraviolet protection sheet for 4-inch Wide screen (1 sheet/set).
	HMIZG63W	Disposable, dirt-resistant and ultraviolet protection sheet for 7-inch Wide screen (1 sheet/set).
	HMIZG65W1	Disposable, dirt-resistant and ultraviolet protection sheet for 10-inch Wide screen (1 sheet/set).
	HMIZG67W	Disposable, dirt-resistant and ultraviolet protection sheet for 15-inch Wide screen (1 sheet/set).
Spring Clip	XBTZ3002	Fasteners to attach this product to the mounting surface for HMIST6200.

Maintenance Accessories

Product name		
Product number	**Supported product**	**Description**
Installation fastener		
HMIZSFIX2	HMIST6200	Installation fastener (2 pieces/set).
HMIZSFIXTF1	HMIST6400, HMIST6500, HMIST6600, HMIST6700	Installation fastener (2 pieces/set).
Installation gasket		
HMIZS51W1	HMIST6200	Provides dust and moisture resistance when this product is installed into a solid panel (1 piece).
HMIZS53W1	HMIST6400	
HMIZS55W1	HMIST6500	
HMIZS56W1	HMIST6600	
HMIZS57W1	HMIST6700	
DC power supply connector		
XBTZGPWS1	All	Connector to connect DC power supply cables.
Battery for data backup		
HMIZSBA1	All	Primary battery for memory and time data backup (1 piece).

Parts Identification and Functions

Parts Identification

Parts Identification (HMIST6200)

Front	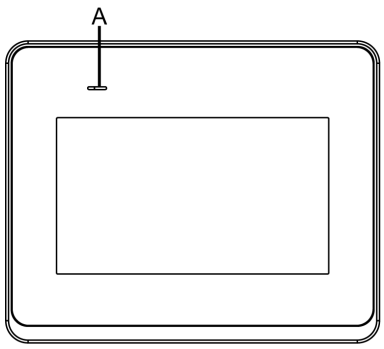
Top	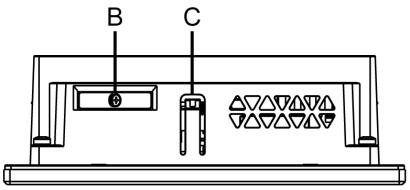
Bottom	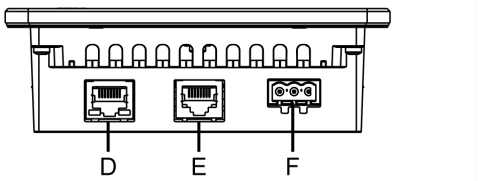
Rear	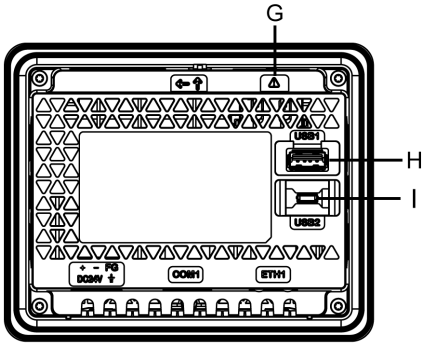

A: Status LED

B: Battery slot

C: Hook

D: Ethernet interface (ETH1)

E: Serial interface (RJ-45, RS-232C/485) (COM1)

F: Power plug connector

G: Safety alert symbol[*1]

H: USB (Type A) interface

I: USB (micro-B) interface

*1 Identifies the safety messages about the battery in Replacing the Battery, page 58

⚠WARNING

UNINTENDED EQUIPMENT OPERATION

- Do not connect the product to the computer with the USB (micro-B) cable unless the product is powered by the power cable.
- Remove the USB (micro-B) cable before communicating with the host controller and other types of equipment.

Failure to follow these instructions can result in death, serious injury, or equipment damage.

Parts Identification (HMIST6400)

Front	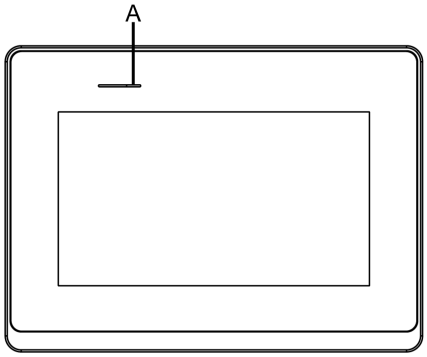
Top	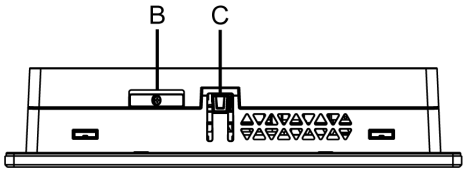
Bottom	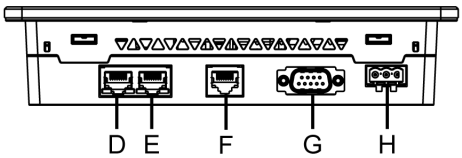
Rear	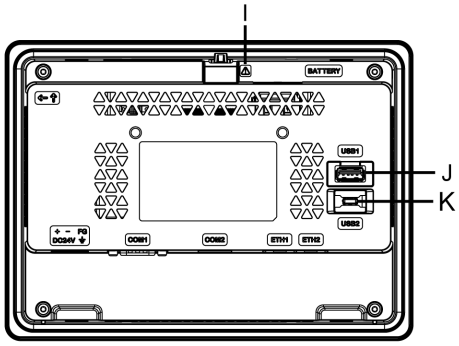

A: Status LED

B: Battery slot

C: Hook

D: Ethernet interface (ETH2)

E: Ethernet interface (ETH1)

F: Serial interface (RJ-45, RS-485) (COM2)

G: Serial interface (RS-232C) (COM1)

H: Power plug connector

I: Safety alert symbol*1

J: USB (Type A) interface

K: USB (micro-B) interface

*1 Identifies the safety messages about the battery in Replacing the Battery, page 58

⚠ WARNING

UNINTENDED EQUIPMENT OPERATION

- Do not connect the product to the computer with the USB (micro-B) cable unless the product is powered by the power cable.
- Remove the USB (micro-B) cable before communicating with the host controller and other types of equipment.

Failure to follow these instructions can result in death, serious injury, or equipment damage.

Parts Identification (HMIST65/66/6700)

NOTE: The figures below show HMIST6500.

Front	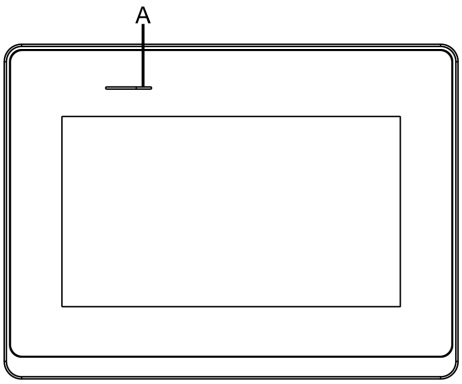
Top	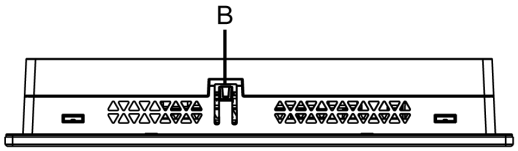

Bottom	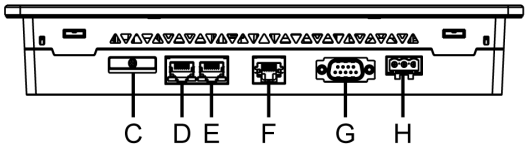
Rear	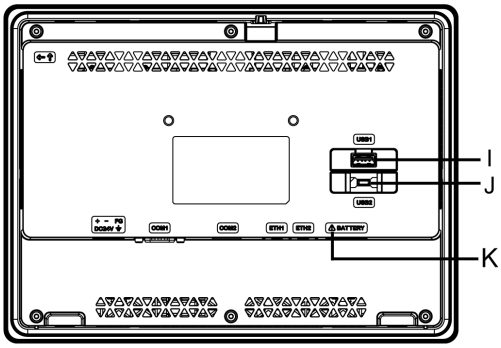

A: Status LED

B: Hook

C: Battery slot

D: Ethernet interface (ETH2)

E: Ethernet interface (ETH1)

F: Serial interface (RJ-45, RS-485) (COM2)

G: Serial interface (RS-232C) (COM1)

H: Power plug connector

I: USB (Type A) interface

J: USB (micro-B) interface

K: Safety alert symbol*1

*1 Identifies the safety messages about the battery in Replacing the Battery, page 58

⚠ WARNING

UNINTENDED EQUIPMENT OPERATION

- Do not connect the product to the computer with the USB (micro-B) cable unless the product is powered by the power cable.
- Remove the USB (micro-B) cable before communicating with the host controller and other types of equipment.

Failure to follow these instructions can result in death, serious injury, or equipment damage.

LED Indications

Status LED

After power is turned on, normal status indication by the LED is: red light > flashing orange > green light.

Color	Indicator	HMI operation
Green	ON	In operation
	Flashing once every 5 seconds	Backlight OFF (Standby Mode)
Orange	Flashing	Software starting up
Red	ON	Power is ON.
-	OFF	Power is OFF.

For other LED indications, refer to the manual of your screen editing software.

Ethernet LED

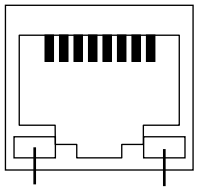

Color	Indicator	Description
Green (Link)	ON	Data transmission is available.
	OFF	No connection or error
Green (Active)	Flashing	Data transmission is occurring.
	OFF	No data transmission

Specifications

General Specifications

Electrical Specifications

Specification		HMIST6200	HMIST6400	HMIST6500
Rated input voltage		24 Vdc		
Input voltage limits		19.2...28.8 Vdc		
Voltage drop (at rated input voltage)		2 ms or less	5 ms or less	10 ms or less
Power consumption	Max	6.9 W	9 W	12.6 W
	When power is not supplied to external devices	3.6 W or less	5.5 W or less	9.6 W or less
	When screen turns off the backlight (standby mode)	2.8 W or less	3.6 W or less	4.6 W or less
	In-rush current	30 A or less		
Noise immunity		Noise voltage: 1,000 Vp-p, Pulse duration: 1 µs, Rise time: 1 ns (via noise simulator)		
Dielectric strength		1,000 Vac for 1 minute (between power terminal and FG terminal)		
Insulation resistance		500 Vdc, 10 MΩ or more (between power terminal and FG terminal)		

Specification		HMIST6600	HMIST6700
Rated input voltage		24 Vdc	
Input voltage limits		19.2...28.8 Vdc	
Voltage drop (at rated input voltage)		10 ms or less	
Power consumption	Max	18.4 W	18.5 W
	When power is not supplied to external devices	15 W or less	15 W or less
	When screen turns off the backlight (standby mode)	5.9 W or less	5.4 W or less
	In-rush current	30 A or less	
Noise immunity		Noise voltage: 1,000 Vp-p, Pulse duration: 1 µs, Rise time: 1 ns (via noise simulator)	
Dielectric strength		1,000 Vac for 1 minute (between power terminal and FG terminal)	
Insulation resistance		500 Vdc, 10 MΩ or more (between power terminal and FG terminal)	

Environmental Specifications

Use and store this product in areas that conform to the specified conditions.

NOTE: When using any of the options for this product, check the specifications for special conditions or cautions that may apply to this product.

Physical environment	
Ambient air temperature	0...50 °C (32...122 °F)
Storage temperature	-20...60 °C (-4...140 °F)
Ambient air and storage humidity	10%...90% RH (Non condensing, wet bulb temperature 39 °C [102.2 °F] or less)
Dust	0.1 mg/m^3 (10^{-7} oz/ft^3) or less (non-conductive levels)
Pollution degree	For use in Pollution Degree 2 environment
Corrosive gases	Free of corrosive gases
Atmospheric pressure (operating altitude)	800...1,114 hPa (2,000 m [6,561 ft] or lower)
Mechanical environment	
Vibration resistance	IEC/EN 61131-2 compliant 5...9 Hz Single amplitude 3.5 mm (0.14 in) 9...150 Hz Fixed acceleration: 9.8 m/s^2 X, Y, Z directions for 10 cycles (approximately 100 minutes)
Shock resistance	IEC/EN 61131-2 compliant 147 m/s^2, X, Y, Z directions for 3 times
Electrical environment	
Electrical fast transient/burst immunity	IEC 61000-4-4 2 kV: Power port (display unit) 1 kV: Signal ports
Electrostatic discharge immunity	Contact discharge method: 6 kV Air discharge method: 8 kV (IEC/EN 61000-4-2 Level 3)

⚠ CAUTION

INOPERATIVE EQUIPMENT

- Do not operate or store the product where chemicals evaporate, or where chemicals are present in the air. Chemicals refer to the following: A) Corrosive chemicals: Acids, alkalines, liquids containing salt, B) Flammable chemicals: Organic solvents.
- Do not allow water, liquids, metal, and wiring fragments to enter the panel case.

Failure to follow these instructions can result in injury or equipment damage.

Structural Specifications

	HMIST6200	HMIST6400	HMIST6500
Grounding	Functional grounding: Grounding resistance of 100 Ω or less, 2 mm^2 (AWG 14) or thicker wire, or your country's applicable standard.		
Cooling method	Natural air circulation		
Structure*1	IP65F, UL 50/50E, Type 1, Type 4X (indoor use only), Type 13 (on the front panel when properly installed in an enclosure)		
External dimensions (W x H x D)	134.5 x 108.5 x 43 mm (5.3 x 4.27 x 1.69 in)	208 x 153 x 45 mm (8.19 x 6.02 x 1.77 in)	273 x 203 x 47 mm (10.75 x 7.99 x 1.85 in)

	HMIST6200	HMIST6400	HMIST6500
Panel cut dimensions (W x H)	118.5 x 92.5 mm (4.67 x 3.64 in)*2 Panel thickness area: 1.6...5 mm (0.06...0.2 in)*3 When using spring clips: Position 1: 1.5...4 mm (0.06...0.16 in) Position 2: 4...6 mm (0.16...0.24 in)	190 x 135 mm (7.48 x 5.31 in)*2 Panel thickness area: 1.6...5 mm (0.06...0.2 in)*3	255 x 185 mm (10.04 x 7.28 in)*2 Panel thickness area: 1.6...5 mm (0.06...0.2 in)*3
Weight	0.4 kg (0.88 lb) or less	0.8 kg (1.76 lb) or less	1.3 kg (2.87 lb) or less

	HMIST6600	HMIST6700
Grounding	Functional grounding: Grounding resistance of 100 Ω or less, 2 mm^2 (AWG 14) or thicker wire, or your country's applicable standard.	
Cooling method	Natural air circulation	
Structure*1	IP65F, UL 50/50E, Type 1, Type 4X (indoor use only), Type 13 (on the front panel when properly installed in an enclosure)	
External dimensions (W x H x D)	313 x 235 x 50 mm (12.32 x 9.25 x 1.97 in)	412 x 268 x 50 mm (16.22 x 10.55 x 1.97 in)
Panel cut dimensions (W x H)	295 x 217 mm (11.61 x 8.54 in)*2 Panel thickness area: 1.6...5 mm (0.06...0.2 in)*3	394 x 250 mm (15.51 x 9.84 in)*2 Panel thickness area: 1.6...5 mm (0.06...0.2 in)*3
Weight	1.8 kg (3.97 lb) or less	2.7 kg (5.95 lb) or less

*1 The front face of this product, installed in a solid panel, has been tested using conditions equivalent to the standards shown in the specification. Even though this product's level of resistance is equivalent to these standards, oils that should have no effect on this product can possibly harm this product. This can occur in areas where either vaporized oils are present, or where low viscosity cutting oils are allowed to adhere to this product for long periods of time. If this product's front face protection sheet or cover glass peels off, these conditions can lead to the ingress of oil into this product and separate protection measures are suggested. Also, if non-approved oils are present, they may cause deformation or corrosion of the front panel's cover. Therefore, prior to installing this product, be sure to confirm the type of conditions that will be present in this product's operating environment.

If the installation gasket is used for a long period of time, or if this product and its gasket are removed from the panel, the original level of protection cannot be kept. To maintain the original protection level, be sure to replace the installation gasket regularly.

*2 For dimensional tolerance, everything +1/-0 mm (+0.04/-0 in) and R in angle are below R3 (R0.12 in).

*3 Even if the installation wall thickness is within the recommended range for the Panel Cut Dimensions, depending on the wall's material, size, and installation location of this product and other devices, the installation wall could warp. To prevent warping, the installation surface may need to be strengthened.

NOTICE

EQUIPMENT DAMAGE

- Ensure this product is not in permanent and direct contact with oils.
- Do not press on the display of this product with excessive force or with a hard object.
- Do not press on the touch panel with a pointed object, such as the tip of a mechanical pencil or a screwdriver.
- Do not expose the device to direct sunlight.

Failure to follow these instructions can result in equipment damage.

NOTICE

STORAGE AND OPERATION OUTSIDE OF SPECIFICATIONS

- Store the panel in areas where temperatures are within the product's specifications.
- Do not restrict or block this panel's ventilation slots.

Failure to follow these instructions can result in equipment damage.

NOTICE

GASKET AGING

- Inspect the gasket periodically as required by your operating environment.
- Change the gasket at least once a year, or as soon as scratches or dirt become visible.

Failure to follow these instructions can result in equipment damage.

Functional Specifications

Display Specifications

	HMIST6200	HMIST6400	HMIST6500
Display type	TFT Color LCD		
Display size	4.3"	7"	10.1"
Resolution	480 x 272 pixels	800 x 480 pixels (WVGA)	1,024 x 600 pixels (WSVGA)
Effective display area (W x H)	95.04 x 53.86 mm (3.74 x 2.12 in)	154.08 x 85.92 mm (6.07 x 3.38 in)	222.72 x 125.28 mm (8.77 x 4.93 in)
Display colors	16 million colors For details about display colors, refer to the manual of your screen editing software.		
Backlight	White LED (Not replaceable. Please contact your local distributor.)		
Backlight service life	50,000 hours or more (continuous operation at 25 °C [77 °F] before backlight brightness decreases to 25%)		
Brightness control	16 levels (Adjusted with touch panel or software)		

	HMIST6600	HMIST6700
Display type	TFT Color LCD	
Display size	12.1"	15.6"

	HMIST6600	HMIST6700
Resolution	1,280 x 800 pixels (WXGA)	1,366 x 768 pixels (FWXGA)
Effective display area (W x H)	261.12 x 163.2 mm (10.28 x 6.43 in)	344.23 x 193.54 mm (13.55 x 7.62 in)
Display colors	16 million colors For details about display colors, refer to the manual of your screen editing software.	
Backlight	White LED (Not replaceable. Please contact your local distributor.)	
Backlight service life	50,000 hours or more (continuous operation at 25 °C [77 °F] before backlight brightness decreases to 25%)	
Brightness control	16 levels (Adjusted with touch panel or software)	

Touch Panel

Touch panel type	Resistive film (analog)
Touch points	Single touch
Touch panel resolution	1,024 x 1,024
Touch panel service life	1 million times or more

The touch panel does not support two-point touch (multiple point touch). If you touch multiple points on the touch panel, it will operate as if you touched the center-point of the multiple touches.

For example, if you touch two or more points on the touch panel and at the center of the touches is a switch for a drive system, even though you did not directly touch that switch, it may function as if you did.

⚠ WARNING

UNINTENDED EQUIPMENT OPERATION

Do not touch two or more points on the touch panel.

Failure to follow these instructions can result in death, serious injury, or equipment damage.

Memory

	HMIST6200	HMIST64/65/66/6700
System memory	Flash EPROM 512 MB (operating system, project data, and other data)	Flash EPROM 1 GB (operating system, project data, and other data)
Backup memory	NVRAM 512 KB	

Clock

±65 seconds per month (deviation at room temperature and power is OFF).

Variations in operating conditions and battery life can cause clock deviations from -380 to +90 seconds per month.

For systems where this level of precision is insufficient, the user should monitor and make adjustments when required.

This product uses a primary battery for data backup of the internal clock. If the battery is depleted, the clock data will be lost. To replace the battery, refer to Replacing the Battery, page 58.

Interface Specifications

Specifications of Each Interface

	HMIST6200	HMIST64/65/66/6700
Serial interface COM1		
Asynchronous transmission	RS-232C/485	RS-232C
Data length	7 or 8 bits	
Stop bit	1 or 2 bits	
Parity	None, odd, or even	
Data transmission speed	2,400...115,200 bps, 187,500 bps (MPI)	2,400...115,200 bps
Connector	Modular jack (RJ-45)	D-Sub 9 pin (plug)
Serial interface COM2		
Asynchronous transmission	–	RS-485
Data length	–	7 or 8 bits
Stop bit	–	1 or 2 bits
Parity	–	None, odd, or even
Data transmission speed	–	2,400...115,200 bps, 187,500 bps (MPI)
Connector	–	Modular jack (RJ-45)
USB (Type A) interface		
Connector	USB 2.0 (Type A) x 1	
Power supply voltage	5 Vdc ±5%	
Maximum current supplied	500 mA	
Maximum transmission distance	5 m (16.4 ft)	
USB (micro-B) interface		
Connector	USB 2.0 (micro-B) x 1	
Maximum transmission distance	5 m (16.4 ft)	
Ethernet interface		
Standard	IEEE802.3i/IEEE802.3u, 10BASE-T/100BASE-TX	
Connector	Modular jack (RJ-45) x 1	Modular jack (RJ-45) x 2

NOTE: Use only the SELV (Safety Extra-Low Voltage) circuit to connect the serial, USB and Ethernet interfaces.

Serial Interface

Introduction

The serial interface is not isolated.

NOTE: For information on how to connect controllers and other types of equipment, refer to the corresponding device driver manual of your screen editing software.

On HMIST6200, you can switch the communication method between RS-232C and RS-485 via the software.

The SG (signal ground) and FG (frame ground) terminals are separated inside this product.

⚠⚠DANGER

ELECTRIC SHOCK

- Make a direct connection between the FG (frame ground) terminal and ground.
- Do not connect other devices to ground through the FG (frame ground) terminal of this device.
- Install all cables according to local codes and requirements. If local codes do not require grounding, follow a reliable guide such as the US National Electrical Code, Article 800.

Failure to follow these instructions will result in death or serious injury.

⚠CAUTION

LOSS OF COMMUNICATION

- Do not put excessive stress on the communication ports of all connections.
- Securely attach communication cables to the panel wall or cabinet.
- Use only D-Sub 9 pin cables with a locking tab in good condition.
- Use a RJ45 connector that has a functional locking tab.

Failure to follow these instructions can result in injury or equipment damage.

NOTE: Use within the rated current.

HMIST6200 COM1 (RS-232C/485)

RJ45 connector

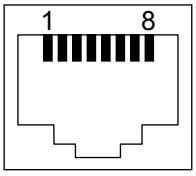

Pin No.	RS-232C/RS-485		
	Signal name	Direction	Meaning
1	RD (RXD)	Input	Receive data (RS-232C)
2	SD (TXD)	Output	Send data (RS-232C)
3	NC	–	No connection
4	D1	Input/Output	Transfer data (RS-485)
5	D0	Input/Output	Transfer data (RS-485)
6	RS (RTS)	Output	Request to send
7	NC	–	No connection

Pin No.	RS-232C/RS-485		
	Signal name	**Direction**	**Meaning**
8	SG	–	Signal ground
Shell	FG	–	Frame ground

HMIST64/65/66/6700 COM1 (RS-232C)

D-Sub 9 pin plug connector

Product side:

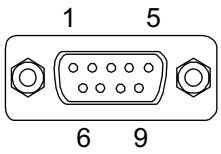

Pin No.	RS-232C		
	Signal name	**Direction**	**Meaning**
1	CD	Input	Carrier detect
2	RD (RXD)	Input	Receive data
3	SD (TXD)	Output	Send data
4	ER (DTR)	Output	Data terminal ready
5	SG	–	Signal ground
6	DR (DSR)	Input	Data set ready
7	RS (RTS)	Output	Request to send
8	CS (CTS)	Input	Send possible
9	VCC	Output	+5 Vdc ±5% Output 0.25 A*1
Shell	FG	–	Frame ground

*1 When using RS-232C pin #9, enable VCC with the software.

Recommended jack screw is #4-40 (UNC).

HMIST64/65/66/6700 COM2 (RS-485)

RJ45 connector

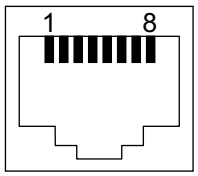

NOTE: When setting up RS-485 communication, the cable diagram for some equipment may require polarization on the terminal side. Change the setting for polarization with your screen editing software.

Pin No.	RS-485		
	Signal name	**Direction**	**Meaning**
1	NC	–	No connection
2	NC	–	No connection
3	NC	–	No connection
4	Line A	Input/Output	Transfer data (+)
5	Line B	Input/Output	Transfer data (-)
6	RS (RTS)	Output	Request to send
7	NC	–	No connection
8	SG	–	Signal ground
Shell	FG	–	Frame ground

Dimensions

HMIST6200

External Dimensions

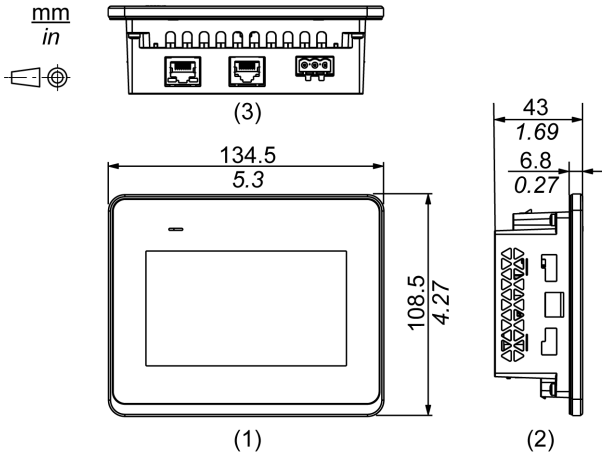

1 Front

2 Left

3 Bottom

Dimensions with Installation Fasteners

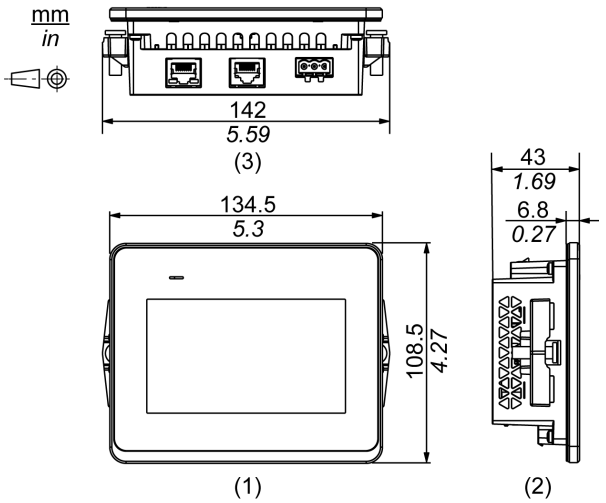

1 Front

2 Left

3 Bottom

Dimensions with Spring Clips

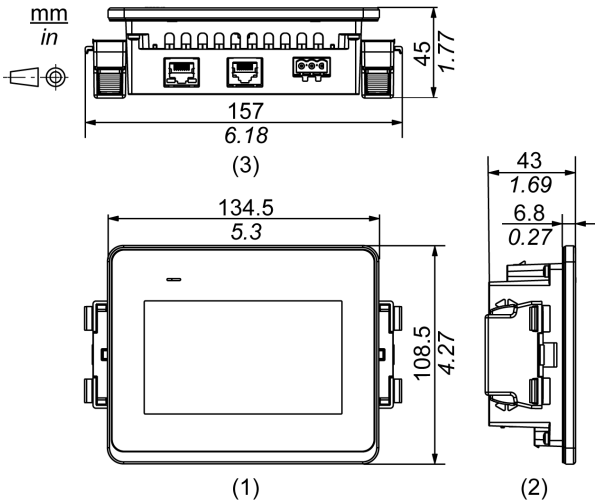

1 Front

2 Left

3 Bottom

Dimensions with Cables

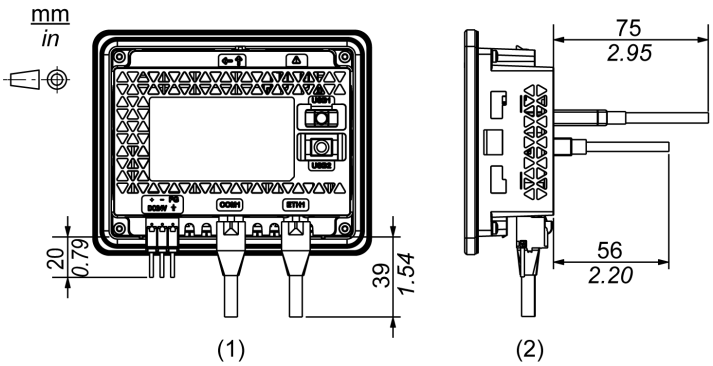

1 Rear

2 Right

NOTE: All the above values are designed with cable bending in mind. The dimensions given here are representative values depending on the type of connection cable in use. Therefore, these values are intended for reference only.

HMIST6400

External Dimensions

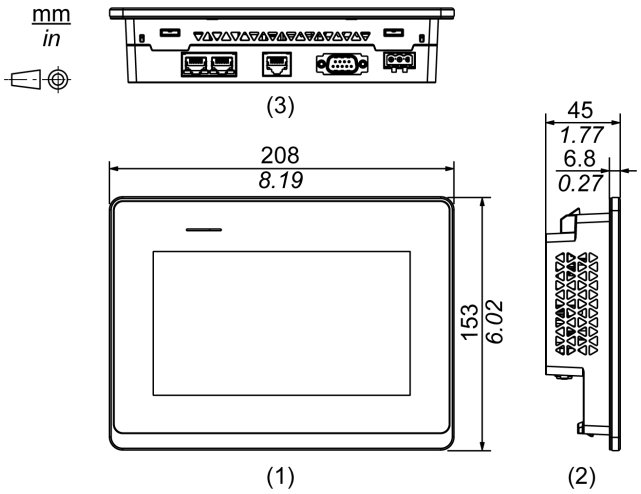

1 Front

2 Left

3 Bottom

Dimensions with Installation Fasteners

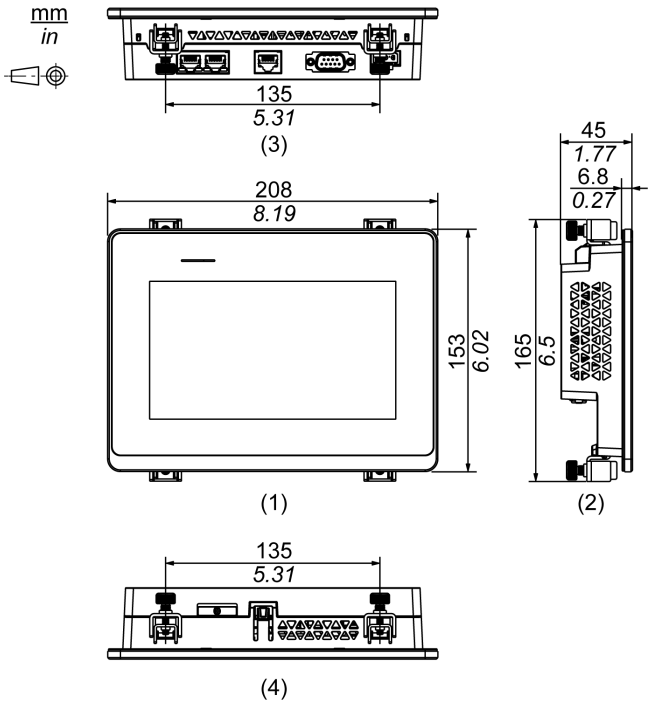

1 Front

2 Left

3 Bottom

4 Top

Dimensions with Cables

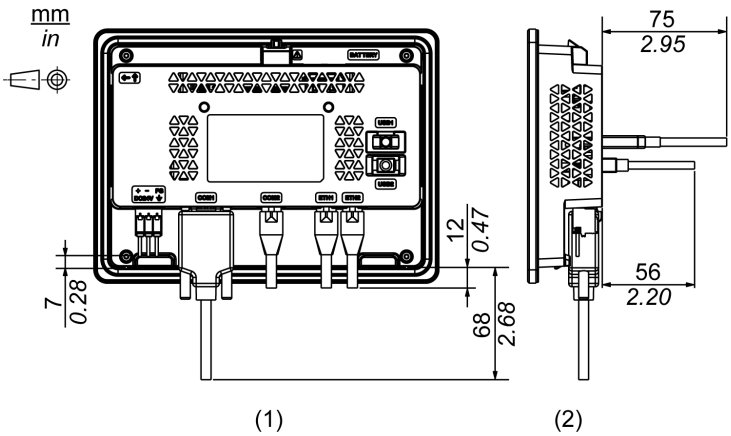

1 Rear

2 Right

NOTE: All the above values are designed with cable bending in mind. The dimensions given here are representative values depending on the type of connection cable in use. Therefore, these values are intended for reference only.

HMIST6500

External Dimensions

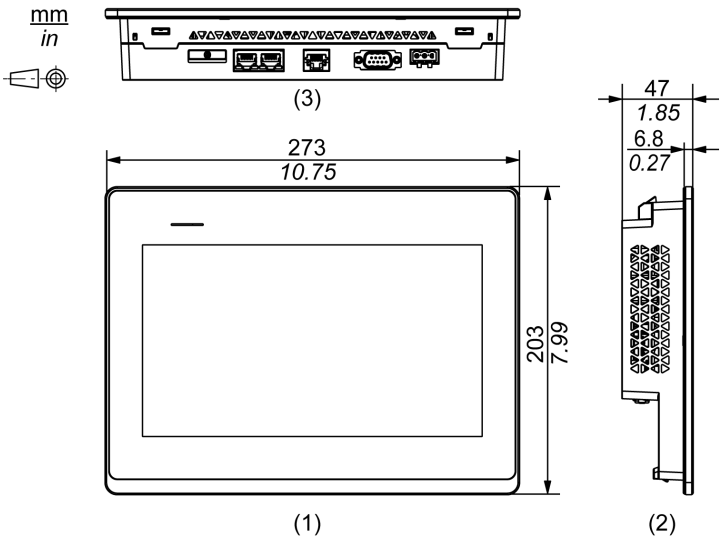

1 Front

2 Left

3 Bottom

Dimensions with Installation Fasteners

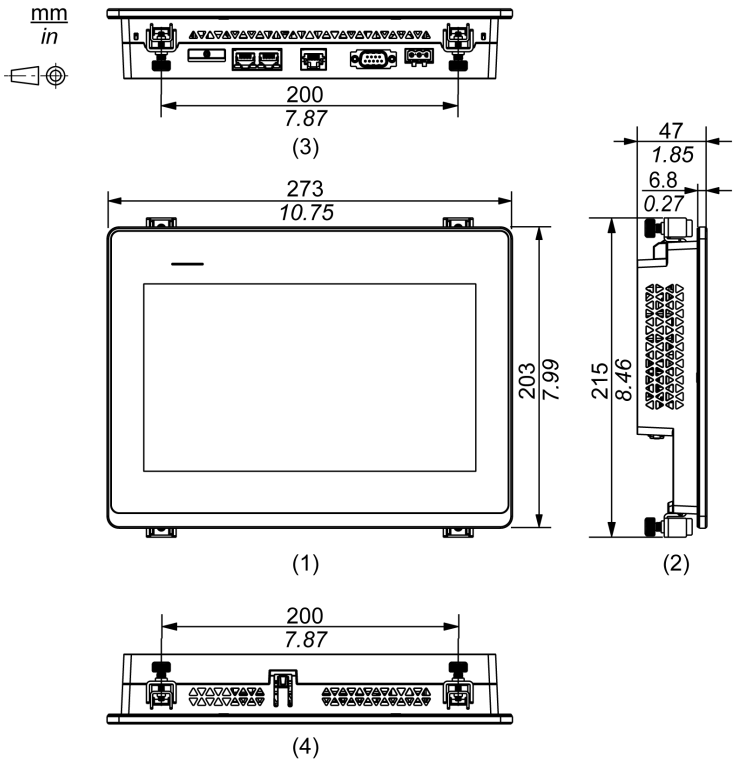

1 Front

2 Left

3 Bottom

4 Top

Dimensions with Cables

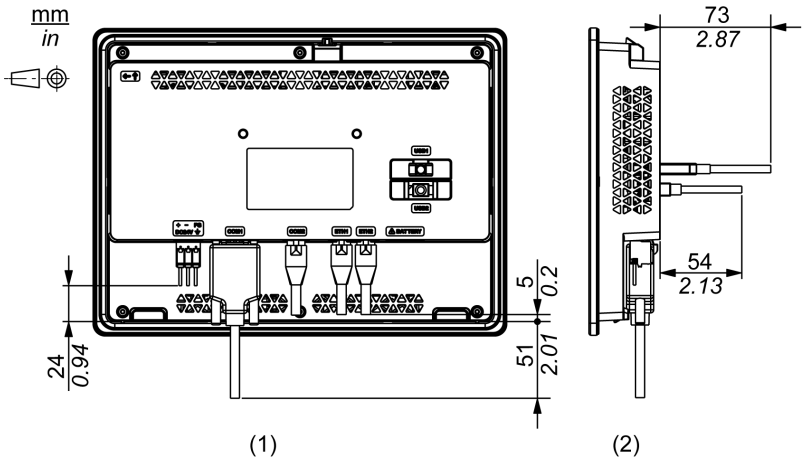

1 Rear

2 Right

NOTE: All the above values are designed with cable bending in mind. The dimensions given here are representative values depending on the type of connection cable in use. Therefore, these values are intended for reference only.

HMIST6600

External Dimensions

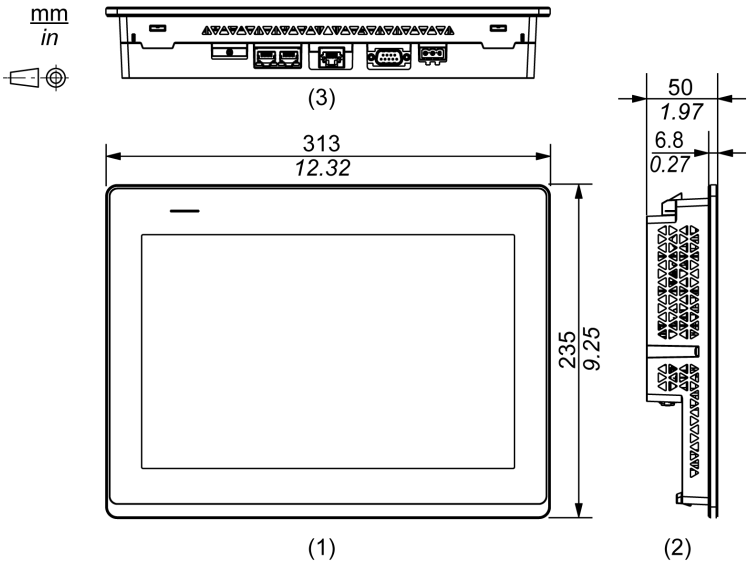

1 Front

2 Left

3 Bottom

Dimensions with Installation Fasteners

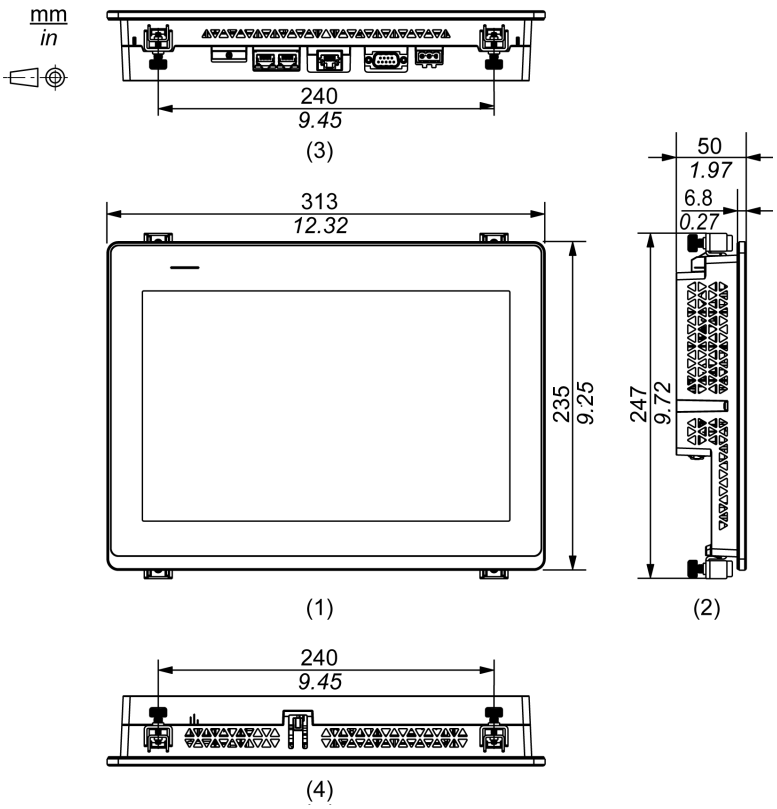

1 Front

2 Left

3 Bottom

4 Top

Dimensions with Cables

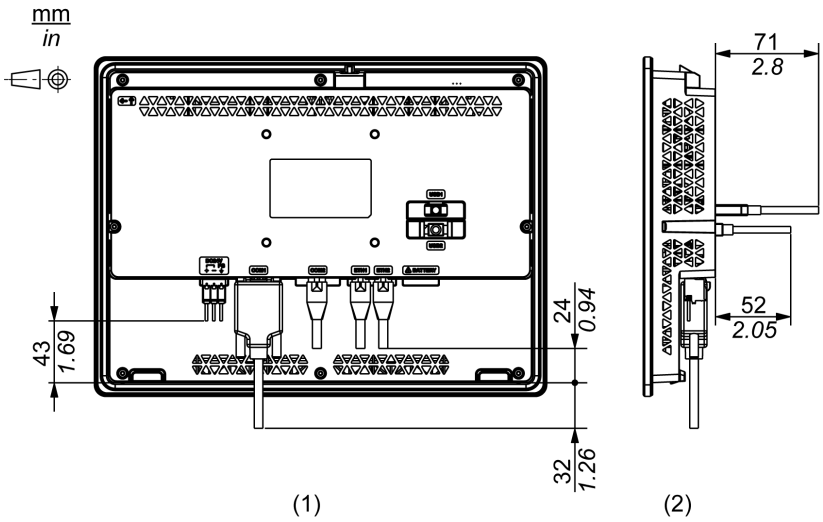

1 Rear

2 Right

NOTE: All the above values are designed with cable bending in mind. The dimensions given here are representative values depending on the type of connection cable in use. Therefore, these values are intended for reference only.

HMIST6700

External Dimensions

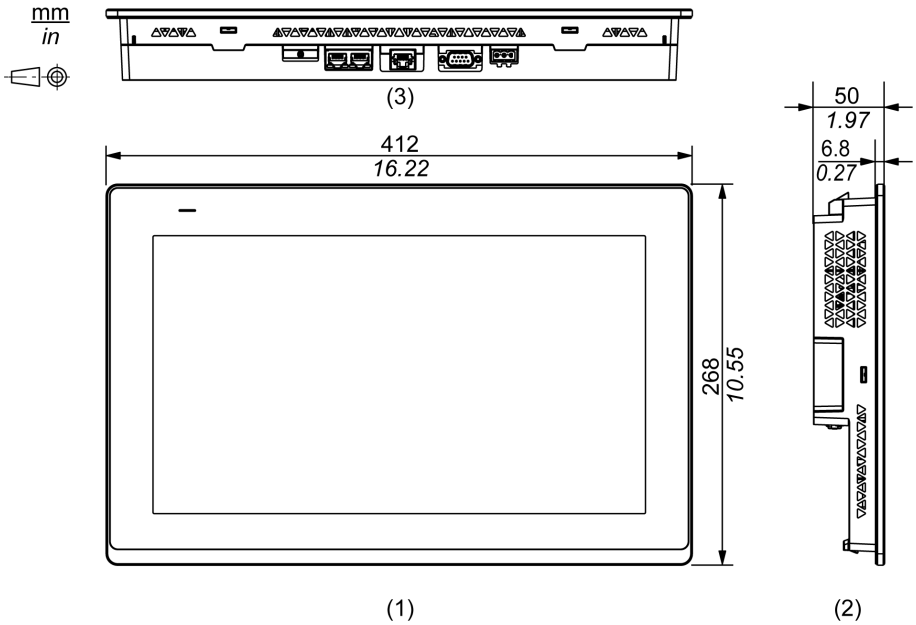

1 Front

2 Left

3 Bottom

Dimensions with Installation Fasteners

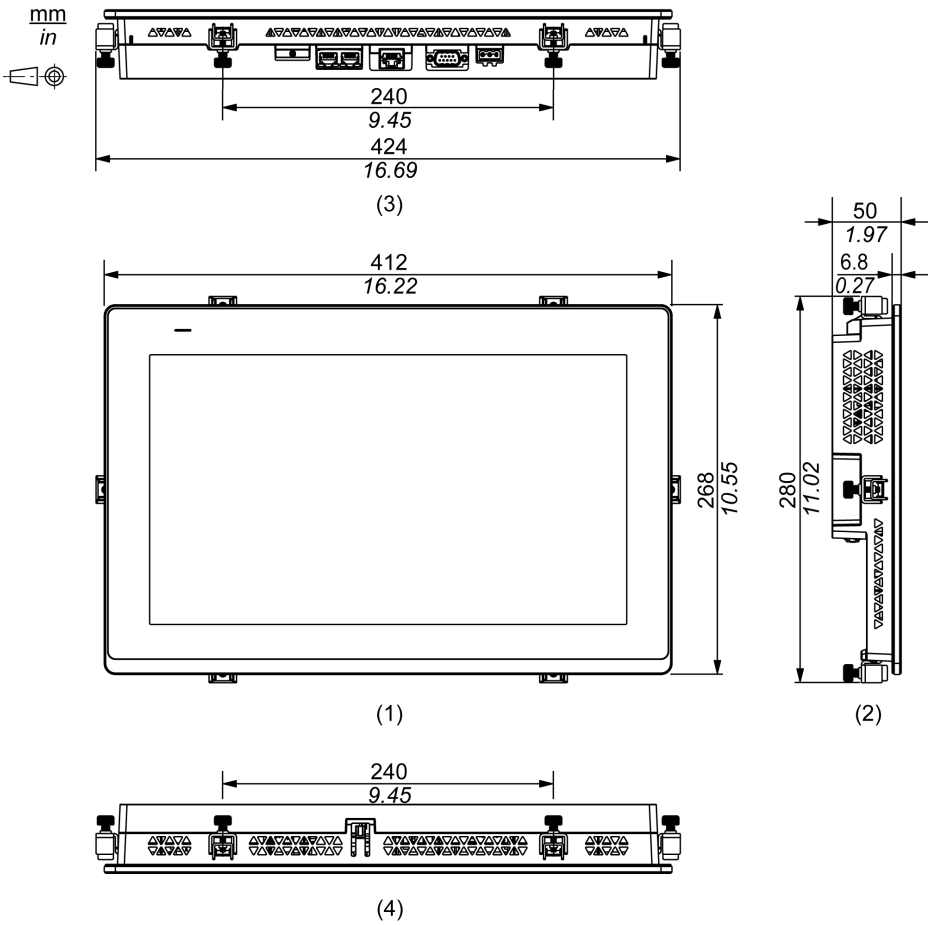

1 Front

2 Left

3 Bottom

4 Top

Dimensions with Cables

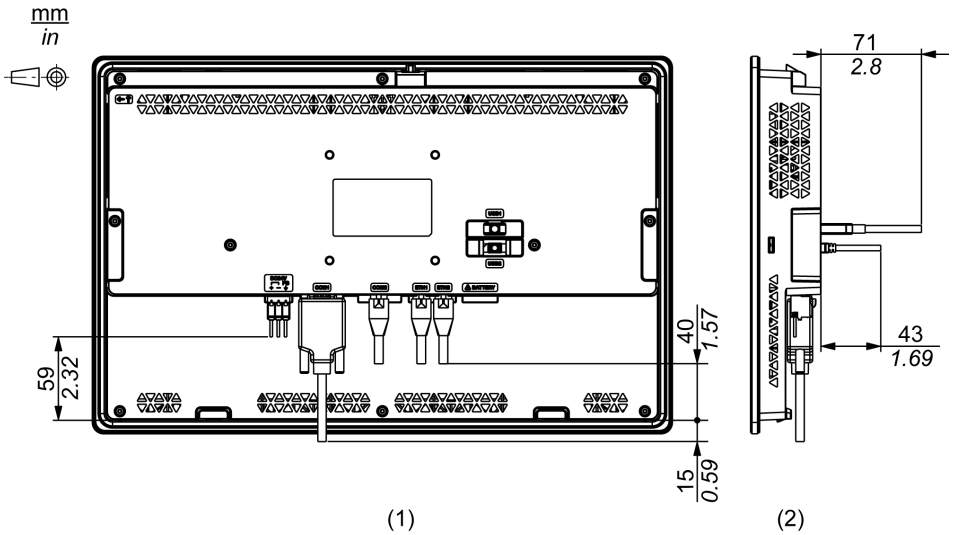

1 Rear

2 Right

NOTE: All the above values are designed with cable bending in mind. The dimensions given here are representative values depending on the type of connection cable in use. Therefore, these values are intended for reference only.

Installation and Wiring

Installation

Precautions for Building into an End-use Product

This product is designed for use on flat surfaces of IP65F, UL 50/50E, Type 1, Type 4X (indoor use only) and Type 13 enclosures.

Be aware of the following when building this product into an end-use product:

- The rear face of this product is not approved as an enclosure. When building this product into an end-use product, be sure to use an enclosure that satisfies standards as the end-use product's overall enclosure.
- Install this product in an enclosure with mechanical rigidity.
- This product is not designed for outdoor use. UL certification obtained is for indoor use only.
- Install and operate this product with its front panel facing outward.

  NOTE:

  - The necessary torque is 0.5 N•m (4.4 lb-in).
  - IP65F is not part of the UL certification.

Installation Requirements

⚠CAUTION

RISK OF BURNING INJURY

Do not touch the bezel or rear chassis during operation.

Failure to follow these instructions can result in injury or equipment damage.

- Check that the installation wall or cabinet surface is flat, in good condition and has no jagged edges. Metal reinforcing strips may be attached to the inside of the wall, near the panel-cut, to increase its rigidity.
- Decide on the thickness of the enclosure wall, based on the level of strength required. Even if the installation wall thickness is within the recommended range for the Panel Cut Dimensions, depending on the wall's material, size, and installation location of this product and other devices, the installation wall could warp. To prevent warping, the installation surface may need to be strengthened.
- Check that the ambient air temperature and the ambient humidity are within their specified ranges in Environmental Specifications, page 21. When installing this product in a cabinet or enclosure, the ambient air temperature is the cabinet's or enclosure's internal and external temperature.

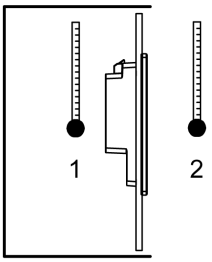

1. Internal temperature
2. External temperature

- Be sure that heat from surrounding equipment does not cause this product to exceed its standard operating temperature.
- When mounting this product in portrait orientation, ensure that the right side of this product faces up. In other words, the DC power connector should be at the top.

  NOTE: For portrait orientation mounting, make sure your screen editing software supports the function.

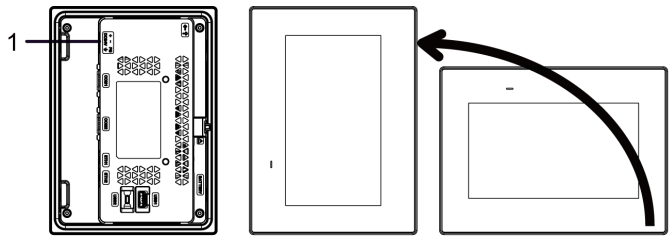

1. Power connector

- When installing this product in a slanted position, the product face should not incline more than 30°.

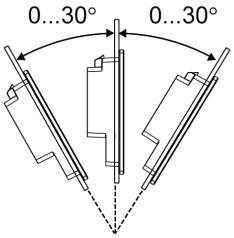

- For easier maintenance, operation and improved ventilation, install this product at least 100 mm (3.94 in) away from adjacent structures and other equipment as shown in the following illustration:

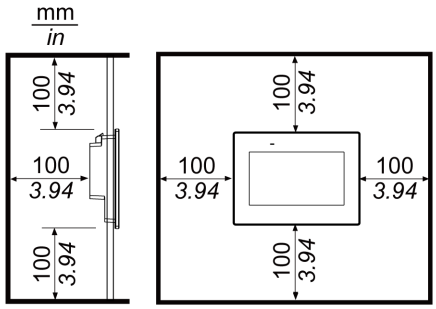

Pressure Differences

When applying and installing this product, it is important that steps are taken to eliminate any pressure difference between the inside and the outside of the enclosure in which this product is mounted. Higher pressure inside the enclosure can cause delamination of the front membrane of the display. Even a small pressure difference inside the enclosure will act on the large area of the membrane and can result in sufficient force to delaminate the membrane and thus cause failure of the touch capability. Pressure differences can often occur in applications where there are multiple fans and ventilators moving air at different rates in different rooms. Please follow these techniques to ensure that this product's function is not impacted by this mis-application:

1. Seal all conduit connections inside of the enclosure, especially those that lead to other rooms that may be at a different pressure.
2. Where applicable, install a small weep hole at the bottom of the enclosure to allow equalization of the internal and external pressure.

Panel Cut Dimensions

Based on the panel cut dimensions, open a mount hole on the panel.

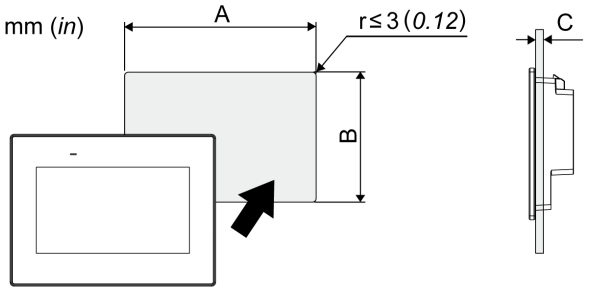

Model name		
A	**B**	**C**
HMIST6200		1.6...5 mm (0.06...0.2 in) When installing HMIST6200 with spring clips: Position 1: 1.5...4 mm (0.06...0.16 in) Position 2: 4...6 mm (0.16...0.24 in) **NOTE:** For the positions, refer to the Installation Procedure (HMIST6200), page 41
118.5 mm (+1/-0 mm) (4.67 in [+0.04/-0 in])	92.5 mm (+1/-0 mm) (3.64 in [+0.04/-0 in])	
HMIST6400		
190 mm (+1/-0 mm) (7.48 in [+0.04/-0 in])	135 mm (+1/-0 mm) (5.31 in [+0.04/-0 in])	
HMIST6500		
255 mm (+1/-0 mm) (10.04 in [+0.04/-0 in])	185 mm (+1/-0 mm) (7.28 in [+0.04/-0 in])	
HMIST6600		
295 mm (+1/-0 mm) (11.61 in [+0.04/-0 in])	217 mm (+1/-0 mm) (8.54 in [+0.04/-0 in])	
HMIST6700		
394 mm (+1/-0 mm) (15.51 in [+0.04/-0 in])	250 mm (+1/-0 mm) (9.84 in [+0.04/-0 in])	

Installation Procedure (HMIST6200)

⚠⚠DANGER

HAZARD OF ELECTRIC SHOCK, EXPLOSION, OR ARC FLASH

- Remove all power from the device before removing any covers or elements of the system, and prior to installing or removing any accessories, hardware, or cables.
- Unplug the power cable from both this product and the power supply prior to installing or removing the product.
- Always use a properly rated voltage sensing device to confirm power is off where and when indicated.
- Replace and secure all covers or elements of the system before applying power to this product.
- Use only the specified voltage when operating this product. This product is designed to use 24 Vdc. Always check whether your device is DC powered before applying power.

Failure to follow these instructions will result in death or serious injury.

NOTICE
EQUIPMENT DAMAGE • Always use the installation gasket. • Keep this product stabilized in the panel-cut while you are installing or removing the screw fasteners. **Failure to follow these instructions can result in equipment damage.**

Installing Using Installation Fasteners

Step	Action
1	Place this product on a clean and level surface with the screen facing down.
2	Check that this product's gasket is seated securely into the bezel's groove, which runs around the perimeter of the display panel frame. **NOTE:** Always use the installation gasket, since it absorbs vibration in addition to repelling water. For the procedure on replacing the installation gasket, refer to Replacing the Installation Gasket, page 57.
3	Based on this product's Panel Cut Dimensions, page 41, open a mount-hole on the panel and attach this product to the panel from the front side. **NOTE:** This product has a hook at the top to prevent it from falling. Insert the bottom part of the product into the panel opening, and then insert the top part while pushing the hook down. 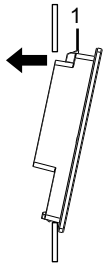 1 Hook

Step	Action
4	Insert the installation fastener hooks into the insertion slots of this product. 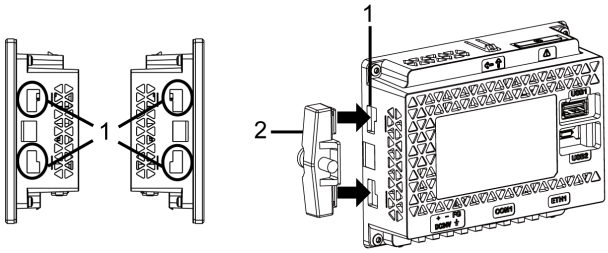 1 Insertion slots 2 Installation fastener
5	In a clockwise direction, tighten the installation fastener's screws with a screwdriver. The necessary torque is 0.5 N•m (4.4 lb-in). 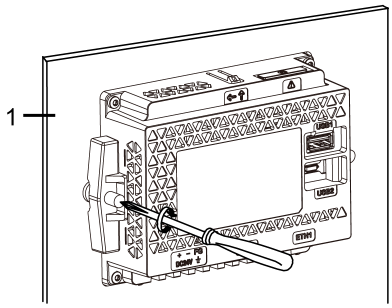 1 Installation panel

NOTICE

BROKEN ENCLOSURE

Do not exert more torque than the amount specified.

Failure to follow these instructions can result in equipment damage.

Installing Using Spring Clips

⚠CAUTION

SPRING LOADED MECHANISM

Do not release the spring clip mechanism near your face.

Failure to follow these instructions can result in injury or equipment damage.

Step	Action
1	Place this product on a clean and level surface with the screen facing down.
2	Check that this product's gasket is seated securely into the bezel's groove, which runs around the perimeter of the display frame. **NOTE:** Always use the installation gasket, since it absorbs vibration in addition to repelling water. For the procedure on replacing the installation gasket, refer to Replacing the Installation Gasket, page 57.
3	Based on this product's Panel Cut Dimensions, page 41, open a mount hole on the panel and attach this product to the panel from the front side. **NOTE:** This product has a hook at the top to prevent it from falling. Insert the bottom part of the product into the panel opening, and then insert the top part while pushing the hook down.

Step	Action
	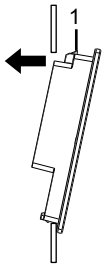 1 Hook
4	Press the spring clip hooks into the insertion slots on this product. Adjust the spring clips for the panel thickness by turning it over: • Position 1 1.5 mm (0.059 in) ≤ panel thickness ≤ 4 mm (0.157 in). • Position 2 4 mm (0.157 in) ≤ panel thickness ≤ 6 mm (0.236 in). 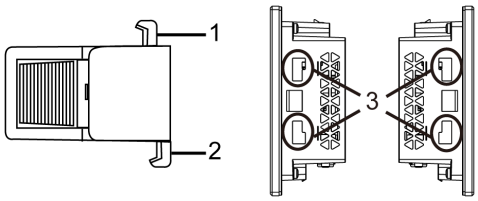 Side of the spring clip 1 Hook for position 1 2 Hook for position 2 3 Insertion slots
5	Lock the spring clips by simultaneously pressing the top and bottom of the clip. 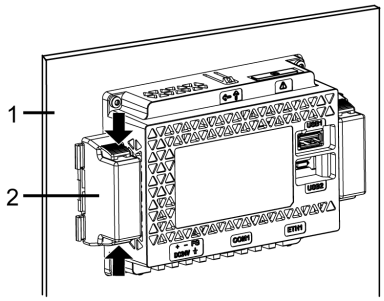 1 Installation panel 2 Spring clip
6	To remove the spring clips, unlock the clips by pressing on the back of the clip until you hear a click. 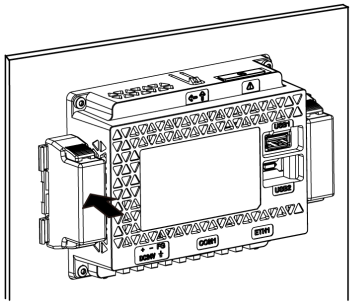

⚠ CAUTION

RISK OF INJURY

Do not drop this product when you remove it from the panel.

- Hold this product in place after removing the spring clips.
- Use both hands.
- While pushing on the hook, be careful not to hurt your fingers.

Failure to follow these instructions can result in injury or equipment damage.

Installation Procedure (HMIST64/65/66/6700)

⚠⚠ DANGER

HAZARD OF ELECTRIC SHOCK, EXPLOSION, OR ARC FLASH

- Remove all power from the device before removing any covers or elements of the system, and prior to installing or removing any accessories, hardware, or cables.
- Unplug the power cable from both this product and the power supply prior to installing or removing the product.
- Always use a properly rated voltage sensing device to confirm power is off where and when indicated.
- Replace and secure all covers or elements of the system before applying power to this product.
- Use only the specified voltage when operating this product. This product is designed to use 24 Vdc. Always check whether your device is DC powered before applying power.

Failure to follow these instructions will result in death or serious injury.

NOTICE

EQUIPMENT DAMAGE

- Always use the installation gasket.
- Keep this product stabilized in the panel-cut while you are installing or removing the screw fasteners.

Failure to follow these instructions can result in equipment damage.

Installing Using Installation Fasteners

Step	Action
1	Place this product on a clean and level surface with the screen facing down.
2	Check that this product's gasket is seated securely into the bezel's groove, which runs around the perimeter of the display panel frame. **NOTE:** Always use the installation gasket, since it absorbs vibration in addition to repelling water. For the procedure on replacing the installation gasket, refer to Replacing the Installation Gasket, page 57.
3	Based on this product's Panel Cut Dimensions, page 41, open a mount-hole on the panel and attach this product to the panel from the front side.

Step	Action
	NOTE: This product has a hook at the top to prevent it from falling. Insert the bottom part of the product into the panel opening, and then insert the top part while pushing the hook down. 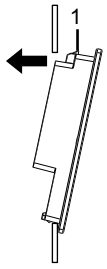 1 Hook
4	Insert the installation fastener hooks into the insertion slots of this product. 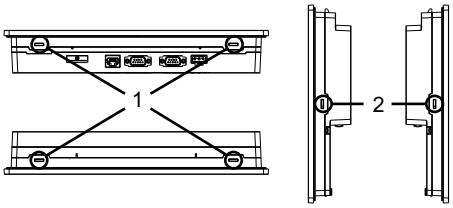 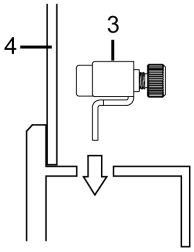 1 Insertion slots 2 Insertion slots (HMIST6700 only) 3 Installation fastener 4 Installation panel
5	In a clockwise direction, tighten the installation fastener's screws with a screwdriver. The necessary torque is 0.5 N•m (4.4 lb-in). 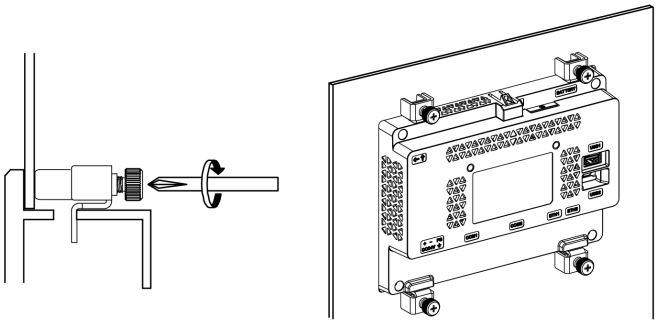 **NOTE:** The installation fasteners can be screwed by hand too.

Removal Procedure

⚠⚠DANGER

HAZARD OF ELECTRIC SHOCK, EXPLOSION, OR ARC FLASH

- Remove all power from the device before removing any covers or elements of the system, and prior to installing or removing any accessories, hardware, or cables.
- Unplug the power cable from both this product and the power supply prior to installing or removing the product.
- Always use a properly rated voltage sensing device to confirm power is off where and when indicated.

Failure to follow these instructions will result in death or serious injury.

NOTICE

EQUIPMENT DAMAGE

Keep this product stabilized in the panel-cut while you are installing or removing the screw fasteners.

Failure to follow these instructions can result in equipment damage.

Step	Action
1	Loosen the screws of the installation fasteners and remove them.
2	While pushing the hook on the top of this product, slowly remove this product from the panel. 1 Hook

⚠CAUTION

RISK OF INJURY

Do not drop this product when you remove it from the panel.

- Hold this product in place after removing the fasteners.
- Use both hands.
- While pushing on the hook, be careful not to hurt your fingers.

Failure to follow these instructions can result in injury or equipment damage.

NOTICE

EQUIPMENT DAMAGE

To avoid damage, remove this product while pushing the hook or by making sure the lock does not touch the panel.

Failure to follow these instructions can result in equipment damage.

Wiring the Power Supply

Connecting the DC Power Cord

⚠⚠DANGER

HAZARD OF ELECTRIC SHOCK, EXPLOSION, OR ARC FLASH

- Remove all power from the device before removing any covers or elements of the system, and prior to installing or removing any accessories, hardware, or cables.
- Remove power before wiring this product's power terminals.
- Always use a properly rated voltage sensing device to confirm power is off where and when indicated.
- Replace and secure all covers or elements of the system before applying power to this product.
- Use only the specified voltage when operating this product. This product is designed to use 24 Vdc. Always check whether your device is DC powered before applying power.
- Since this product is not equipped with a power switch, be sure to connect a power switch to the power supply.
- Be sure to ground this product's FG terminal.

Failure to follow these instructions will result in death or serious injury.

NOTE:

- The SG and FG terminals are separated inside this product.
- When the FG terminal is connected, be sure the wire is grounded. Not grounding this product can result in excessive electromagnetic interference (EMI).

DC Power Cord Preparation

- Make sure the ground wire is either the same or heavier gauge than the power wires.
- Do not use aluminum wires in the power supply's power cord.
- If the ends of the individual wires are not twisted correctly, the wires may create a short circuit.
- The conductor type is solid or stranded wire.
- Use copper wire rated for 75 °C (167 °F) or higher.
- Use the SELV (Safety Extra-Low Voltage) circuit and LIM (Limited Energy) circuit for DC input.

Power cord diameter	0.75...2.5 mm^2 (18...13 AWG)*1
Conductor type	Solid or stranded wire
Conductor length	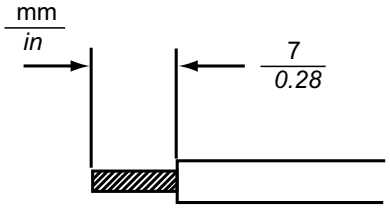
Recommended driver	Flat-head screwdriver (size 0.6 x 3.5)

*1 For UL compatibility, use AWG 14 or AWG 13.

DC Power Supply Connector Specifications

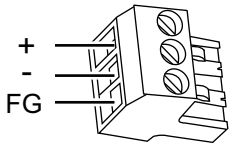

+	24 Vdc
-	0 Vdc
FG	Functional ground (Connect the FG terminal properly to ground.)

NOTE: Part number: XBTZGPWS1

How to connect the DC Power Cord

Step	Action
1	Confirm the power cord is not connected to the power supply.
2	Check the rated voltage.
3	Remove the DC power supply connector from this product.
4	Strip the membrane of the power cord, and twist the wire ends.
5	Insert each power cord wire into its corresponding hole. Fasten the screws of the DC power supply connector to clamp the wire in place. **NOTE:** • The necessary torque is 0.56 N•m (5 lb-in). • Do not solder the cable connection.
6	After inserting all three power cord wires, insert the DC power supply connector into the power connector on this product.

Power Supply Precautions

⚠⚠DANGER

SHORT CIRCUIT, FIRE, OR UNINTENDED EQUIPMENT OPERATION

- Install and fasten this product in an installation panel or cabinet prior to connecting power supply and communication lines.
- Securely attach power cables to an installation panel or cabinet.
- Avoid excessive force on the power cable.

Failure to follow these instructions will result in death or serious injury.

Improving Noise/Surge Resistance

- This product's power cord should not be bundled with or kept close to main circuit lines (high voltage, high current), power lines, or input/output lines, and their various systems should be kept separate. When power lines cannot be wired via a separate system, use shielded cables for input/output lines.
- Make the power cord as short as possible, and twist the wires (twisted pair cabling) all the way from the side of the power supply unit.
- If there is an excess amount of noise on the power supply line, reduce the noise with a noise filter before turning on the power.

- Connect a surge protection device to handle power surges.
- To increase noise resistance, attach a ferrite core to the power cable.

Power Supply Connections

- When supplying power to this product, connect the power as shown below.

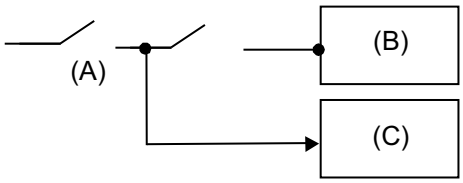

A. Main power
B. This product
C. Other unit

- Use the SELV (Safety Extra-Low Voltage) circuit and LIM (Limited Energy) circuit for DC input.
- The following shows a surge protection device connection:

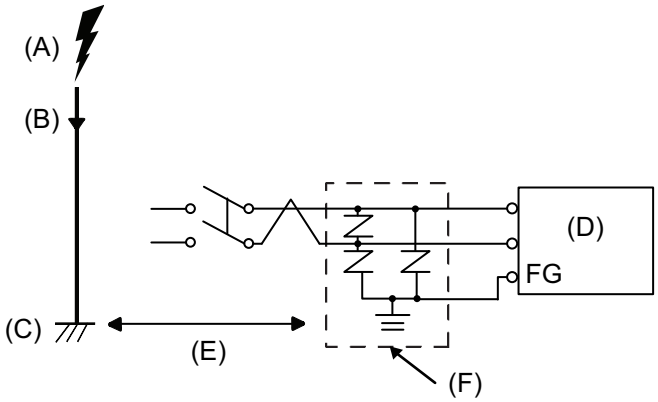

A. Lightning
B. Lightning rod
C. Ground
D. This product
E. Provide adequate distance
F. Surge protection device

- Attach a surge protection device to prevent damage to this product as a result of a lightning induced power surge from a large electromagnetic field generated from a direct lightning strike.

  We also strongly recommend to connect the crossover grounding wire of this product to a position close to the ground terminal of the surge protection device.

  It is expected that there will be an effect on this product due to fluctuations in grounding potential when there is a large surge flow of electrical energy to the lightning rod ground at the time of a lightning strike. Provide adequate distance between the lightning rod grounding point and the surge protection device grounding point.

- If the voltage variation is outside the prescribed range, connect a regulated power supply.

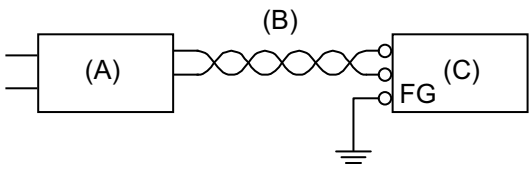

A. Regulated power supply
B. Twisted-pair cord
C. This product

Grounding

Independent Grounding

Always ground the FG (functional ground) terminal. Be sure to separate this product from the FG of other devices as shown below.

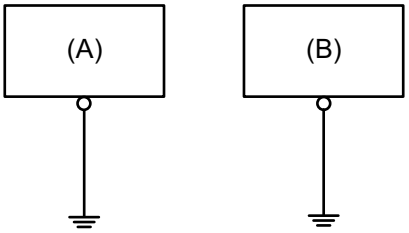

A. This product
B. Other equipment

Precautions

- Check that the grounding resistance is 100 Ω or less.[*1]
- The FG wire should have a cross sectional area 2 mm^2 (AWG14) or greater[*1]. Create the connection point as close as possible to this product, and make the wire as short as possible. When using a long grounding wire, replace the thin wire with a thicker wire, and place it in a duct.
- The SG and FG terminals are separated internally in this product. When connecting the FG and SG, be sure that no ground loop is formed.

[*1] Observe local codes and standards.

Common Grounding

Electromagnetic Interference (EMI) can be created if devices are improperly grounded. EMI can cause loss of communication. If exclusive grounding is not possible, use a common grounding point as shown in the configuration below. Do not use any other configuration for common grounding.

Correct grounding

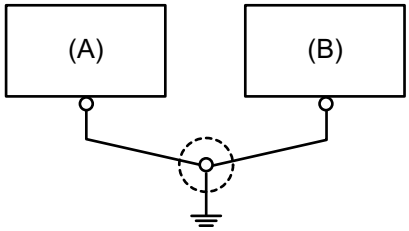

A. This product
B. Other equipment

Incorrect grounding

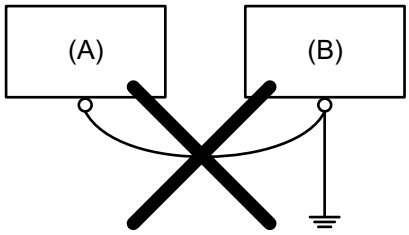

A. This product
B. Other equipment

USB Cable Clamp

USB Clamp Type A (1 port)

Introduction

When using a USB device, attach a USB cable clamp to the USB interface to prevent the USB cable from being disconnected.

⚠ DANGER

EXPLOSION HAZARD

- Do not disconnect equipment while the circuit is live or unless the area is known to be free of ignitable concentrations.
- Remove power before attaching or detaching any connectors to or from this product.
- Ensure that power, communication, and accessory connections do not place excessive stress on the ports. Consider the vibration in the environment when making this determination.
- Securely attach power, communication, and external accessory cables to the panel or cabinet.
- Use only commercially available USB cables.
- Use only non-incendive USB configurations.
- Use the USB (micro-B) interface for temporary connection only during maintenance and setup of the device.
- Do not use this product in hazardous environments.
- Confirm that the USB cable has been attached with the USB cable clamp before using the USB interface.

Failure to follow these instructions will result in death or serious injury.

Attaching USB Clamp Type A (1 port)

NOTE: Watch your fingers. The edge of the clip is sharp.

Step	Action
1	Mount the clip to the USB mark connector shell so that it overlaps. The clip matches the 27 to 43.5 mm (1.06 to 1.71 in) length of the USB connector. 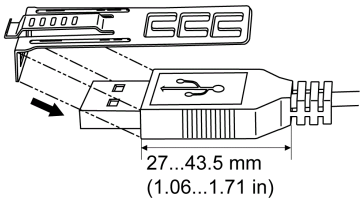
2	Align the clip and the USB cable connector shell. Adjust the position of the holes where the clip is attached. To ensure stability, select the clip-hole position that is closest to the base of the connector shell. 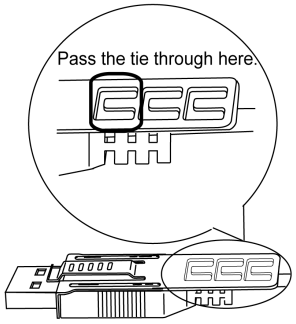

Step	Action
3	As shown, pass the tie through the clip hole. Next, turn the tie and pass it through the head so that the USB cable can pass through the center of the tie loop. The clip is now attached to the USB cable. 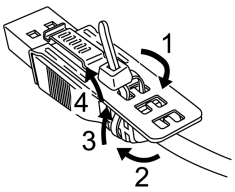 **NOTE:** • Check the direction of the head beforehand. Make sure the USB cable is through the center of the tie loop and that the tie can pass through the head. • You can substitute the tie provided with HMIZGCLP1 (by Schneider Electric), or other commercially available ties with a width of 4.8 mm (0.19 in) and thickness of 1.3 mm (0.05 in).
4	While pressing the grip on the clip, insert the cable from step 3 all the way into the USB host interface. Make sure that the clip tab is secured to the USB cable attached to this product. 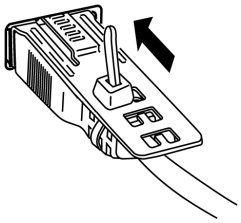

Removing USB Cable Clamp Type A (1 port)

Remove the USB cable while pushing the grip section of the clip.

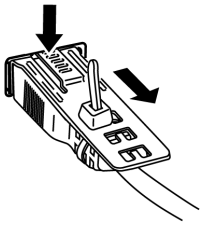

Isolation Unit

You can install the Isolation Unit to the back of this product or to the installation panel. For details such as settings when using the Isolation Unit (XBTZGI232 or XBTZGI485), refer to the product manual.

⚠⚠ DANGER

HAZARD OF ELECTRIC SHOCK OR EXPLOSION

Prior to connecting the Isolation Unit to this product, confirm that this product's power supply is completely turned OFF.

Failure to follow these instructions will result in death or serious injury.

Installation Procedure

NOTE:

- Attach the Isolation Unit to a stable surface. Do not leave the Isolation Unit hanging by its cord.
- Be careful with wire placement. Overlapping cords may cause noise.
- HMIST6200 does not support the Isolation Unit.

Step	Action
1	Check the locations of two screw holes on the rear of this product. 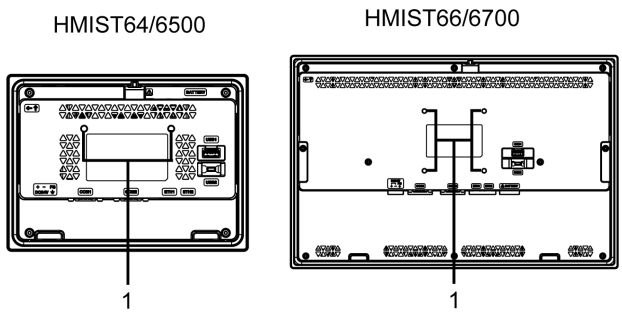 1 Screw hole
2	Install one of the two attachment screws included in the Isolation Unit to this product. Use a torque of 0.5 N•m (4.4 lb-in). 1 Attachment screw A This product
3	Attach the Isolation Unit to this product. 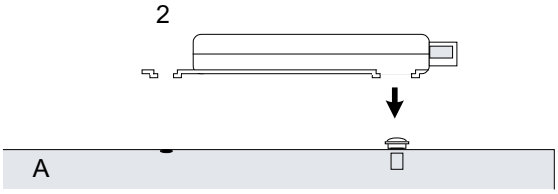 2 Isolation unit A This product
4	Slide the Isolation Unit in the direction of the arrow so the Isolation Unit is hooked by the screw from Step 2. A This product
5	Secure the Isolation Unit in place with another attachment screw. Use a torque of 0.5 N•m (4.4 lb-in). 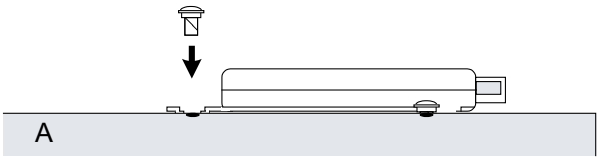 A This product

Maintenance

Regular Cleaning

Cleaning this product

NOTICE

EQUIPMENT DAMAGE

- Power off this product before cleaning it.
- Do not use hard or pointed objects to operate the touch panel.
- Do not use paint thinner, organic solvents, or a strong acid compound to clean the unit.

Failure to follow these instructions can result in equipment damage.

When this product gets dirty, wipe this product with a soft, dry cloth or a soft cloth soaked in only water and wrung tightly.

NOTE: When the product is very dirty, soak the soft cloth in water with a neutral detergent, wring the cloth tightly and wipe the product while avoiding the product label.

Periodic Check Points

Operation Environment

- Is the ambient air temperature within the allowable range? Refer to Environmental Specifications, page 21.
- Is the ambient air humidity within the specified range? Refer to Environmental Specifications, page 21.
- Is the operating atmosphere free of corrosive gasses?

When this product is inside a panel, the ambient environment refers to the interior of the panel.

Electrical Specifications

- Is the input voltage appropriate? Refer to Electrical Specifications, page 21.
- Are all power cords and cables connected properly? Are there any loose cables?
- Are all mounting brackets holding the unit securely?
- Are there scratches or traces of dirt on the installation gasket?

Unit Disposal

When disposing this product, dispose it in a manner appropriate to, and in accordance with, your country's industrial machinery disposal/recycling standards.

Replacing the Installation Gasket

Introduction

The installation gasket provides protection against dust and moisture.

NOTICE
GASKET AGING • Inspect the gasket periodically as required by your operating environment. • Change the gasket at least once a year, or as soon as scratches or dirt become visible. **Failure to follow these instructions can result in equipment damage.**

Installing the Installation Gasket

Step	Action
1	Place this product on a flat, level surface, with the display face pointing down.
2	Remove the gasket from this product.
3	Attach the new gasket to this product. Insert the protrusions from the four corners of the gasket into the corresponding holes in the corners of this product. Depending on your model, there may be additional protrusions. In the following, refer to the figure on the right and insert the protrusions accordingly. **NOTE:** When using a tool to insert the gasket, make sure the tool does not catch the rubber gasket and cause a tear. 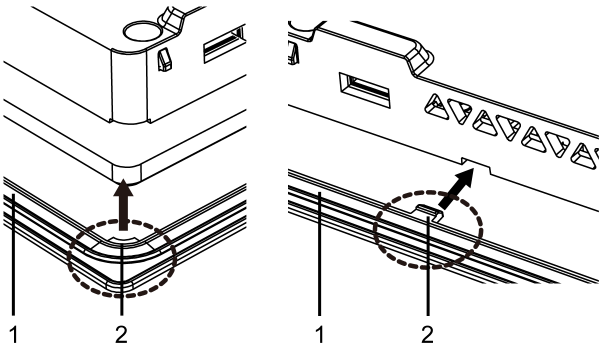 1 Installation gasket 2 Protruding point

The gasket must be inserted correctly into the groove for moisture resistance of this product.

NOTICE
EQUIPMENT DAMAGE Be careful not to stretch the gasket unnecessarily. **Failure to follow these instructions can result in equipment damage.**

Replacing the Battery

This product uses a primary battery for data backup of the internal clock. If the battery is depleted, the clock data will be lost. Use only the replacement battery for this product (HMIZSBA1).

⚠⚠DANGER

HAZARD OF ELECTRIC SHOCK, EXPLOSION, OR ARC FLASH

- Follow the procedures step by step to replace the battery correctly and safely.
- Before replacing the battery, turn off this product's power.

Failure to follow these instructions will result in death or serious injury.

⚠DANGER

EXPLOSION, FIRE, OR CHEMICAL HAZARD

- Use only the identical replacement battery for this product.
- Do not cause a short circuit.
- Recycle or properly dispose of used batteries.
- Do not recharge, disassemble or heat above 80 °C (176 °F).
- Use your hands or insulated tools to remove or replace the battery.
- Maintain proper polarity when inserting and connecting a new battery.

Failure to follow these instructions will result in death or serious injury.

NOTICE

LOSS OF DATA

- Replace the battery regularly every five years after you purchase this product.
- Allow only qualified personnel to change the battery.

Failure to follow these instructions can result in equipment damage.

Step	Action
1	Disconnect the power supply from this product.
2	Touch the housing or ground connection to discharge any electrostatic charge from your body.
3	Place this product on a flat, level surface, with the front side pointing up.
4	Open the battery slot on the top or bottom of this product. 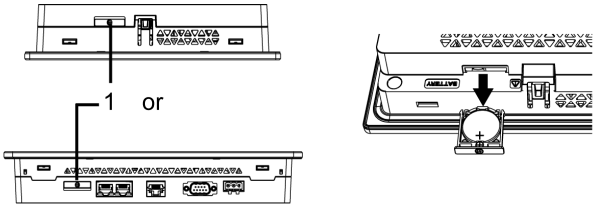

Step	Action
	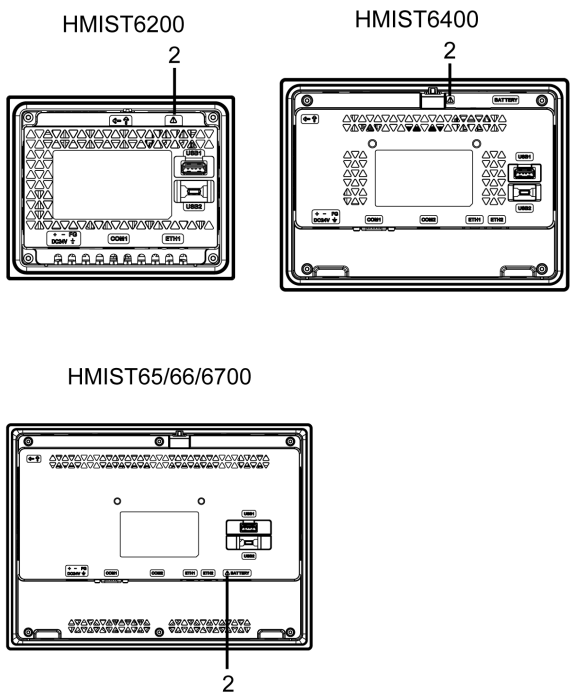 1 Battery slot 2 Safety alert symbol (see the safety messages stated on the previous page)
5	Remove the spent battery from the tray by touching the battery from the bottom. 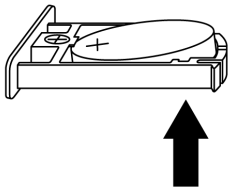
6	Put the new battery on the tray in accordance with the polarity markings in the tray and on the battery.
7	Insert the tray into the battery slot.
8	Reconnect the power supply to this product. **NOTE:** After reconnecting the power supply, set up the clock again. Refer to your screen editing software manual on how to set up the clock.

Replacing the Backlight

Not replaceable. Please contact your local distributor.

Schneider Electric
35 rue Joseph Monier
92500 Rueil Malmaison
France

+ 33 (0) 1 41 29 70 00

www.se.com

As standards, specifications, and design change from time to time, please ask for confirmation of the information given in this publication.

© 2022 Schneider Electric. All rights reserved.

EIO0000003527_03