PowerLogic™ HDPM6000 Series Current Transducer Installation Manual

Z208152-0F

The PowerLogic™ HDPM6000 series low-voltage current transducers (LVCT) provide secondary AC voltage proportional to the primary (sensed) alternating current. For use with the HDPM6000 platform only, these current transducers provide a means to transform electrical service amperages to a voltage compatible with monitoring equipment.

www.se.com
HDPM6000 Series Current Transducer Models

Refer to the following installation guides (part number):
HDPM6000B (Z208131), HDPM6000 Head Unit (Z208128), HDPM6000 I/O Module (Z208142), HDPM6000R (Z208129), HDPM6000S24 (Z208449) and HDPM6000S (Z208130).

1 Safety Information

Important Information

Read these instructions carefully and look at the equipment to become familiar with the device before trying to install, operate, service or maintain it. The following special messages may appear throughout this bulletin or on the equipment to warn of potential hazards or to call attention to information that clarifies or simplifies a procedure.

The addition of either symbol to a “Danger” or “Warning” safety label indicates that an electrical hazard exists which will result in personal injury if the instructions are not followed.

This is the safety alert symbol. It is used to alert you to potential personal injury hazards. Obey all safety messages that follow this symbol to avoid possible injury or death.

DANGER

DANGER indicates a hazardous situation which, if not avoided, **will result in** death or serious injury. / **DANGER** indique un danger immédiat qui, s’il n’est pas évité, entraînera la mort ou des blessures graves.

WARNING / AVERTISSEMENT

WARNING indicates a hazardous situation which, if not avoided, **could result in** death or serious injury. / **AVERTISSEMENT** indique un danger potentiel qui, s’il n’est pas évité, pourrait entraîner la mort ou des blessures graves.

CAUTION / ATTENTION

CAUTION indicates a hazardous situation which, if not avoided, **could result in** minor or moderate injury. / **ATTENTION** indique un danger potentiel qui, s’il n’est pas évité, pourrait entraîner des blessures légères ou de gravité moyenne.

***NOTICE* / AVIS**

NOTICE is used to address practices not related to physical injury. / **AVIS** concerne des questions non liées à des blessures corporelles.

Please Note

Electrical equipment should be installed, operated, serviced and maintained only by qualified personnel. No responsibility is assumed by Schneider Electric for any consequences arising out of the use of this material. A qualified person is one who has skills and knowledge related to the construction, installation and operation of electrical equipment and has received safety training to recognize and avoid the hazards involved.

2 Safety Precautions

Installation, wiring, testing and service must be performed in accordance with all local and national electrical codes.

DANGER

HAZARD OF ELECTRIC SHOCK, EXPLOSION, OR ARC FLASH / RISQUE D’ÉLECTROCUTION, D’EXPLOSION OU D’ARC ÉLECTRIQUE

- Apply appropriate personal protective equipment (PPE) and follow safe electrical work practices. See NFPA 70E in the USA or applicable local standards. / Portez un équipement de protection individuelle (EPI) approprié et observez les règles de sécurité en matière de travaux électriques. Consultez la norme NFPA 70E aux États-Unis ou les normes locales applicables.
- This equipment must only be installed and serviced by qualified electrical personnel. / Cet équipement ne doit être installé et entretenu que par du personnel qualifié.
- Turn off all power supplying equipment before working on or inside the equipment. / Coupez toutes les équipements d’alimentation électrique avant de travailler sur ou dans l’équipement.
- Product may use multiple voltage/power sources. Disconnect all sources of power before servicing. / Le produit peut utiliser plusieurs sources de tension / alimentation. Déconnectez toutes les sources d’alimentation avant de procéder à l’entretien.
- Always use a properly rated voltage sensing device to confirm power is off. / Utilisez systématiquement un dispositif de détection de tension correctement calibré pour vérifier que l’alimentation est coupée.
- Do not depend on this product for voltage indication. / Ne comptez pas uniquement sur ce produit pour indiquer les valeurs de tension.
- Products rated for basic insulation must be installed on insulated conductors. / Les produits normés pour une isolation standard doivent être installés sur des conducteurs isolés.
- Replace all doors, covers and protective devices before powering the equipment. / Replacez toutes les portes, tous les capots et dispositifs de protection avant de mettre l’équipement sous tension.
- Install device in an appropriate electrical and fire enclosure per local regulations. / Installez l’appareil dans une armoire électrique et anti-feu appropriée, conformément aux réglementations locales.
- This product is not intended for life or safety applications. / Ce produit n’est pas conçu pour les applications de sécurité.

Failure to follow these instructions will result in death or serious injury. / Le non-respect de ces instructions est susceptible d’entraîner la mort ou des blessures graves.

2 Safety Precautions

⚠ WARNING / AVERTISSEMENT

RISK OF INJURY OR EQUIPMENT DAMAGE / RISQUE DE BLESSURE OU DE DÉTÉRIORATION DE L'ÉQUIPEMENT

Do not apply current transducer to circuits having a phase-to-phase voltage greater than their voltage rating unless adequate additional insulation is applied between the primary conductor and the current transducers. / N'appliquez pas les capteurs de courant à des circuits où la tension entre phases est supérieure à leur tension nominale, à moins d'appliquer une isolation supplémentaire entre le conducteur primaire et les capteurs de courant.

Failure to follow these instructions may result in injury, fire or equipment damage. / Le non-respect de ces instructions peut entraîner un risque de blessure, d'incendie ou de détérioration de l'équipement.

Schneider Electric assumes no responsibility for damage of equipment or personal injury caused by products operated on circuits above their published ratings.

3 Ordering Information

CTs Compatible With HDPM6000 Head Unit, HDPM6000R Retrofit Module and I/O Module

Commercial Reference / Model	Lead Length	Weight	Form Factor	Accuracy	Description	Type of CT
METSEHDPM20A12H	12 ft (3.66 m)	1.088 lb (0.494 kg)	SUN2	0.2%	20 A CT	Split-Core
METSEHDPM20A30H	30 ft (9.14 m)	1.946 lb (0.883 kg)				
METSEHDPM75A12	12 ft (3.66 m)	0.350 lb (0.159 kg)	CTMF	1.0%	75 A CT	
METSEHDPM75A12H	12 ft (3.66 m)	1.137 lb (0.516 kg)	SUN3	0.2%		
METSEHDPM75A30	30 ft (9.14 m)	0.710 lb (0.322 kg)	CTMF	1.0%		
METSEHDPM75A30H	30 ft (9.14 m)	1.996 lb (0.905 kg)	SUN3	0.2%		
METSEHDPM75A60H	60 ft (18.29 m)	2.596 lb (1.177 kg)				
METSEHDPM75A60	60 ft (18.29 m)	2.305 lb (1.046 kg)	CTMF	1.0%		
METSEHDPM125A12	12 ft (3.66 m)	0.350 lb (0.159 kg)	CTTG	0.1%	125 A CT	Solid-Core
METSEHDPM125A30	30 ft (9.14 m)	0.710 lb (0.322 kg)				
METSEHDP150A12H	12 ft (3.66 m)	1.187 lb (0.538 kg)	SUN3	0.2%	150 A CT	Split-Core
METSEHDP150A30H	30 ft (9.14 m)	2.046 lb (0.928 kg)				
METSEHDP150A60H	60 ft (18.29 m)	2.646 lb (1.200 kg)				
METSEHDPM150A12	12 ft (3.66 m)	1.137 lb (0.516 kg)	SUS4	0.5%		
METSEHDPM150A30	30 ft (9.14 m)	1.996 lb (0.905 kg)				
METSEHDPM150A60	60 ft (18.29 m)	2.595 lb (1.177 kg)				
METSEHD150A12	12 ft (3.66 m)	1.167 lb (0.529 kg)	SUSF (Small)	1.0%	150 A CT, 1 in x 1 in (2.54 cm x 2.54 cm)	
METSEHD150A30	30 ft (9.14 m)	2.026 lb (0.919 kg)				
METSEHD150A60	60 ft (18.29 m)	2.625 lb (1.190 kg)				
METSEHDP300A12H	12 ft (3.66 m)	1.287 lb (0.584 kg)	SUN4	0.2%	300 A CT	
METSEHDPM300A12	12 ft (3.66 m)	1.187 lb (0.538 kg)	SUS4	0.5%		
METSEHDPM300A30	30 ft (9.14 m)	2.046 lb (0.928 kg)				
METSEHDPM300A30H	30 ft (9.14 m)	2.146 lb (0.973 kg)	SUN4	0.2%		
METSEHDPM300A60H	60 ft (18.29 m)	2.746 lb (1.245 kg)				
METSEHDPM300A60	60 ft (18.29 m)	2.645 lb (1.200 kg)	SUS4	0.5%		
METSEHD300A30	30 ft (9.14 m)	2.096 lb (0.951 kg)	SUSF (Small)	1.0%	300 A CT, 1 in x 1 in (2.54 cm x 2.54 cm)	
METSEHD300A60	60 ft (18.29 m)	1.646 lb (0.747 kg)				
METSEHD300A12	12 ft (3.66 m)	1.237 lb (0.561 kg)				
METSEHD300A12L	12 ft (3.66 m)	1.646 lb (0.747 kg)			300 A CT, 2 in x 2 in (5.08 cm x 5.08 cm)	
METSEHD300A30L	30 ft (9.14 m)	2.505 lb (1.136 kg)				
METSEHD300A60L	60 ft (18.29 m)	3.104 lb (1.408 kg)				
METSEHDP300A08H	8 ft (2.44 m)	1.996 lb (0.905 kg)	CTTB	0.2%	300 A CT	Solid-Core
METSEHDPM400A12	12 ft (3.66 m)	1.287 lb (0.584 kg)	SUS4	0.5%	400 A CT	Split-Core
METSEHDPM400A12H	12 ft (3.66 m)	1.387 lb (0.629 kg)	SUN4	0.2%		
METSEHDPM400A30	30 ft (9.14 m)	2.146 lb (0.973 kg)	SUS4	0.5%		
METSEHDPM400A30H	30 ft (9.14 m)	2.245 lb (1.018 kg)	SUN4	0.2%		
METSEHDPM400A60H	60 ft (18.29 m)	2.945 lb (1.290 kg)				
METSEHDPM400A60	60 ft (18.29 m)	2.744 lb (1.245 kg)	SUS4	0.5%		
METSEHD400A12L	12 ft (3.66 m)	1.856 lb (0.842 kg)	SUSF (Small)	1.0%	400 A CT, 2.5 in x 2.5 in (6.35 cm x 6.35 cm)	
METSEHD400A30L	30 ft (9.14 m)	2.714 lb (1.231 kg)				
METSEHD400A60L	60 ft (18.29 m)	3.313 lb (1.503 kg)				
METSEHDPM600A12	12 ft (3.66 m)	1.387 lb (0.629 kg)	SUS4	0.5%	600 A CT	
METSEHDPM600A30	30 ft (9.14 m)	2.305 lb (1.046 kg)				
METSEHDPM600A60	60 ft (18.29 m)	2.305 lb (1.046 kg)				

3 Ordering Information

CTs Compatible With HDPM6000 Head Unit, HDPM6000R Retrofit Module and I/O Module						
Commercial Reference / Model	**Lead Length**	**Weight**	**Form Factor**	**Accuracy**	**Description**	**Type of CT**
METSEHD600A30	30 ft (9.14 m)	2.535 lb (1.150 kg)	SUSF (Small)	1.0%	600 A CT, 3 in x 3 in (7.62 cm x 7.62 cm)	Split-Core
METSEHD600A60	60 ft (18.29 m)	3.133 lb (1.421 kg)				
METSEHD600A12	12 ft (3.66 m)	1.676 lb (0.760 kg)				
METSEHD800A30	30 ft (9.14 m)	2.934 lb (1.331 kg)			800 A CT, 4 in x 4 in (10.16 cm x 10.16 cm)	
METSEHD800A60	60 ft (18.29 m)	3.533 lb (1.603 kg)				
METSEHD800A12	12 ft (3.66 m)	2.075 lb (0.941 kg)				
METSEHD1000A30	30 ft (9.14 m)	2.934 lb (1.330 kg)			1000 A CT, 4 in x 4 in (10.16 cm x 10.16 cm)	
METSEHD1000A60	60 ft (18.29 m)	3.534 lb (1.602 kg)				
METSEHD1200A30	30 ft (9.14 m)	3.054 lb (1.385 kg)			1200 A CT, 4 in x 6 in (10.16 cm x 15.24 cm)	
METSEHD1200A60	60 ft (18.29 m)	3.654 lb (1.657 kg)				
METSEHD1600A30	30 ft (9.14 m)	3.173 lb (1.439 kg)	SUSF (Medium)	1.0%	1600 A CT, 4 in x 6 in (10.16 cm x 15.24 cm)	
METSEHD1600A60	60 ft (18.29 m)	3.773 lb (1.711 kg)				
METSEHD1600A30L	30 ft (9.14 m)	3.173 lb (1.439 kg)			1600 A CT, 4.5 in x 4.5 in (11.43 cm x 11.43 cm)	
METSEHD2000A30	30 ft (9.14 m)	4.650 lb (2.109 kg)	SUSF (Medium)	1.0%	2000 A CT, 4 in x 6 in (10.16 cm x 15.24 cm)	
METSEHD2000A60	60 ft (18.29 m)	5.250 lb (2.380 kg)				
METSEHD2000A30L	30 ft (9.14 m)	4.480 lb (2.032 kg)			2000 A CT, 6 in x 3 in (15.24 cm x 7.62 cm)	
METSEHD3000A30	30 ft (9.14 m)	4.271 lb (1.937 kg)	SUSF (Large)	1.0%	3000 A CT, 4 in x 4 in (10.16 cm x 10.16 cm)	
METSEHD3000A30L	30 ft (9.14 m)	4.430 lb (2.009 kg)			3000 A CT, 4 in x 6 in (10.16 cm x 15.24 cm)	
METSEHD3000A30XL	30 ft (9.14 m)	5.289 lb (2.399 kg)			3000 A CT, 5 in x 12 in (12.7 cm x 30.48 cm)	
METSEHD4000A30	30 ft (9.14 m)	5.289 lb (2.399 kg)			4000 A CT, 5 in x 12 in (12.7 cm x 30.48 cm)	

CTs Compatible With HDPM6000S and HDPM6000S24 Strip Modules						
Commercial Reference / Model	**Lead Length**	**Weight**	**Form Factor**	**Accuracy**	**Description**	**Type of CT**
METSEHDPM50A12P	12 in (30.48 cm)	0.101 lb (0.046 kg)	CTTA	0.2%	50 A CT, with connector, for use with 24 circuit strip module only	Solid-Core
METSEHDPM50A18P	18 in (45.72 cm)	0.104 lb (0.047 kg)				
METSEHDPM75A4	4 in (10.16 cm)	0.629 lb (0.285 kg)	CTMF	1.0%	75 A CT, with connector, for use with 21 circuit strip module only	Split-Core
METSEHDPM125A10	10 in (25.4 cm)	0.130 lb (0.059 kg)	CTTG	0.1%	125 A CT, with connector, for use with 21 circuit strip module only	Solid-Core
METSEHDPM125A4	4 in (10.16 cm)	0.130 lb (0.059 kg)				
METSEHDPM150A5	5 in (12.7 cm)	0.918 lb (0.416 kg)	SUS4	0.5%	150 A CT, with connector, for use with 21 circuit strip module only	Split-Core
METSEHDPM250AT12	12 ft (3.66 m)	0.500 lb (0.227 kg)	SUST	0.5%	250 A CT, without connector	Solid-Core
METSEHDPM250A2T12	12 ft (3.66 m)	0.551 lb (0.250 kg)	SUST2	0.5%	250 A CT, without connector	
METSEHDPM300A5	5 in (12.7 cm)	0.968 lb (0.439 kg)	SUS4	0.5%	300 A CT, with connector, for use with 21 circuit strip module only	Split-Core
METSEHDPM400A5	5 in (12.7 cm)	1.068 lb (0.484 kg)			400 A CT, with connector, for use with 21 circuit strip module only	
METSEHDPM500AT12	12 ft (3.66 m)	0.500 lb (0.227 kg)	SUST	0.5%	500 A CT, without connector	Solid-Core
METSEHDPM500A2T12	12 ft (3.66 m)	0.639 lb (0.290 kg)	SUST2	0.5%	500 A CT, without connector	
METSEHDP600A5	5 in (12.7 cm)	1.167 lb (0.529 kg)	SUS4	0.5%	600 A CT, with connector, for use with 21 circuit strip module only	Split-Core

CTs Compatible With HDPM6000B Busway Module						
Commercial Reference / Model	**Lead Length**	**Weight**	**Form Factor**	**Accuracy**	**Description**	**Type of CT**
METSEHDPM75A16	16 in (40.64 cm)	0.639 lb (0.290 kg)	CTMF	1.0%	75 A CT	Split-Core
METSEHDPM125A16	16 in (40.64 cm)	0.140 lb (0.064 kg)	CTTG	0.1%	125 A CT	Solid-Core
METSEHDPM150A16	16 in (40.64 cm)	0.928 lb (0.421 kg)	SUS4	0.5%	150 A CT	Split-Core
METSEHDPM300A16	16 in (40.64 cm)	0.978 lb (0.444 kg)			300 A CT	
METSEHDPM400A16	16 in (40.64 cm)	1.078 lb (0.489 kg)			400 A CT	
METSEHDP600A16	16 in (40.64 cm)	1.177 lb (0.534 kg)			600 A CT	

4 Application Diagram

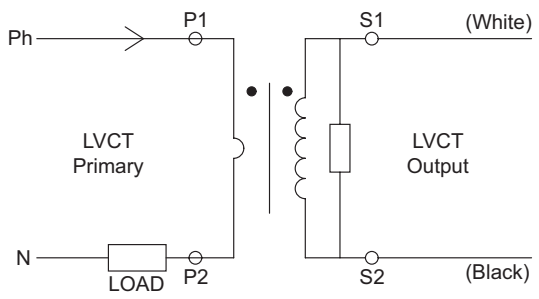

5 Specifications

Form Factor	Accuracy	Operating Temperature Range	Storage Temperature Range	Leads	Altitude of Operation	Installation Category	Agency Approvals
SUN2	0.2%	-40 °F to 131 °F (-40 °C to 55 °C)	-58 °F to 158 °F (-50 °C to 70 °C)	Black and white twisted pair 18 AWG, AWM, UL1015, 600 V, 221 °F (105 °C)	6561.68 ft (2000 m) max	Cat III, Pollution Degree 2	UL2808, CE
SUN3							
SUN4						Cat III, Pollution Degree 3	
SUS4	0.5%						
SUSF	1%	-40 °F to 158 °F (-40 °C to 70 °C)	-58 °F to 221 °F (-50 °C to 105 °C)			Cat IV, Pollution Degree 3	
CTMF	1%	-40 °F to 131 °F (-40 °C to 55 °C)	-58 °F to 140 °F (-50 °C to 60 °C)			Cat III, Pollution Degree 2	IEEE C57.13, CAN / CSA-C61869-1:14, CAN / CSA-C61869-2:14, CE
CTTG	0.1%	-40 °F to 185 °F (-40 °C to 85 °C)	-58 °F to 221 °F (-50 °C to 105 °C)		3280.84 ft (1000 m) max		UL2808 (Lead Length ≥ 4.92 ft (1.5 m)) or UL Recognized (Lead Length < 4.92 ft (1.5 m)), CE
SUST	0.5%	-40 °F to 131 °F (-40 °C to 55 °C)	-58 °F to 158 °F (-50 °C to 70 °C)		6561.68 ft (2000 m) max		UL2808, CE
CTTA	0.2%	-40 °F to 185 °F (-40 °C to 85 °C)	-40 °F to 185 °F (-40 °C to 85 °C)	Black and white twisted pair 24 AWG, AWM1901, 600 V, 392 °F (200 °C)			UL2808, CE
CTTB	0.2%			Black and white twisted pair 18 AWG, AWM1015, 600 V, 221 °F (105 °C)			UL Recognized, CE
SUST2	0.5%			Black and white twisted pair 18 AWG, AWM, UL1015, 600 V, 221 °F (105 °C)			UL2808, CE

Following specifications are common for all form factors:
Output at Rated Current: 0.25 VAC
Frequency Range: 50/60 Hz
Humidity Range: 0 to 95% noncondensing
Continuous Current Rating Factor: 1
Max. Voltage L-N Sensed Conductor: 600 VAC

6 Dimensions

SUN2, SUN3, SUN4 and SUS4

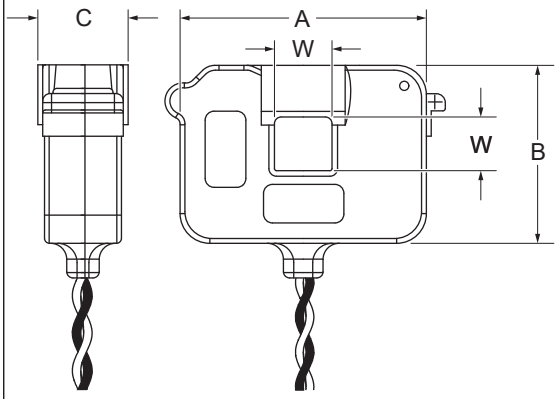

Model	W Window	A Dimension	B Dimension	C Dimension
SUN2	0.4 in (10.17 mm)	2.4 in (60.69 mm)	1.65 in (41.91 mm)	1.15 in (29.21 mm)
SUN3	0.7 in (17.80 mm)	3.0 in (76.19 mm)	2.4 in (60.96 mm)	1.17 in (29.72 mm)
SUN4	1.25 in (31.75 mm)	3.3 in (83.81 mm)	3.1 in (78.74 mm)	1.3 in (31.04 mm)
SUS4	1.25 in (31.75 mm)	3.3 in (83.81 mm)	3.1 in (78.74 mm)	1.3 in (31.04 mm)

SUSF

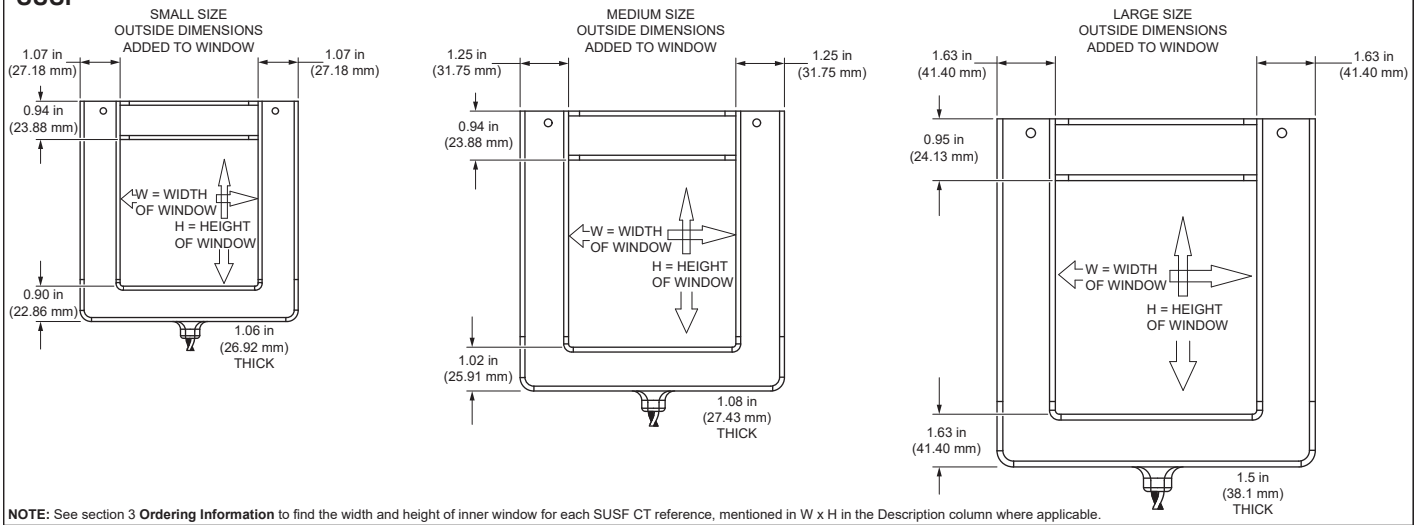

NOTE: See section 3 **Ordering Information** to find the width and height of inner window for each SUSF CT reference, mentioned in W x H in the Description column where applicable.

CTMF

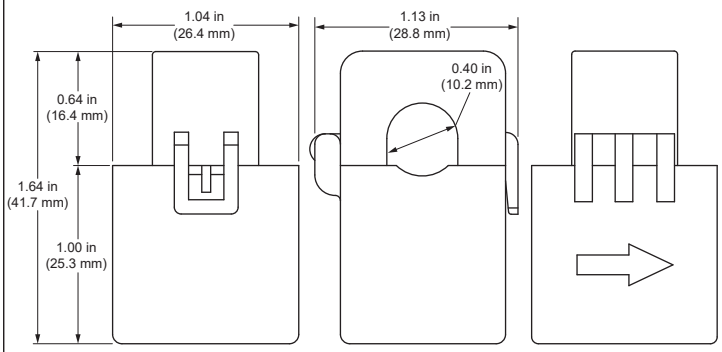

CTTG

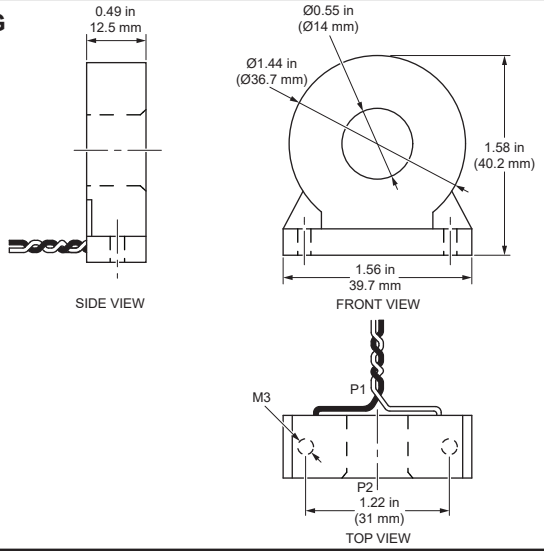

CTTA

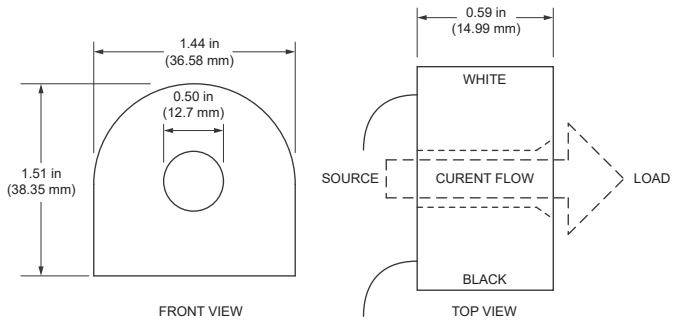

CTTB

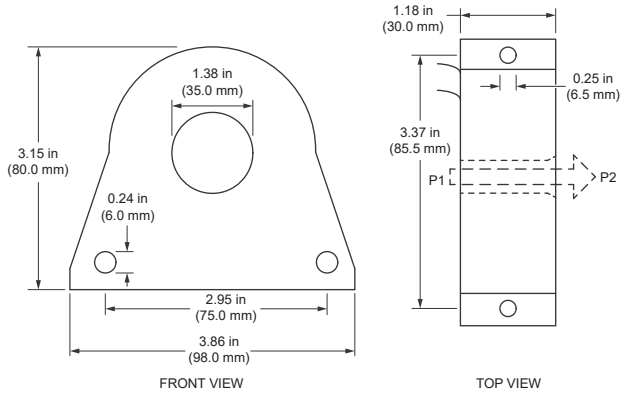

6 Dimensions

SUST

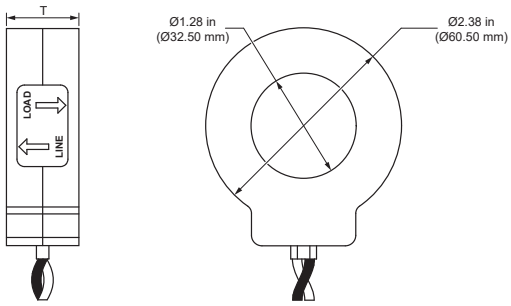

Amperage	T
250 A	0.69 in (17.50 mm)
500 A	0.88 in (22.50 mm)

SUST2

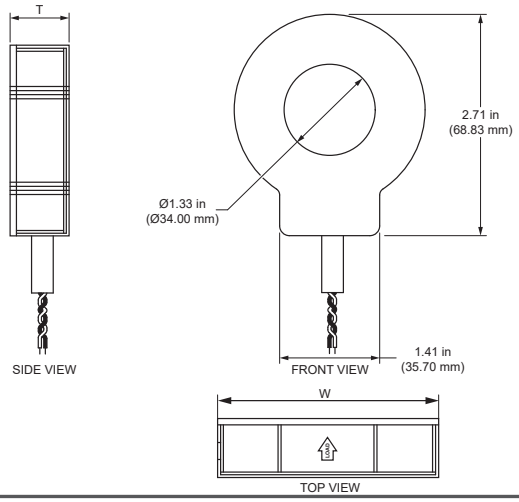

Amperage	T	W
250 A	0.70 in (18.00 mm)	2.52 in (64.00 mm)
500 A	1.37 in (35.00 mm)	2.40 in (61.00 mm)

7 Installation

Turn off and lock out power to the primary circuit before installing these CTs. Use a properly rated voltage sensing device to confirm that power is off.

NOTICE / AVIS

INCORRECT POLARITY OR CT WIRE MISCONNECTION / POLARITÉ INCORRECTE OU DEFAUT DE LA CONNEXION DU CAPTEUR DE COURANT

- Align CT arrow to point in the direction of the power flow. / Alignez la flèche du capteur de courant sur la direction du flux d'énergie.
- Paired lead wires must be kept together. / Les câbles de plomb appariés doivent être maintenus ensemble.
- Do not install CTs in a panel where they exceed 75% of the wiring space of any cross-sectional area within the panel. / N'installez pas les capteurs de courant dans un panneau où ils occupent plus de 75 % de l'espace de câblage dans une section transversale quelconque de ce panneau.
- Do not install CTs in areas of breaker arc venting. / N'installez pas les capteurs de courant dans les zones de ventilation de l'arc du disjoncteur.
- Do not install CTs using Class 2 wiring methods or connect to Class 2 equipment (NFPA 70). / N'installez pas les capteurs de courant en utilisant des méthodes de câblage de classe 2 ou en les connectant à des équipements de classe 2 (NFPA 70).
- Secure CTs and route conductors so that the conductors do not contact live terminals or bus. / Fixez les capteurs de courant et acheminez les conducteurs de manière à ce que les conducteurs n'entrent pas en contact avec les bornes sous tension ou le bus.

Failure to follow this instruction can result in incorrect readings or loss of data or damage to equipment. / Le non-respect de ces instructions peut entraîner des relevés de mesure incorrects, la perte de données ou l'endommagement de l'équipement.

Connect the transducer output leads to the meter inputs. Refer the wiring diagram in the installation guide for the appropriate module for details.

SUN2, SUN3, SUN4, SUS4, and SUSF Installation

Busbar and Phase Orientation

- The white mark ensures orientation every time the top is attached.
- The white mark is on the top right side when looking at the product label.
- Refer to label for correct CT orientation.

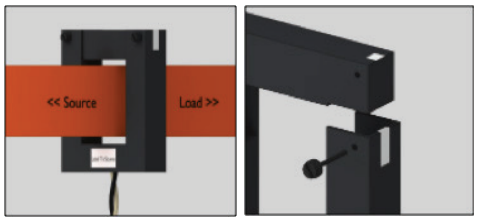

Proper Size and Fitting

- The window of the CT should be big enough to fit the busbar without excess space.
- A split-core CT should not be oversized around the bus/conductor, resulting in an inaccurate/bad reading.
- The busbar should also be in the center of the CT window to allow the coils to energize evenly.

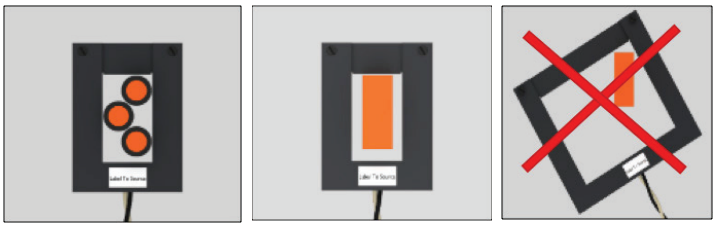

7 Installation

Installation

1. Remove the screws (or push-pins) from the CT and take the top off.
2. Slide the body of the CT over the busbar.

   NOTE: Refer to label for correct CT orientation.
3. Re-attach the top to the body of the CT, using the white mark to orient how the top will fit.
4. Place the screws/push-pins back to secure the top to the CT.
5. Terminate the leads to the metering device before turning on the power.

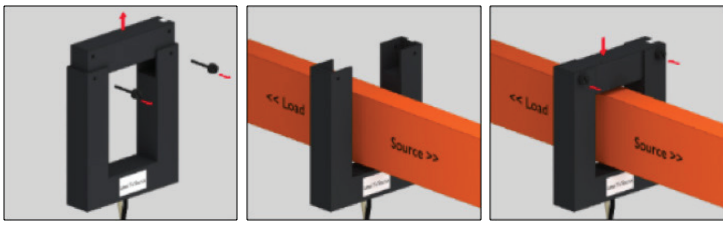

CTMF Installation

1. Release the clasp on one side of the CT and open it on the hinge.

   NOTE: Check the core ends on both sections of the CT to ensure there is no rust or debris in the closure areas. A label on the product indicates the source side. In the illustrated diagram, the arrow indicates the current flow (i.e., the label faces away from the circuit breaker).
2. Wrap the CT around the primary lead.
3. Close the CT until the clasp clicks into place to ensure that the contact surfaces are firmly seated.
4. Reconnect power to the panel.

   CTs may be simply hung on the wire on which they snap around. An alternative is the use of VELCRO® strips on the bottom or hinged side of the unit, to allow for ease of mounting and removal as necessary. VELCRO is non-conductive.

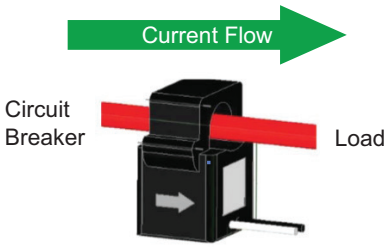

CTTA, CTTB, CTTG, SUST, and SUST2 Installation

1. Route the primary conductor through the center of the CT and complete the conductor connections.

   NOTE: A label on the product indicates the source side. All solid-core CT models should be oriented such that the wire leads face the source.
2. Reconnect power to the panel.

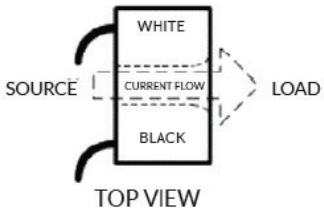

Note: Form factor is indicative, it may vary in actual.

Schneider Electric
35, rue Joseph Monier
92500 Rueil Malmaison
France
+33 (0) 1 41 29 70 00
www.se.com

Schneider Electric Limited
Stafford Park 5
Telford TF3 3BL
United Kingdom

Z208152-0F
© **2023** Schneider Electric. All rights reserved.
03/2023