Product data sheet

Specifications

TeSys Deca reversing contactor - 3P(3 NO) - AC-3 - <= 440 V 12 A - 110 V DC coil

LC2D12FD

Product availability: Stock - Normally stocked in distribution facility

Main

Range	TeSys TeSys Deca
Product name	TeSys Deca TeSys Deca
Product or Component Type	Reversing contactor
Device short name	LC2D
Contactor application	Motor control Resistive load
Utilisation category	AC-3 AC-1
Device presentation	Preassembled with reversing power busbar
Poles description	3P
power pole contact composition	3 NO
[Ue] rated operational voltage	Power circuit <= 690 V AC 25...400 Hz Power circuit <= 300 V DC
[Ie] rated operational current	25 A (at <140 °F (60 °C)) at <= 440 V AC AC-1 for power circuit 12 A (at <140 °F (60 °C)) at <= 440 V AC AC-3 for power circuit
Motor power kW	3 kW at 220...230 V AC 50 Hz 5.5 kW at 380...400 V AC 50 Hz 5.5 kW at 415...440 V AC 50 Hz 7.5 kW at 500 V AC 50 Hz 7.5 kW at 660...690 V AC 50 Hz
motor power HP (UL / CSA)	1 hp at 115 V AC 60 Hz for 1 phase motors 2 hp at 230/240 V AC 60 Hz for 1 phase motors 3 hp at 200/208 V AC 60 Hz for 3 phase motors 3 hp at 230/240 V AC 60 Hz for 3 phase motors 7.5 hp at 460/480 V AC 60 Hz for 3 phase motors 10 hp at 575/600 V AC 60 Hz for 3 phase motors
Control circuit type	DC standard
[Uc] control circuit voltage	110 V DC
Auxiliary contact composition	1 NO + 1 NC
[Uimp] rated impulse withstand voltage	6 kV IEC 60947
Overvoltage category	III
[Ith] conventional free air thermal current	10 A (at 140 °F (60 °C)) for signalling circuit 25 A (at 140 °F (60 °C)) for power circuit
Irms rated making capacity	250 A at 440 V for power circuit conforming to IEC 60947 140 A AC for signalling circuit conforming to IEC 60947-5-1 250 A DC for signalling circuit conforming to IEC 60947-5-1
Rated breaking capacity	250 A at 440 V for power circuit conforming to IEC 60947

Price is “List Price” and may be subject to a trade discount – check with your local distributor or retailer for actual price.

Disclaimer: This documentation is not intended as a substitute for and is not to be used for determining suitability or reliability of these products for specific user applications

[Icw] rated short-time withstand current	30 A 104 °F (40 °C) - 10 min for power circuit 61 A 104 °F (40 °C) - 1 min for power circuit 105 A 104 °F (40 °C) - 10 s for power circuit 210 A 104 °F (40 °C) - 1 s for power circuit 100 A - 1 s for signalling circuit 120 A - 500 ms for signalling circuit 140 A - 100 ms for signalling circuit
Associated fuse rating	10 A gG for signalling circuit conforming to IEC 60947-5-1 40 A gG at <= 690 V coordination type 1 for power circuit 25 A gG at <= 690 V coordination type 2 for power circuit
Average impedance	2.5 mOhm - Ith 25 A 50 Hz for power circuit
[Ui] rated insulation voltage	Power circuit 690 V IEC 60947-4-1 Power circuit 600 V CSA Power circuit 600 V UL Signalling circuit 690 V IEC 60947-1 Signalling circuit 600 V CSA Signalling circuit 600 V UL
Electrical durability	2 Mcycles 12 A AC-3 <= 440 V 0.8 Mcycles 25 A AC-1 <= 440 V
Power dissipation per pole	1.56 W AC-1 0.36 W AC-3
Front cover	With
Interlocking type	Mechanical
Mounting Support	Rail Plate
Standards	CSA C22.2 No 14 EN 60947-4-1 EN 60947-5-1 IEC 60947-4-1 IEC 60947-5-1 UL 508 IEC 60335-1
Product Certifications	DNV CSA CCC UL GL LROS (Lloyds register of shipping) BV RINA GOST UKCA
Connections - terminals	Power circuit screw clamp terminals 1 0.002…0.006 in² (1…4 mm²)flexible without cable end Power circuit screw clamp terminals 2 0.002…0.006 in² (1…4 mm²)flexible without cable end Power circuit screw clamp terminals 1 0.002…0.006 in² (1…4 mm²)flexible with cable end Power circuit screw clamp terminals 2 0.002…0.004 in² (1…2.5 mm²)flexible with cable end Power circuit screw clamp terminals 1 0.002…0.006 in² (1…4 mm²)solid Power circuit screw clamp terminals 2 0.002…0.006 in² (1…4 mm²)solid Control circuit screw clamp terminals 1 0.002…0.006 in² (1…4 mm²)flexible without cable end Control circuit screw clamp terminals 2 0.002…0.006 in² (1…4 mm²)flexible without cable end Control circuit screw clamp terminals 1 0.002…0.006 in² (1…4 mm²)flexible with cable end Control circuit screw clamp terminals 2 0.002…0.004 in² (1…2.5 mm²)flexible with cable end Control circuit screw clamp terminals 1 0.002…0.006 in² (1…4 mm²)solid Control circuit screw clamp terminals 2 0.002…0.006 in² (1…4 mm²)solid
Tightening torque	Power circuit 15.05 lbf.in (1.7 N.m) screw clamp terminals flat Ø 6 mm Power circuit 15.05 lbf.in (1.7 N.m) screw clamp terminals Philips No 2 Control circuit 15.05 lbf.in (1.7 N.m) screw clamp terminals flat Ø 6 mm Control circuit 15.05 lbf.in (1.7 N.m) screw clamp terminals Philips No 2 Control circuit 15.05 lbf.in (1.7 N.m) screw clamp terminals pozidriv No 2 Power circuit 22.1 lbf.in (2.5 N.m) screw clamp terminals pozidriv No 2

Operating time	53.55...72.45 ms closing 16...24 ms opening
Safety reliability level	B10d = 1369863 cycles contactor with nominal load EN/ISO 13849-1 B10d = 20000000 cycles contactor with mechanical load EN/ISO 13849-1
Mechanical durability	30 Mcycles
Maximum operating rate	3600 cyc/h 140 °F (60 °C)

Complementary

Coil technology	Built-in bidirectional peak limiting diode suppressor
Control circuit voltage limits	0.1...0.25 Uc (-40…158 °F (-40…70 °C)):drop-out DC 0.7...1.25 Uc (-40…140 °F (-40…60 °C)):operational DC 1...1.25 Uc (140…158 °F (60…70 °C)):operational DC
Time constant	28 ms
Inrush power in W	5.4 W 68 °F (20 °C))
Hold-in power consumption in W	5.4 W 68 °F (20 °C)
Auxiliary contacts type	Mechanically linked 1 NO + 1 NC IEC 60947-5-1 Mirror contact 1 NC IEC 60947-4-1
Signalling circuit frequency	25...400 Hz
Minimum switching current	5 mA for signalling circuit
Minimum switching voltage	17 V for signalling circuit
Non-overlap time	1.5 ms on de-energisation between NC and NO contact 1.5 ms on energisation between NC and NO contact
Insulation resistance	> 10 MOhm for signalling circuit

Environment

IP degree of protection	IP20 front face IEC 60529
Climatic withstand	IACS E10 IEC 60947-1 Annex Q category D
Protective treatment	TH IEC 60068-2-30
Pollution degree	3
Ambient air temperature for operation	-40…140 °F (-40…60 °C) 140…158 °F (60…70 °C) with derating
Ambient Air Temperature for Storage	-76…176 °F (-60…80 °C)
Operating altitude	0...9842.52 ft (0...3000 m)
Fire resistance	1562 °F (850 °C) IEC 60695-2-1
Flame retardance	V1 conforming to UL 94
Mechanical robustness	Vibrations contactor open2 Gn, 5...300 Hz Vibrations contactor closed4 Gn, 5...300 Hz Shocks contactor open10 Gn for 11 ms Shocks contactor closed15 Gn for 11 ms
Height	3.03 in (77 mm)
Width	3.5 in (90 mm)
Depth	3.7 in (95 mm)
Net Weight	2.264 lb(US) (1.027 kg)

Ordering and shipping details

Category	US10I1222355

Discount Schedule	0I12
GTIN	03389110392296
Returnability	Yes
Country of origin	ID

Packing Units

Unit Type of Package 1	PCE
Nbr. of units in pkg.	1
Package 1 Height	3.74 in (9.500 cm)
Package 1 Width	4.57 in (11.600 cm)
Package 1 Length	5.59 in (14.200 cm)
Package weight(Lbs)	2.452 lb(US) (1.112 kg)

Contractual warranty

Warranty	18 months

Environmental Data

Schneider Electric aims to achieve Net Zero status by 2050 through supply chain partnerships, lower impact materials, and circularity via our ongoing “Use Better, Use Longer, Use Again” campaign to extend product lifetimes and recyclability.

Environmental Data explained >

How we assess product sustainability >

Environmental footprint

Carbon footprint (kg CO2 eq, Total Life cycle)	75
Environmental Disclosure	Product Environmental Profile

Use Better

Materials and Substances

Packaging made with recycled cardboard	Yes
Packaging without single use plastic	Yes
EU RoHS Directive	Compliant with Exemptions
SCIP Number	50ae7612-fd2e-41e4-a369-50d0dea6e592
REACh Regulation	REACh Declaration
California proposition 65	WARNING: This product can expose you to chemicals including: Antimony oxide & Antimony trioxide, which is known to the State of California to cause cancer. For more information go to www.P65Warnings.ca.gov
PVC free	Yes

Use Again

Repack and remanufacture

Circularity Profile	End of Life Information
Take-back	No
WEEE Label	The product must be disposed on European Union markets following specific waste collection and never end up in rubbish bins.

Technical Illustration
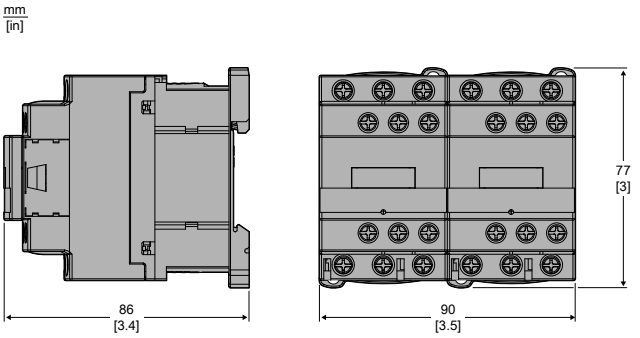
Assembly's dimensions