Product data sheet

Specifications

discrete output module, Modicon X80, 64 transistor outputs, 24V DC positive

BMXDDO6402K

Product availability: Stock - Normally stocked in distribution facility

Main

Range of Product	Modicon X80
Product or Component Type	Discrete output module
Discrete output number	64 EN/IEC 61131-2
Discrete output type	Solid state
Discrete output logic	Positive
Discrete output voltage	24 V 19...30 V DC
Discrete output current	0.1 A

Complementary

Current per channel	0.125 A
Maximum current per module	6.4 A
Insulation resistance	> 10 MOhm 500 V DC
Power dissipation in W	6.85 W
Response time on output	1.2 ms
Paralleling of outputs	Yes : 3 maximum
Typical current consumption	160 mA 3.3 V DC
MTBF reliability	150000 H
Protection type	External fuse reverse polarity protection short-circuit protection overload protection overvoltage protection
Output overload protection	With current limiter With electronic circuit breaker 0.125 A < Id < 0.185 A
Output overvoltage protection	With transil diode
Output short-circuit protection	With 2 A external fuse
Reverse polarity protection	Reverse mounted diode
Voltage detection threshold	< 14 V DC preactuator fault > 18 V DC preactuator at state 0
Maximum tungsten load	1.2 W
Switching frequency	0.5/LI² Hz
Maximum overload time	15 ms
Load impedance ohmic	>= 220 Ohm

Price is “List Price” and may be subject to a trade discount – check with your local distributor or retailer for actual price.

Disclaimer: This documentation is not intended as a substitute for and is not to be used for determining suitability or reliability of these products for specific user applications

Status LED	1 LED (Green) +32 channels indicator 1 LED (Green) module operating (RUN) 1 LED per channel (Green) channel diagnostic 1 LED (Red) module error (ERR) 1 LED (Red) module I/O
Net Weight	0.33 lb(US) (0.15 kg)

Environment

IP Degree of Protection	IP20
Directives	2014/35/EU - low voltage directive 2014/30/EU - electromagnetic compatibility
Dielectric strength	1500 V AC 50/60 Hz 1 minute, output/ground 1500 V AC 50/60 Hz 1 minute, output/internal logic 500 V DC 1 minute, between group of channels
Vibration resistance	3 gn
Shock resistance	30 gn
Ambient Air Temperature for Storage	-40…185 °F (-40…85 °C)
Ambient Air Temperature for Operation	32…140 °F (0…60 °C)
Relative humidity	5…95 % 131 °F (55 °C) without condensation
Operating altitude	0...6561.68 ft (0...2000 m) 2000...5000 m with derating factor

Ordering and shipping details

Category	US1PC3418160
Discount Schedule	PC34
GTIN	3595863910490
Returnability	Yes
Country of origin	ID

Packing Units

Unit Type of Package 1	PCE
Number of Units in Package 1	1
Package 1 Height	2.28 in (5.800 cm)
Package 1 Width	4.45 in (11.300 cm)
Package 1 Length	4.45 in (11.300 cm)
Package 1 Weight	6.349 oz (180.000 g)
Unit Type of Package 2	S02
Number of Units in Package 2	15
Package 2 Height	5.91 in (15.000 cm)
Package 2 Width	11.81 in (30.000 cm)
Package 2 Length	15.75 in (40.000 cm)
Package 2 Weight	6.801 lb(US) (3.085 kg)

Contractual warranty

Warranty	18 months

Environmental Data

Schneider Electric aims to achieve Net Zero status by 2050 through supply chain partnerships, lower impact materials, and circularity via our ongoing “Use Better, Use Longer, Use Again” campaign to extend product lifetimes and recyclability.

Environmental Data explained >

How we assess product sustainability >

Environmental footprint

Carbon footprint (kg CO2 eq, Total Life cycle)	53
Environmental Disclosure	Product Environmental Profile

Use Better

Materials and Substances

Packaging made with recycled cardboard	Yes
Packaging without single use plastic	Yes
EU RoHS Directive	Pro-active compliance (Product out of EU RoHS legal scope)
SCIP Number	E9e954e9-6f86-4d0f-b61c-767620a2bb40
REACh Regulation	REACh Declaration
California proposition 65	WARNING: This product can expose you to chemicals including: Lead and lead compounds, which is known to the State of California to cause cancer and birth defects or other reproductive harm. For more information go to www.P65Warnings.ca.gov

Use Again

Repack and remanufacture

Circularity Profile	End of Life Information
Take-back	No
WEEE	The product must be disposed on European Union markets following specific waste collection and never end up in rubbish bins.

Dimensions Drawings

Modules Mounted on Racks

Dimensions

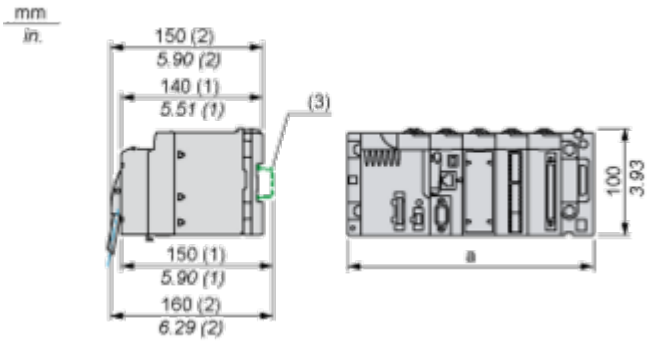

(1) With removable terminal block (cage, screw or spring).
(2) With FCN connector.
(3) On AM1 ED rail: 35 mm wide, 15 mm deep. Only possible with BMXXBP0400/0400H/0600/0600H/0800/0800H rack.

Rack references	a in mm	a in in.
BMXXBP0400 and BMXXBP0400H	242.4	09.54
BMXXBP0600 and BMXXBP0600H	307.6	12.11
BMXXBP0800 and BMXXBP0800H	372.8	14.68
BMXXBP1200 and BMXXBP1200H	503.2	19.81

Connections and Schema

Connecting the Module

Output Circuit Diagram

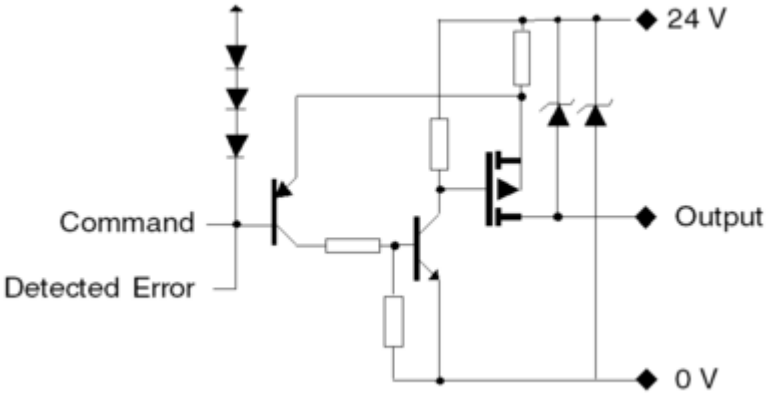

Module Connection

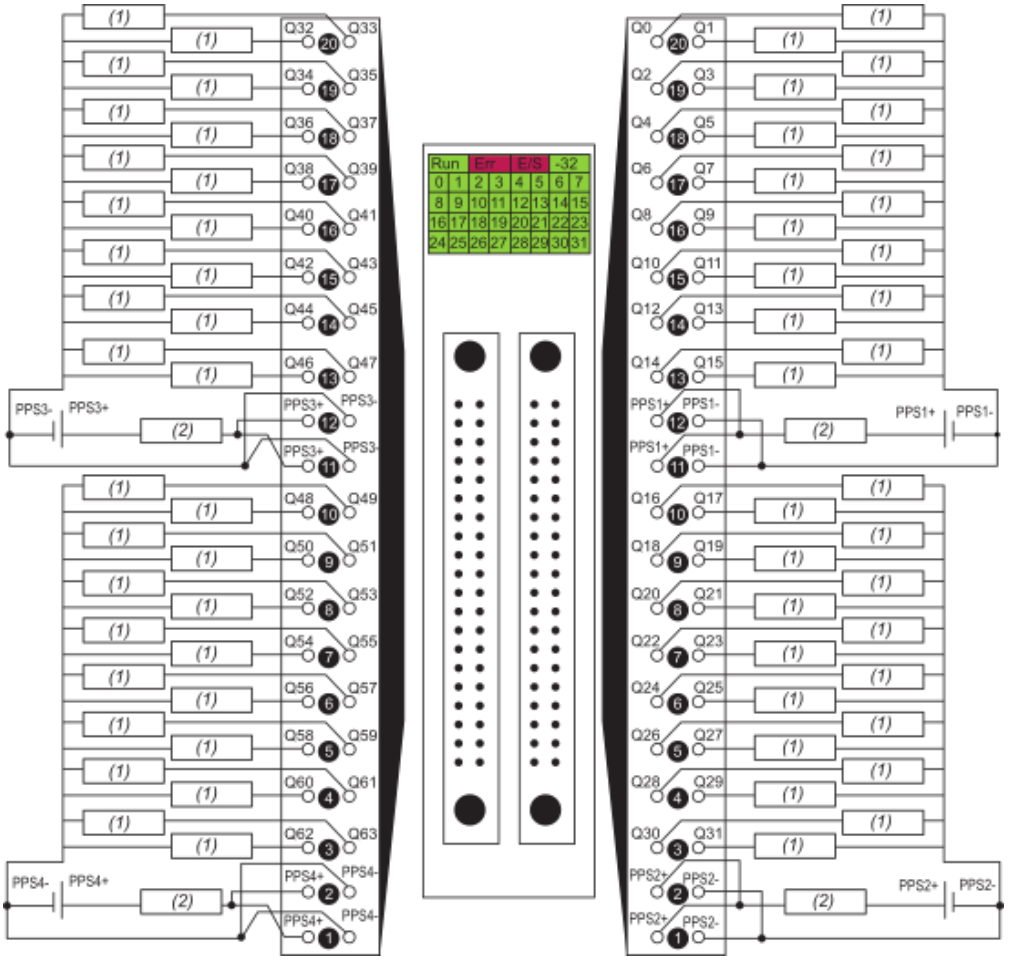

(1) pre-actuator
(2) fuse: fast blow fuse of 2 A for each 16-channel group
power supply 24 VDC
PPS pre-actuator power supply

Image of product / Alternate images

Alternative

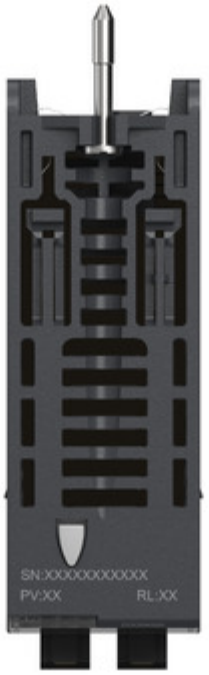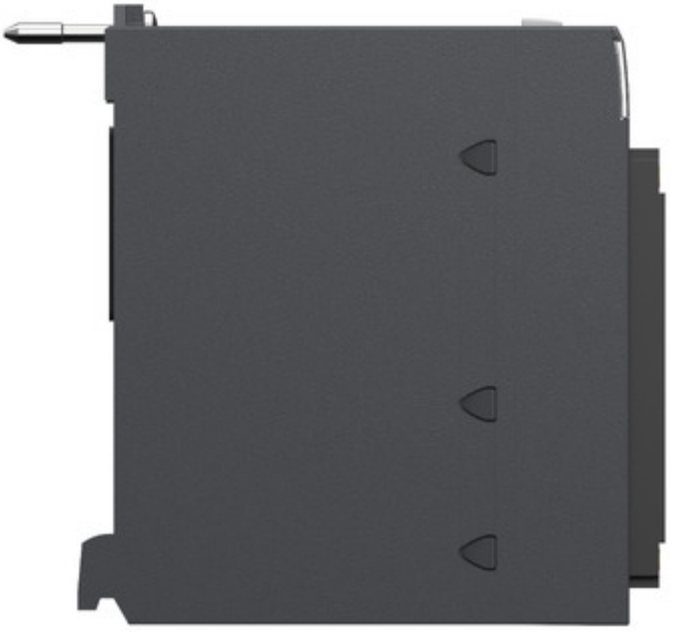
SN:XXXXXXXXXXXX
PV:XX
RL:XX