Product data sheet

Specifications

Transformer, Type T, industrial control, 50VA, 1 phase, 208/230/460V primary, 115V secondary, 55C rise

9070T50D20

Product availability: Stock - Normally stocked in distribution facility

Main

Product Type	Industrial Control Transformer
Type	T

Complementary

Number of Phases	1 phase
Power Rating	50 VA UL 50 VA CSA 50 VA NOM 50 VA CE
Primary to Secondary Voltage	208/230/460 V 115 V
Temperature Rise	55 °C
Electrical Connection	Screw clamp terminals
Height	2.89 in (73.41 mm)
Width	3.38 in (85.85 mm)
Depth	3.34 in (84.84 mm)
Material	Copper: winding
Fingersafe Cover Compatibility	FSC1

Environment

Certifications	UL listed file E61239 CSA file LR37055 guide 184-N-90
Enclosure Type	Not rated (open device)
Insulation Temperature	221 °F (105 °C)

Ordering and shipping details

Category	US10CP816200
Discount Schedule	0CP8
GTIN	785901904953
Returnability	Yes
Country of origin	MX

Packing Units

Unit Type of Package 1	PCE

Price is “List Price” and may be subject to a trade discount – check with your local distributor or retailer for actual price.

Disclaimer: This documentation is not intended as a substitute for and is not to be used for determining suitability or reliability of these products for specific user applications

Nbr. of units in pkg.	1
Package 1 Height	3.80 in (9.652 cm)
Package 1 Width	4.20 in (10.668 cm)
Package 1 Length	4.10 in (10.414 cm)
Package weight(Lbs)	3.829 lb(US) (1.737 kg)

Contractual warranty

Warranty	10 Years

Environmental Data

Schneider Electric aims to achieve Net Zero status by 2050 through supply chain partnerships, lower impact materials, and circularity via our ongoing “Use Better, Use Longer, Use Again” campaign to extend product lifetimes and recyclability.

Environmental Data explained

How we assess product sustainability

Environmental footprint

Environmental Disclosure	Product Environmental Profile

Use Better

Materials and Substances

Packaging made with recycled cardboard	Yes
Packaging without single use plastic	No
EU RoHS Directive	Compliant with Exemptions
REACh Regulation	REACh Declaration
California proposition 65	WARNING: This product can expose you to chemicals including: Phenyl glycidyl ether, which is known to the State of California to cause cancer and birth defects or other reproductive harm. For more information go to www.P65Warnings.ca.gov
PVC free	Yes

Use Again

Repack and remanufacture

Circularity Profile	No need of specific recycling operations
Take-back	No

Technical Illustration

Dimensions

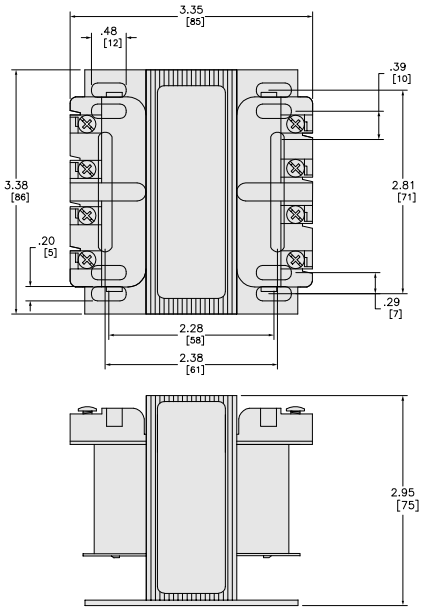

in.
[mm]

Catalog Numbers

9070T50D18
9070T50D20
9070T50D32
9070T50D51
9070T50D95

Technical Illustration

Wiring diagram

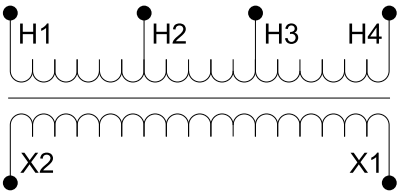

Options

Voltage Code	Voltages		Connections	
	Primary	Secondary	Primary	Secondary
D20	208/230/460	115	208: Connect to H1 and H2 230: Connect to H1 and H3 460: Connect to H1 and H4	Connect to X1 and X2

REFER TO TECHNICAL DOCUMENTATION FOR COMPLETE INFORMATION.