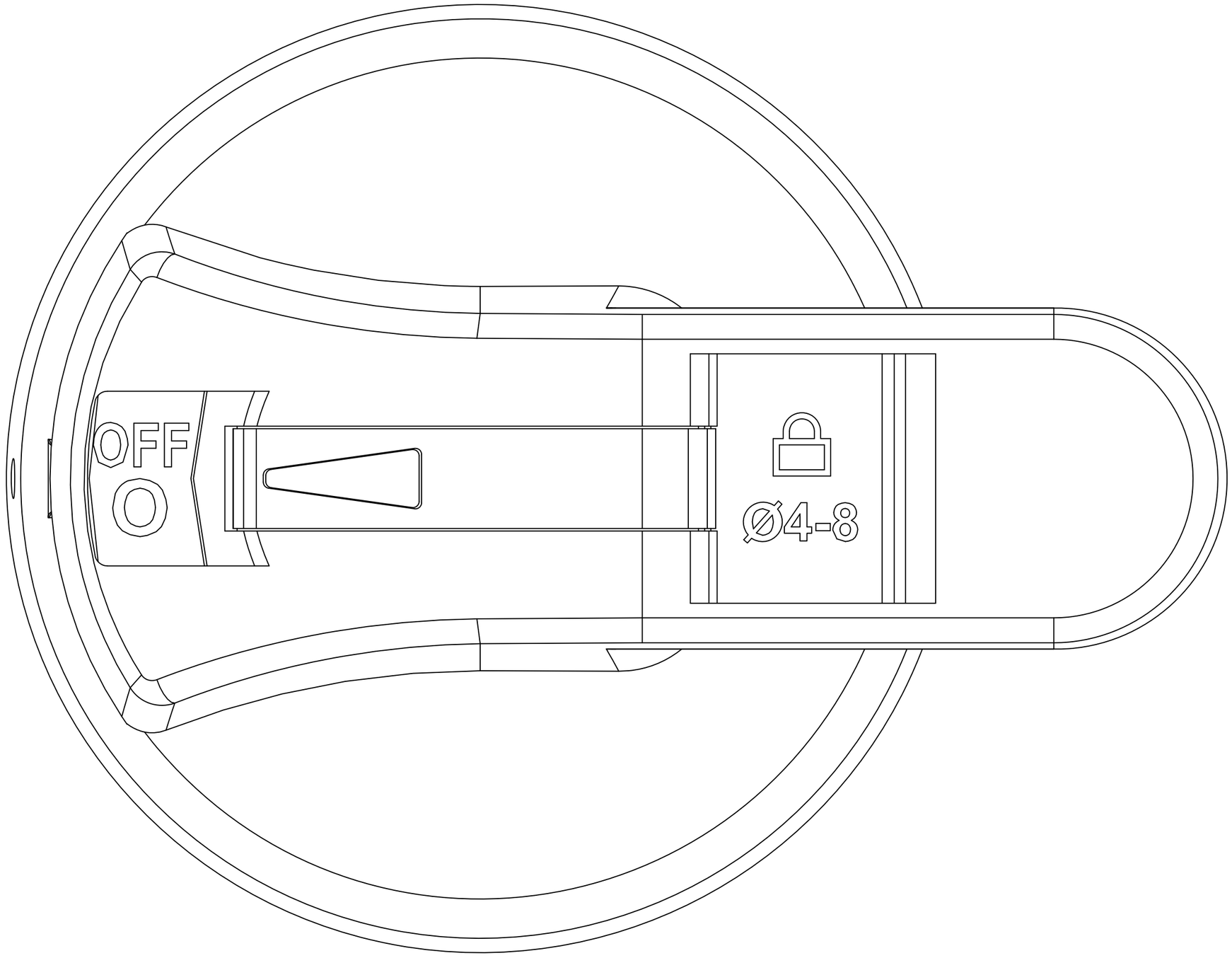
OFF
Ø4-8