PrismaSeT HD / 6300

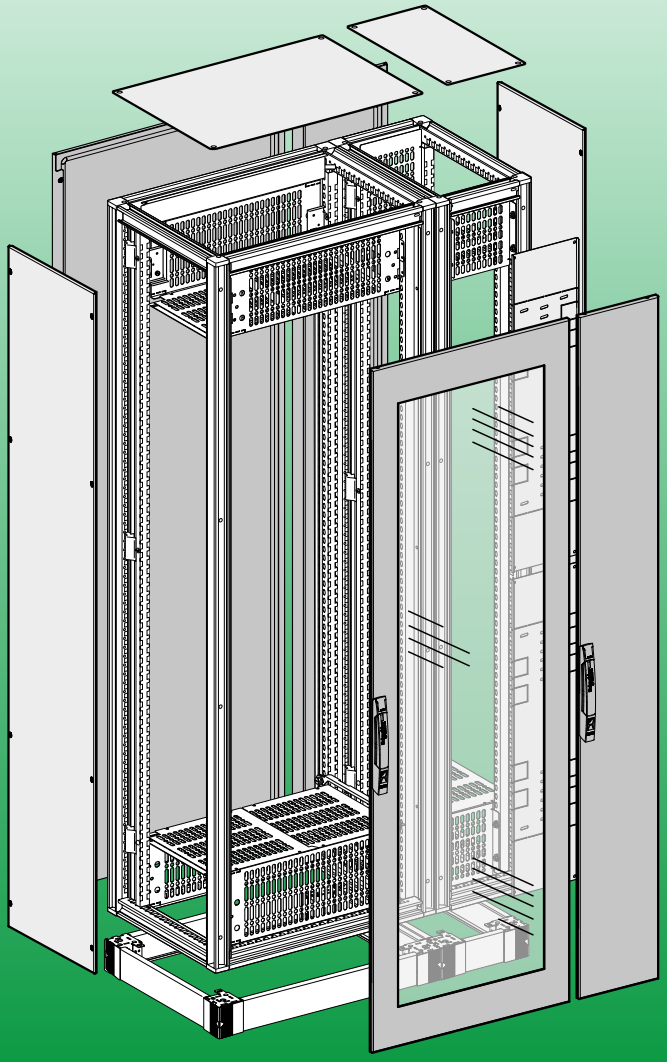

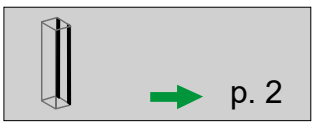
p. 2

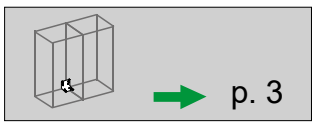
p. 3

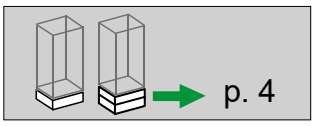
p. 4

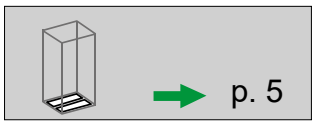
p. 5

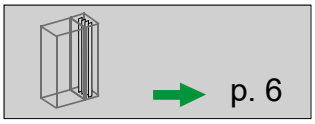
p. 6

p. 11

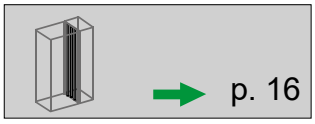
p. 16

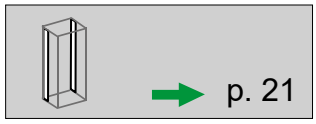
p. 21

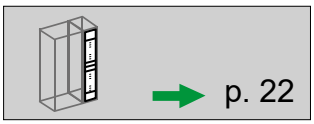
p. 22

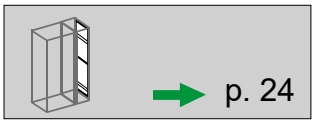
p. 24

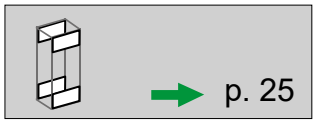
p. 25

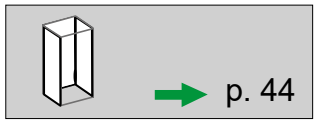
p. 44

p. 44

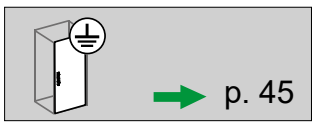
p. 45

p. 46

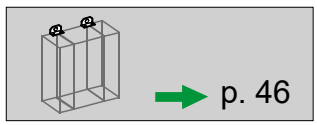
p. 46

JYT7854201-01

Schneider Electric

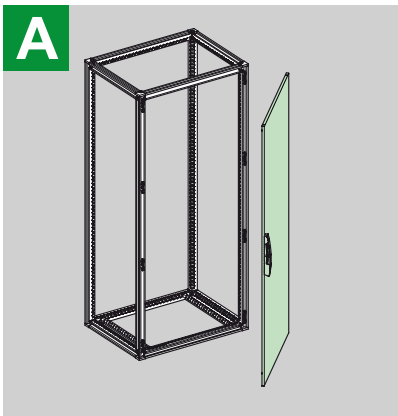
A

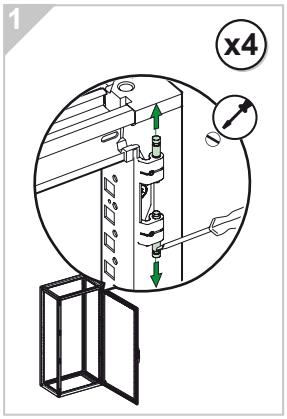
1
x4

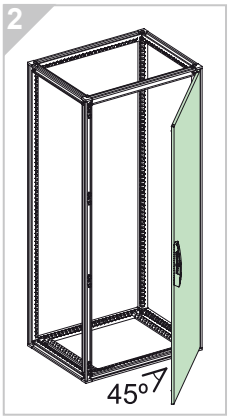
2
45°

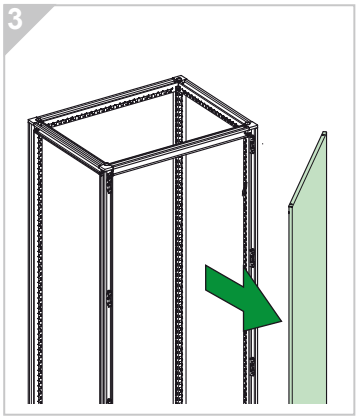
3

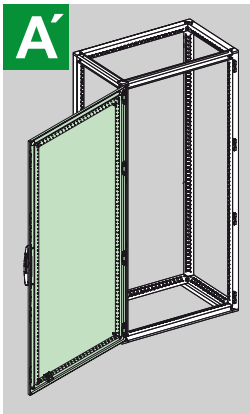
A´

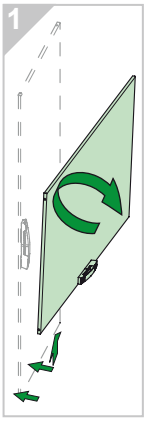
1

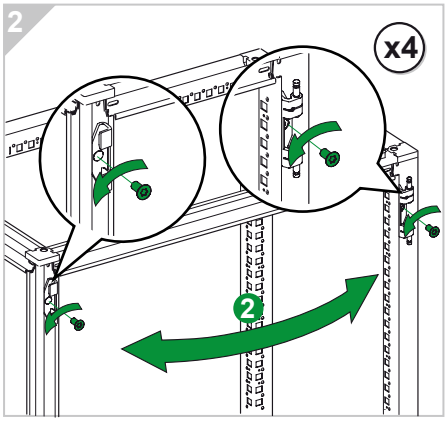
2
x4
2

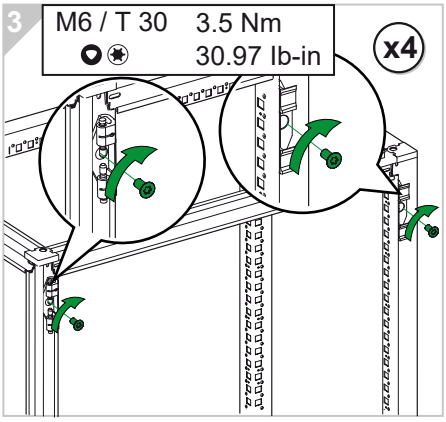
3
M6 / T 30
3.5 Nm
30.97 lb-in
x4

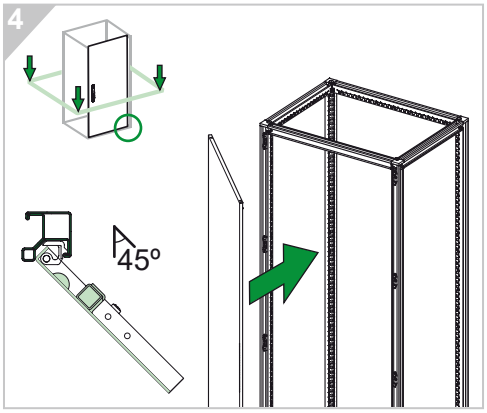
4
45°

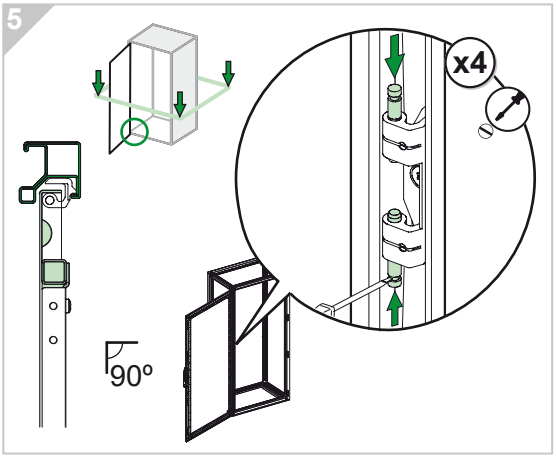
5
x4
90°

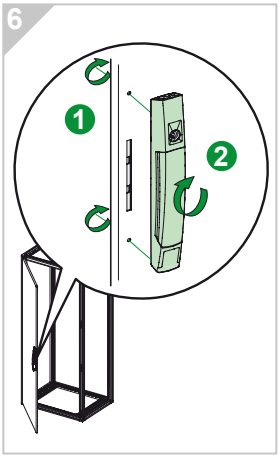
6
1
2

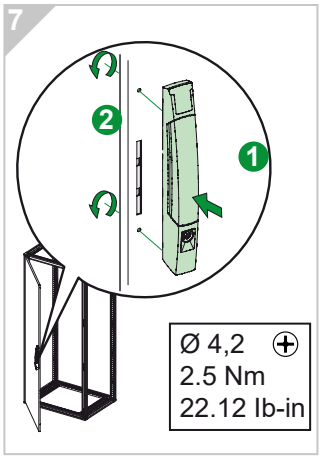
7
2
1
Ø 4,2
2.5 Nm
22.12 lb-in

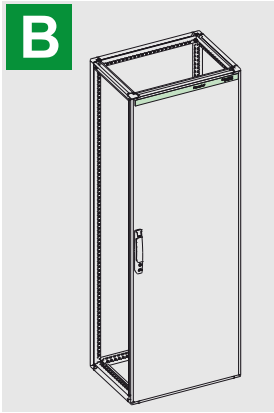
B

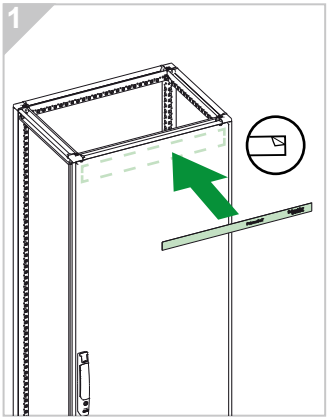
1

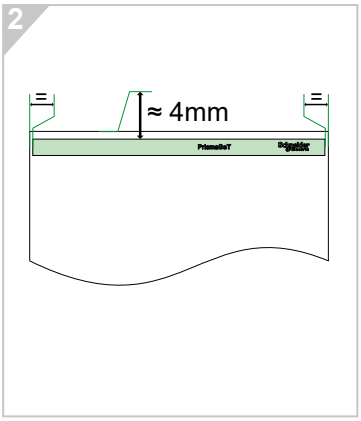
2
≈ 4mm

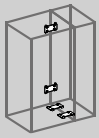

NSYSFBK19

A

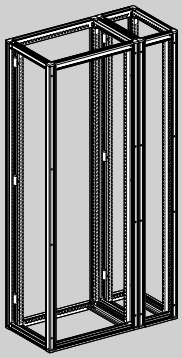

1

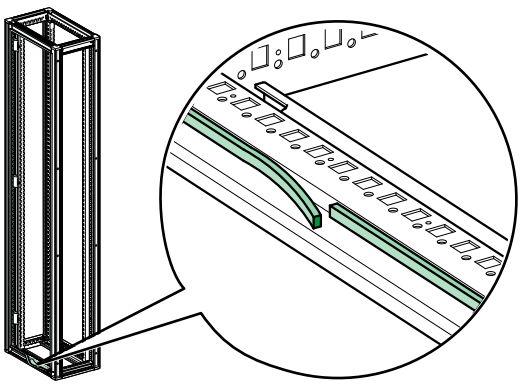

2

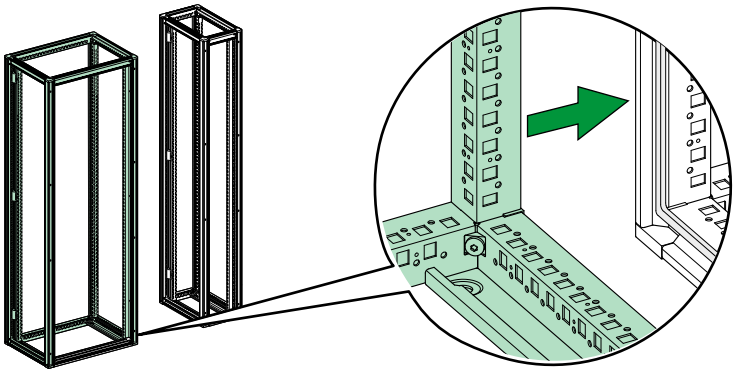

3

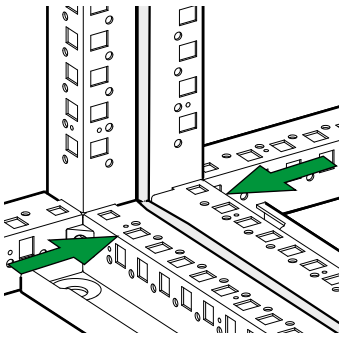

4

x4

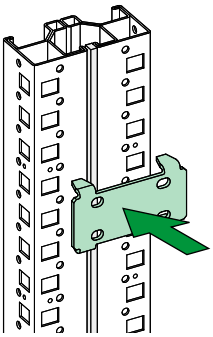

5

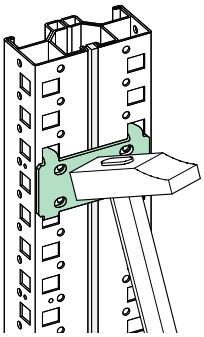

6

x4

M6 / T 30

4.5 Nm

39.82 lb-in

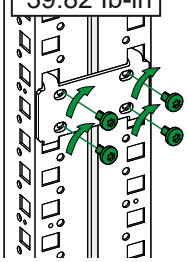

7

x4

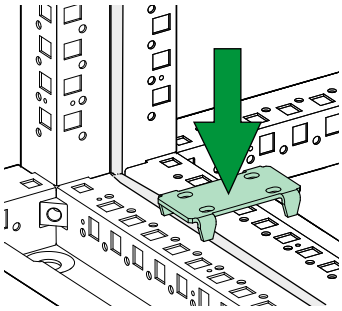

8

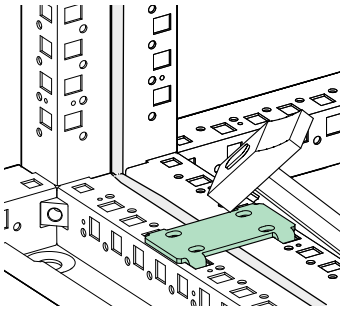

9

x4

M6 / T 30 4.5 Nm

39.82 lb-in

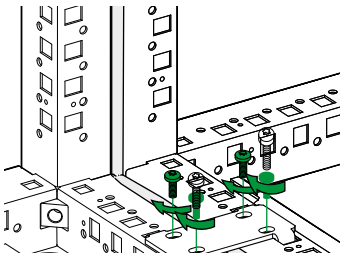

NSYSPF7100 NSYSPS5100
NSYSPF3100 NSYSPS6100
NSYSPS8100

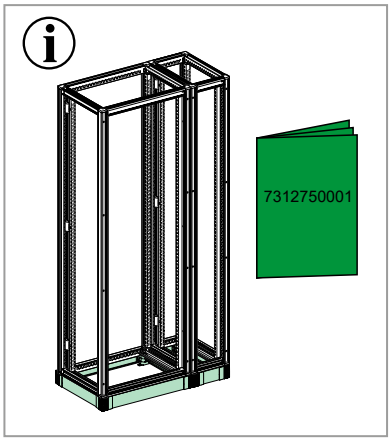

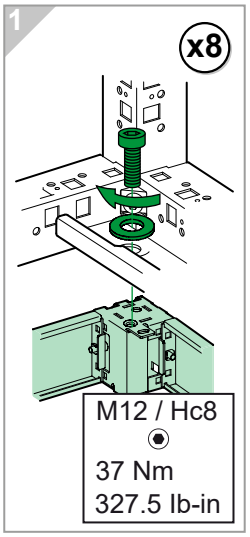

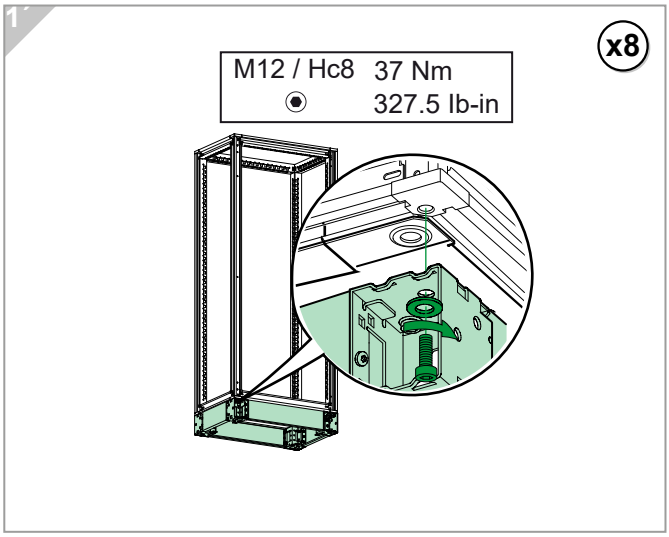

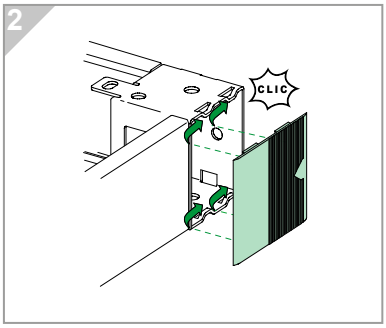

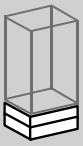

NSYSPF7200 NSYSPS5200
NSYSPF3200 NSYSPS6200
NSYSPS8200

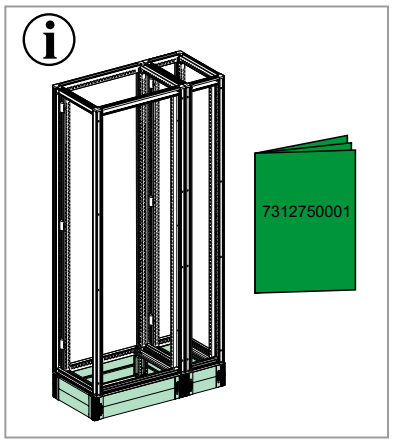

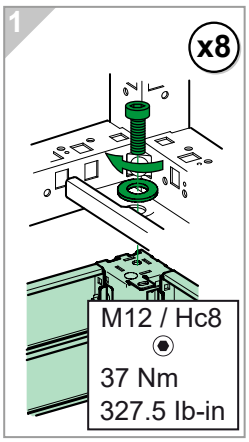

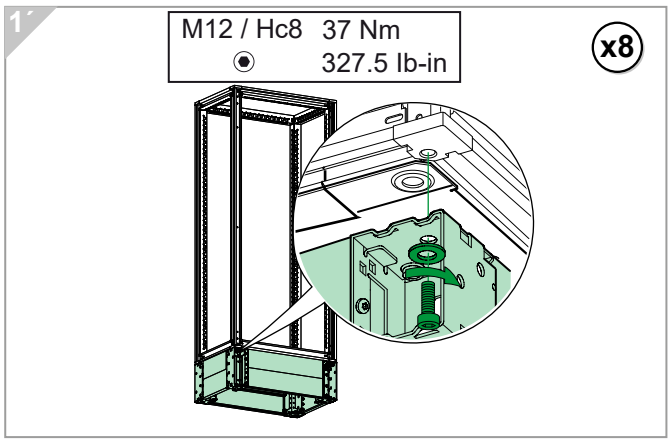

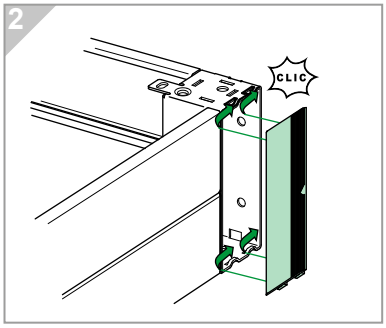

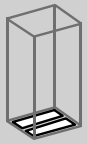

NSYEC751 NSYEC351
NSYEC761 NSYEC361
NSYEC781 NSYEC381

A

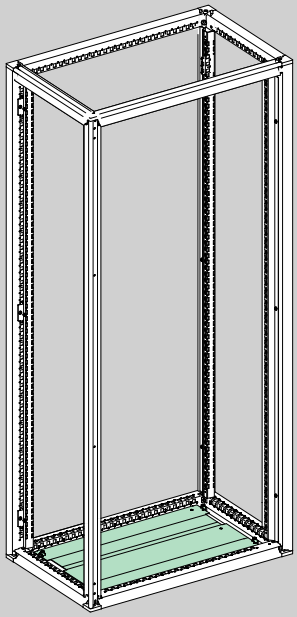

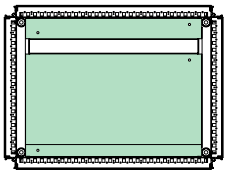

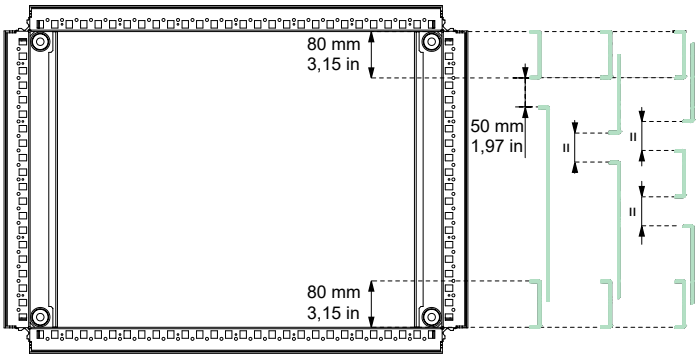

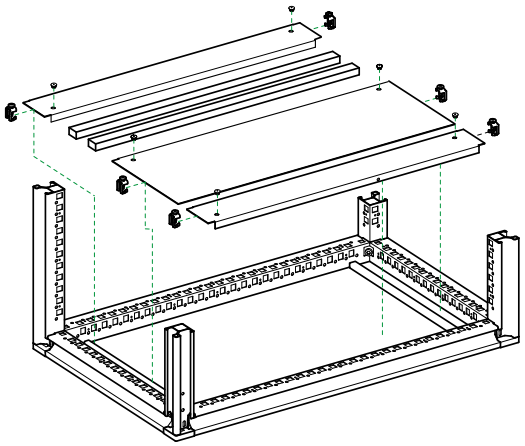

1

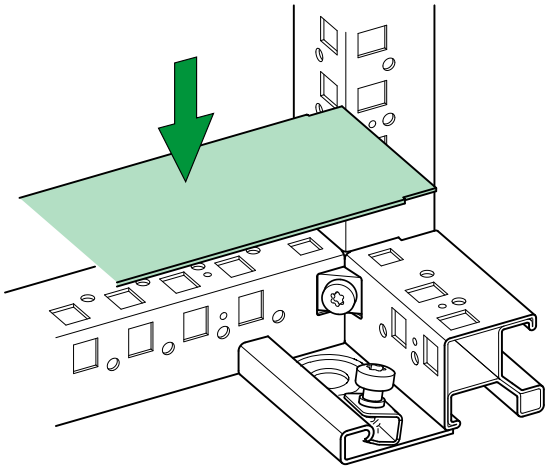

2

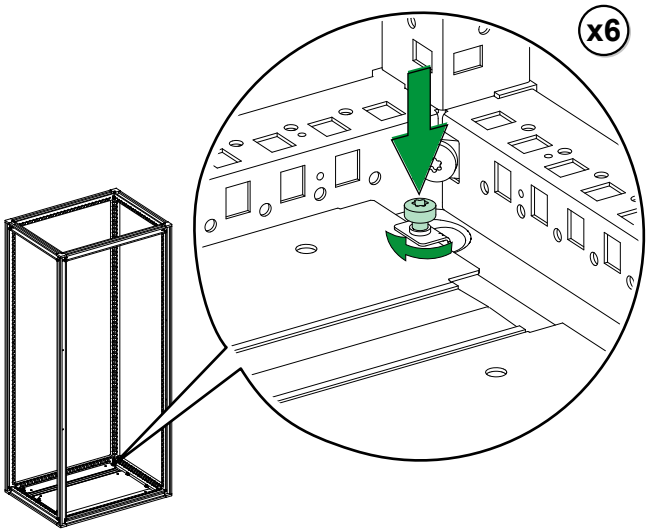

M6 / T 30	2.5 Nm
	22.12 lb-in

500mm
700 mm
NSYSFP207*
600 mm
800 mm
700 mm
NSYSFP207*
500 mm
600 mm
800 mm
300 mm
NSYSF203*

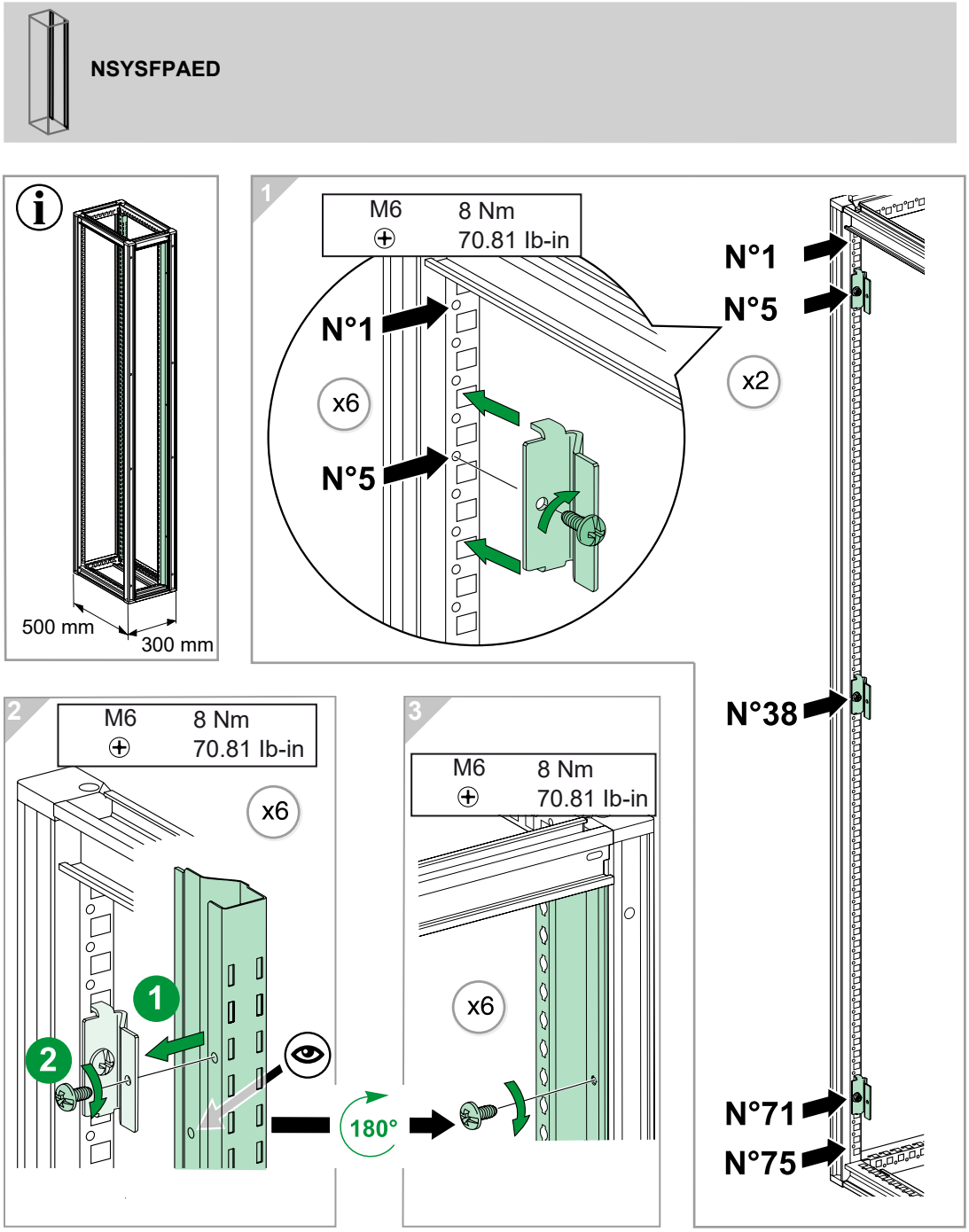
NSYSFPAED
500 mm
300 mm
1
M6 8 Nm
70.81 lb-in
N°1
x6
N°5
N°1
N°5
x2
N°38
N°71
N°75
2
M6 8 Nm
70.81 lb-in
x6
1
2
3
M6 8 Nm
70.81 lb-in
x6
180°

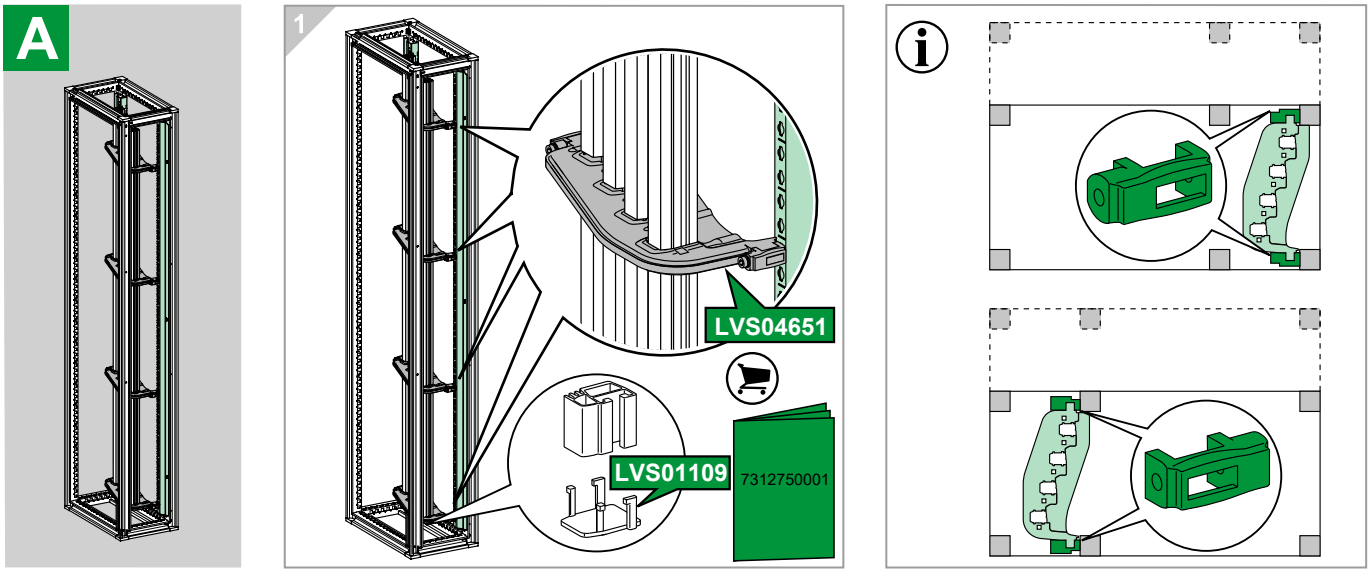
A
1
LVS04651
LVS01109
7312750001

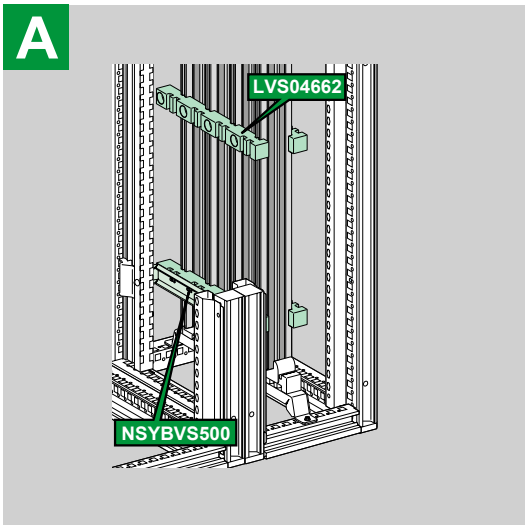
A
LVS04662
NSYBVS500

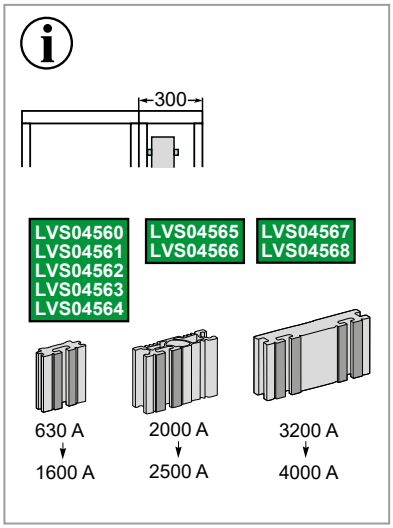
300
LVS04560
LVS04561
LVS04562
LVS04563
LVS04564
LVS04565
LVS04566
LVS04567
LVS04568
630 A
1600 A
2000 A
2500 A
3200 A
4000 A

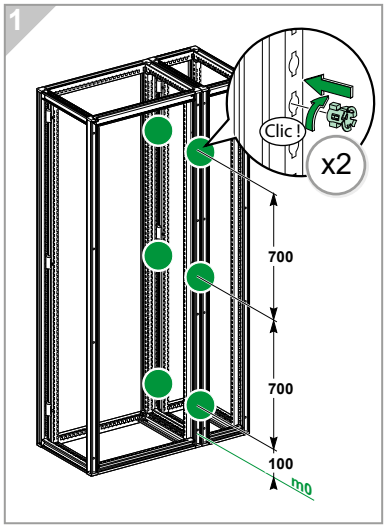
1
Clic !
x2
700
700
100

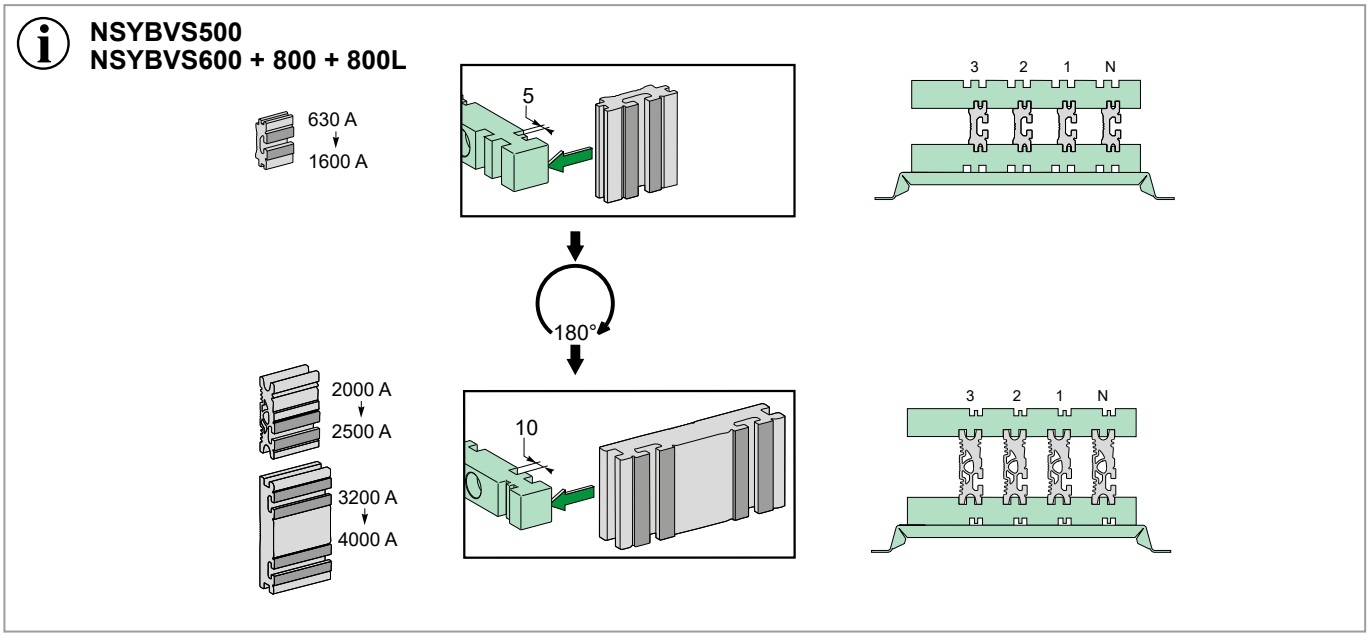
NSYBVS500
NSYBVS600 + 800 + 800L
630 A
1600 A
5
3 2 1 N
180°
2000 A
2500 A
3200 A
4000 A
10
3 2 1 N

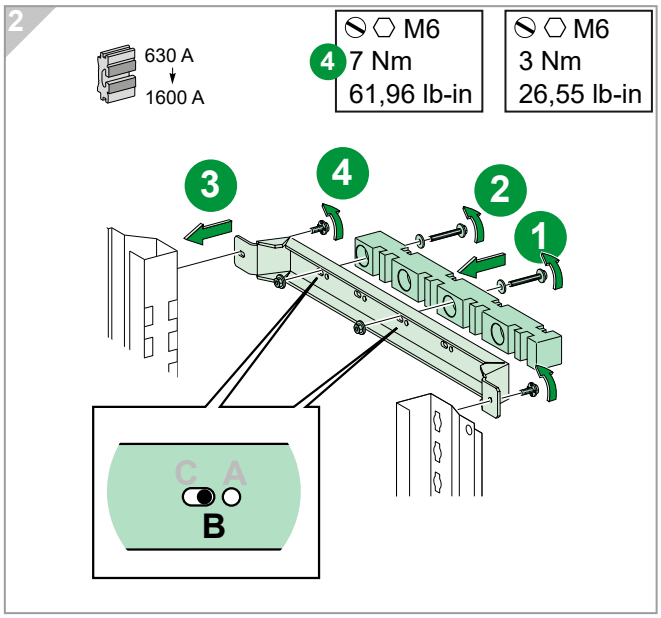
2
630 A
1600 A
4
M6
7 Nm
61,96 lb-in
M6
3 Nm
26,55 lb-in
3
4
2
1
C A
B

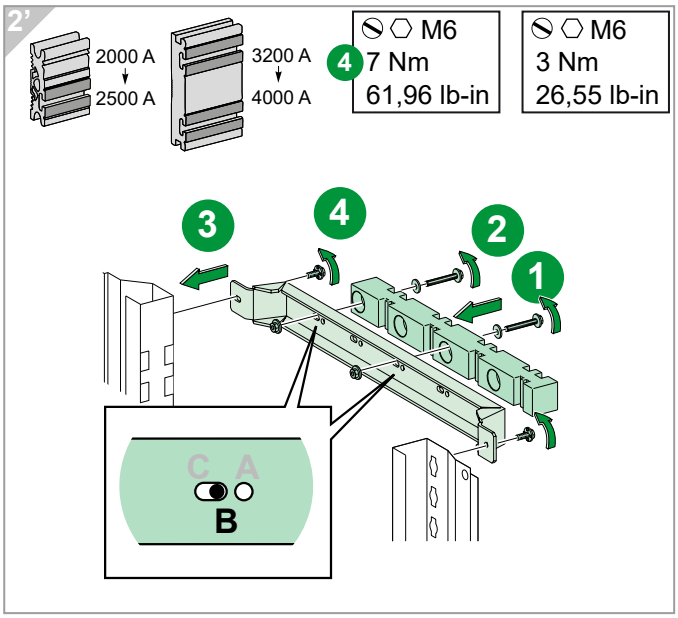
2'
2000 A
2500 A
3200 A
4000 A
4
M6
7 Nm
61,96 lb-in
M6
3 Nm
26,55 lb-in
3
4
2
1
C A
B

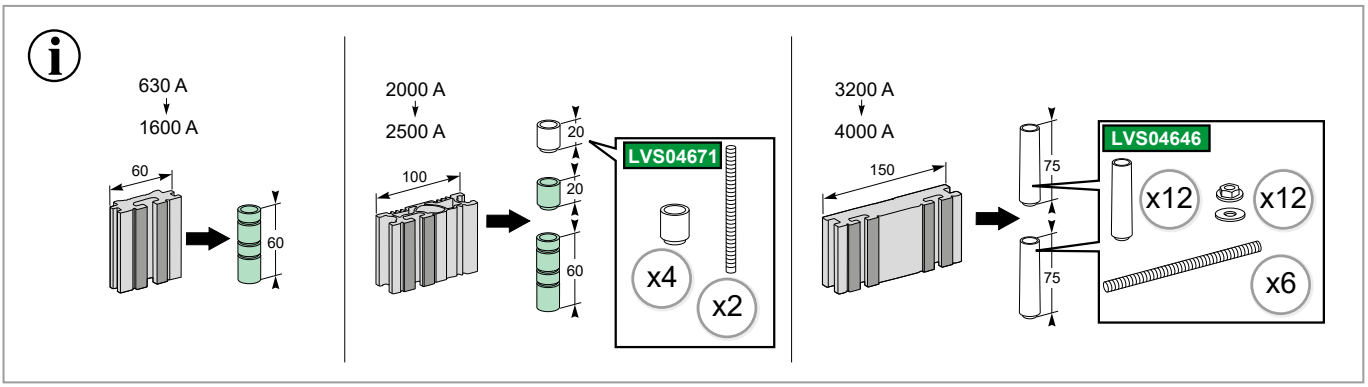

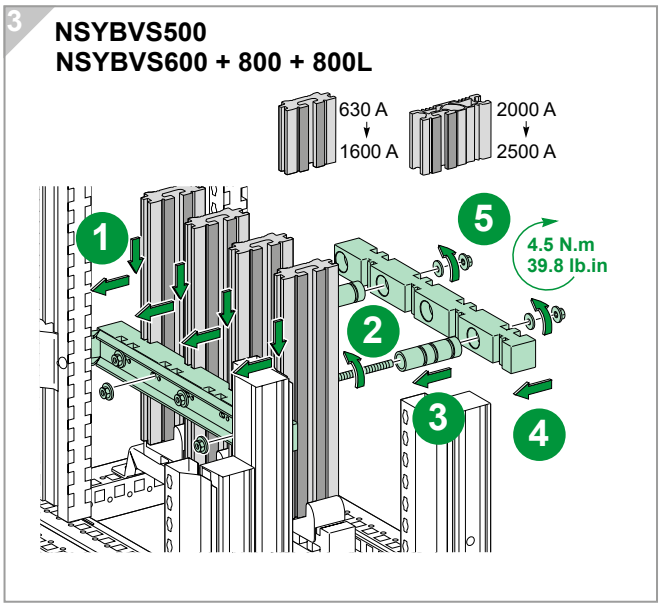

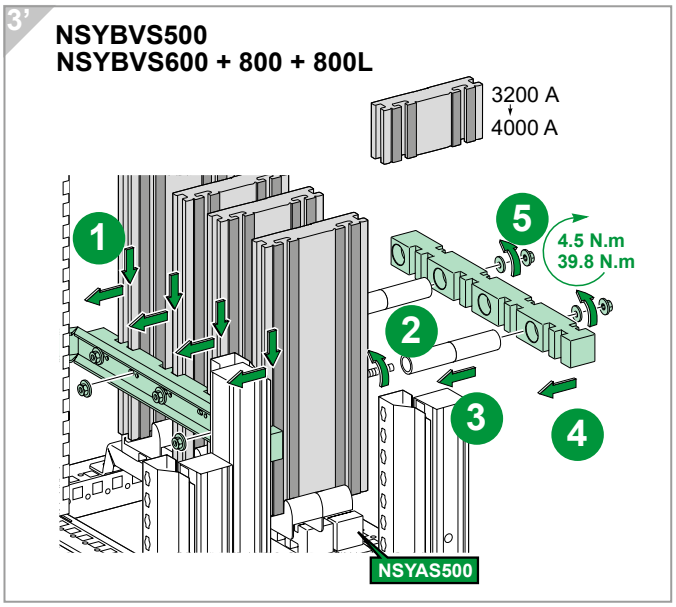

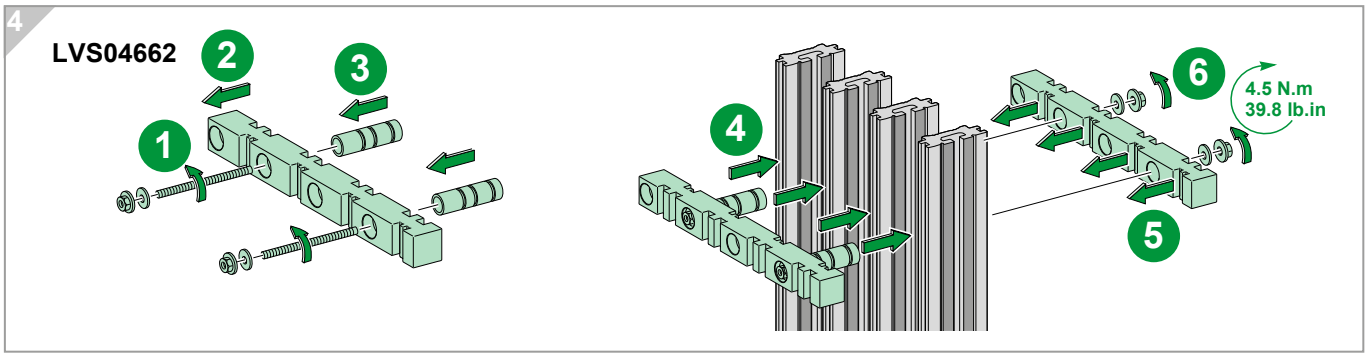

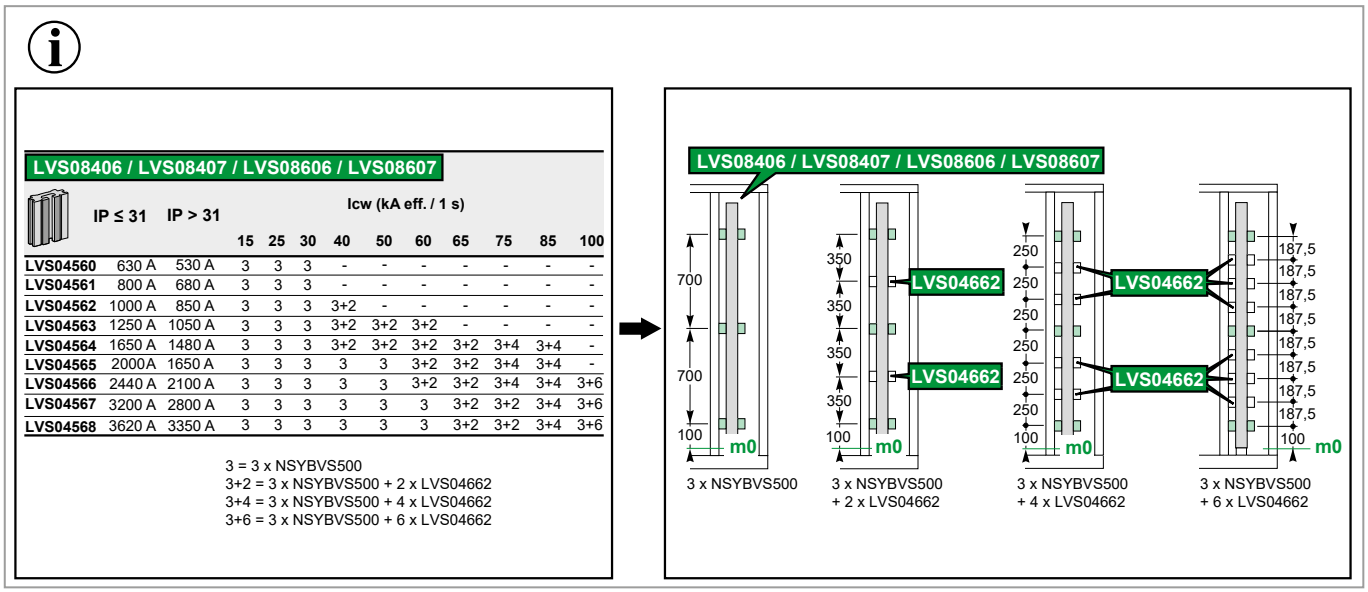

LVS08406 / LVS08407 / LVS08606 / LVS08607

	IP ≤ 31	IP > 31	Icw (kA eff. / 1 s) 15	25	30	40	50	60	65	75	85	100
LVS04560	630 A	530 A	3	3	3	-	-	-	-	-	-	-
LVS04561	800 A	680 A	3	3	3	-	-	-	-	-	-	-
LVS04562	1000 A	850 A	3	3	3	3+2	-	-	-	-	-	-
LVS04563	1250 A	1050 A	3	3	3	3+2	3+2	3+2	-	-	-	-
LVS04564	1650 A	1480 A	3	3	3	3+2	3+2	3+2	3+2	3+4	3+4	-
LVS04565	2000A	1650 A	3	3	3	3	3	3+2	3+2	3+4	3+4	-
LVS04566	2440 A	2100 A	3	3	3	3	3	3+2	3+2	3+4	3+4	3+6
LVS04567	3200 A	2800 A	3	3	3	3	3	3	3+2	3+2	3+4	3+6
LVS04568	3620 A	3350 A	3	3	3	3	3	3	3+2	3+2	3+4	3+6

3 = 3 x NSYBVS500
3+2 = 3 x NSYBVS500 + 2 x LVS04662
3+4 = 3 x NSYBVS500 + 4 x LVS04662
3+6 = 3 x NSYBVS500 + 6 x LVS04662

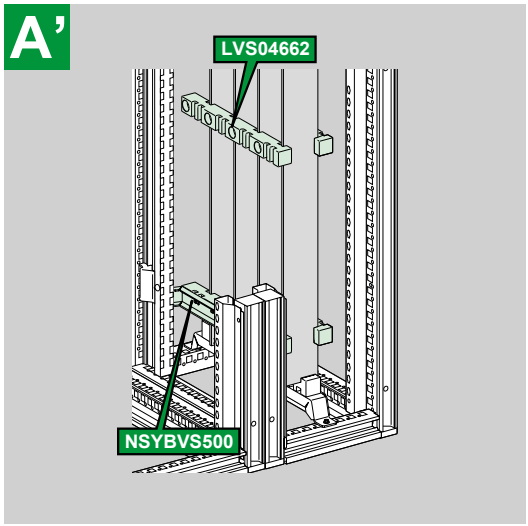
A'
LVS04662
NSYBVS500

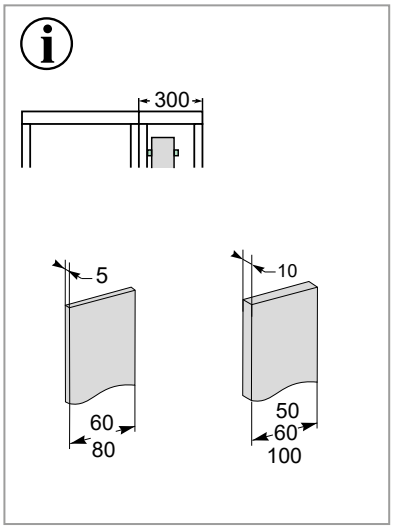
300
5
10
60
80
50
60
100

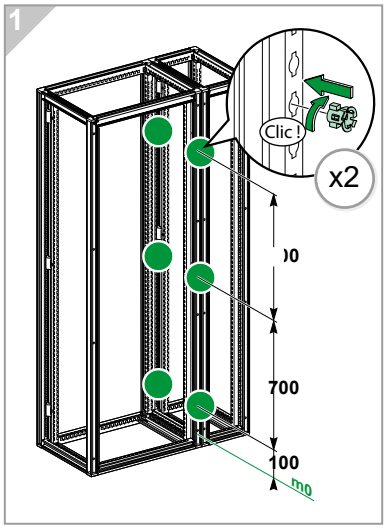
1
Clic !
x2
700
100

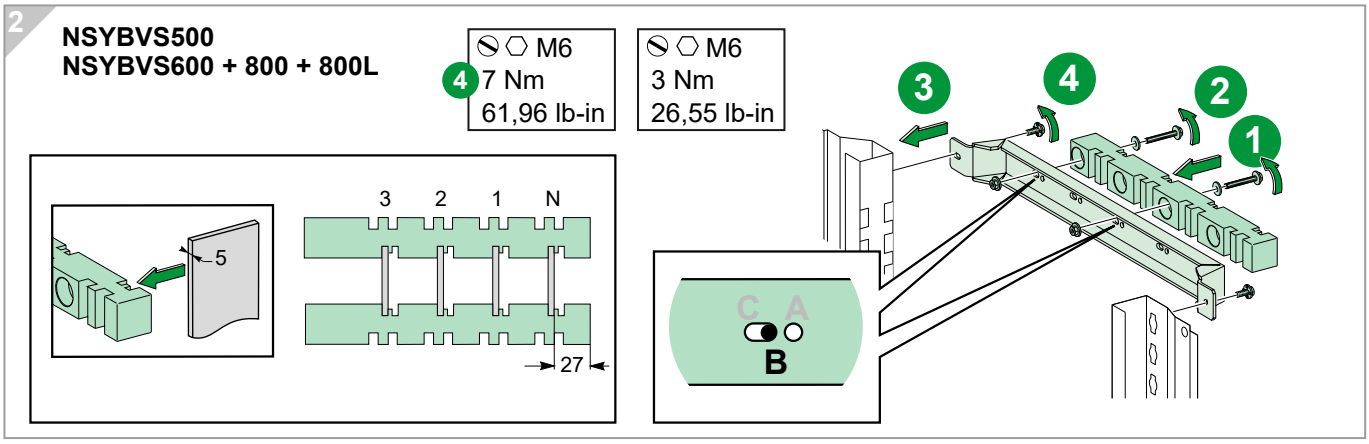
2
NSYBVS500
NSYBVS600 + 800 + 800L
4
M6
7 Nm
61,96 lb-in
M6
3 Nm
26,55 lb-in
5
3 2 1 N
27
C A
B
3
4
2
1

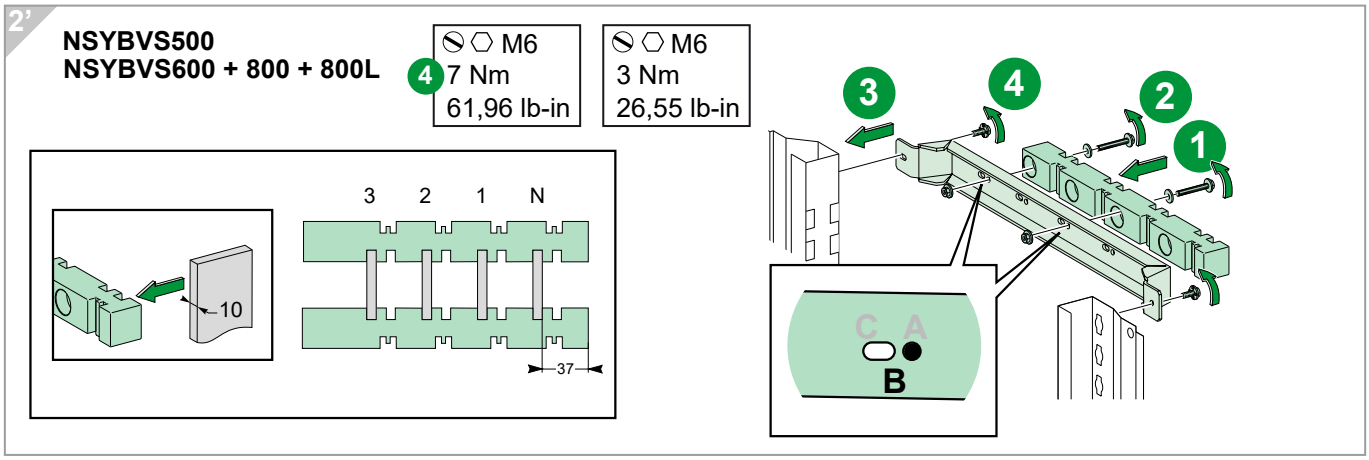
2'
NSYBVS500
NSYBVS600 + 800 + 800L
4
M6
7 Nm
61,96 lb-in
M6
3 Nm
26,55 lb-in
10
3 2 1 N
37
C A
B
3
4
2
1

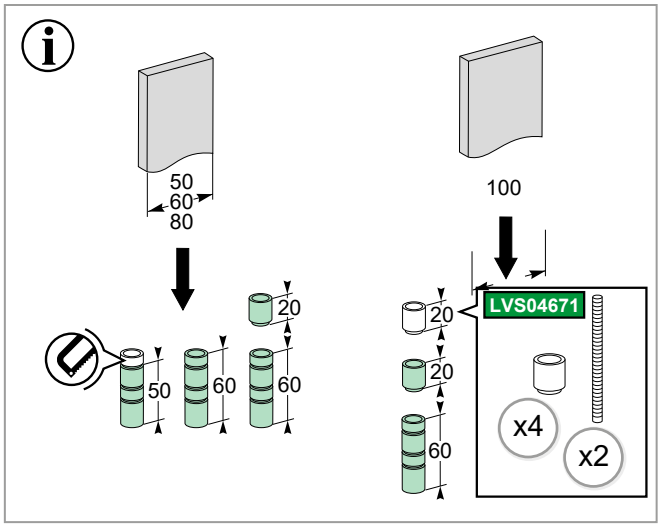
50
60
80
20
50
60
60
100
20
20
60
LVS04671
x4
x2

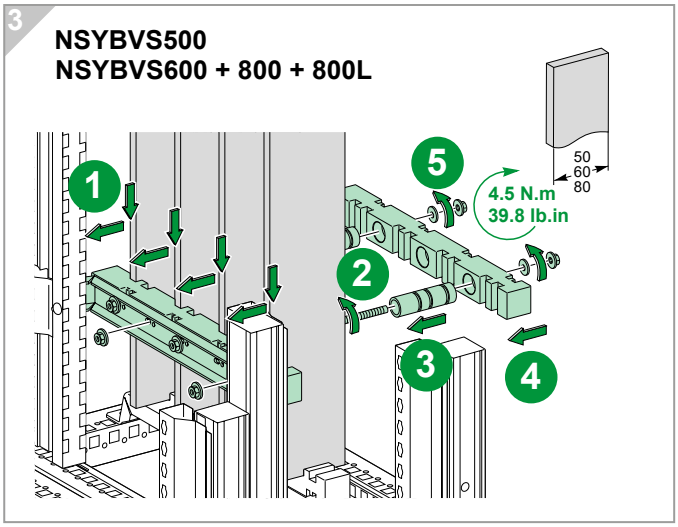
3
NSYBVS500
NSYBVS600 + 800 + 800L
50
60
80
4.5 N.m
39.8 lb.in
1
2
3
4
5

3'

NSYBVS500

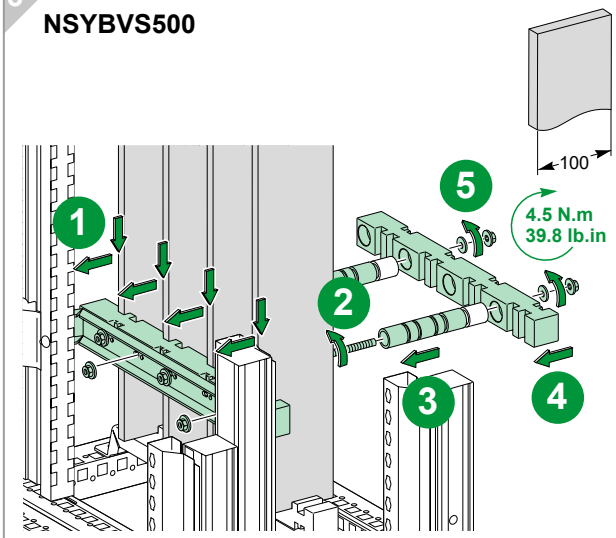

4

LVS04662

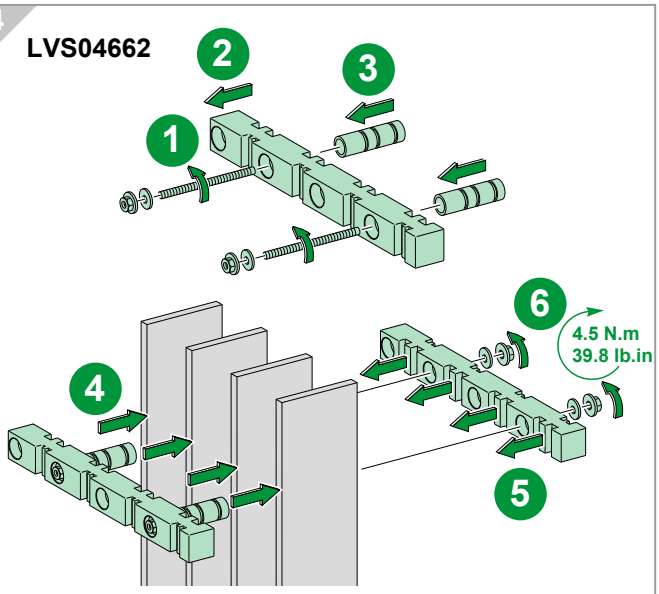

	IP ≤ 31	IP > 31	Icw (kA eff. / 1 s) 15	25	30	40	50
60 x 5	800 A	750 A	3	3 + 2	3 + 2	3 + 4	-
80 x 5	1000 A	900 A	3	3 + 2	3 + 2	3 + 4	3 + 4
60 x 5	1400 A	1250 A	3	3 + 2	3 + 2	3 + 2	3 + 4
80 x 5	1800 A	1600 A	3	3	3 + 2	3 + 2	3 + 4

3 = 3 x NSYBVS500
3+2 = 3 x NSYBVS500 + 2 x LVS04662
3+4 = 3 x NSYBVS500 + 4 x LVS04662
NSYBVS800L + LVS04678

	IP ≤ 31	IP > 31	Icw (kA eff. / 1 s) 25	30	40	50	60	65	75	85
50 x 10	1200 A	1080 A	3	3 + 2	3 + 2	3 + 2	3 + 4	3 + 4	-	-
60 x 10	1400 A	1250 A	3	3 + 2	3 + 2	3 + 2	3 + 4	3 + 4	3 + 6	-
80 x 10	1800 A	1600 A	3	3 + 2	3 + 2	3 + 2	3 + 4	3 + 4	3 + 6	-
100 x10	2150 A	1900 A	3	3	3 + 2	3 + 2	3 + 2	3 + 2	3 + 4	3 + 4
50 x 10	2050 A	1850 A	3	3 + 2	3 + 2	3 + 2	3 + 4	3 + 4	3 + 4	-
60 x 10	2300 A	2000 A	3	3 + 2	3 + 2	3 + 2	3 + 4	3 + 4	3 + 4	3 + 4
80 x 10	2820 A	2500 A	3	3	3 + 2	3 + 2	3 + 2	3 + 2	3 + 4	3 + 4
100 x10	3300 A	2900 A	3	3	3 + 2	3 + 2	3 + 2	3 + 2	3 + 4	3 + 4

3 = 3 x NSYBVS500
3+2 = 3 x NSYBVS500 + 2 x LVS04662
3+4 = 3 x NSYBVS500 + 4 x LVS04662
3+6 = 3 x NSYBVS500 + 6 x LVS04662

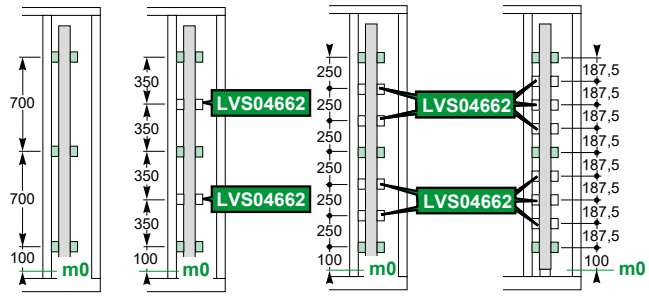

3 x NSYBVS500 | 3 x NSYBVS500 + 2 x LVS04662 | 3 x NSYBVS500 + 4 x LVS04662 | 3 x NSYBVS500 + 6 x LVS04662

	IP ≤ 31	IP > 31	Icw (kA eff. / 1 s) 25 → 50	60 → 85
80 x 10	3200 A	2820 A	2 x 3	2 x (3 + 2)

2x3 = 3 x NSYBVS500 + 3 x LVS04661
2x(3+2) = 3 x NSYBVS500 + 2 x LVS04662
+ 3 x NSYBVS500 + 2 x LVS04662

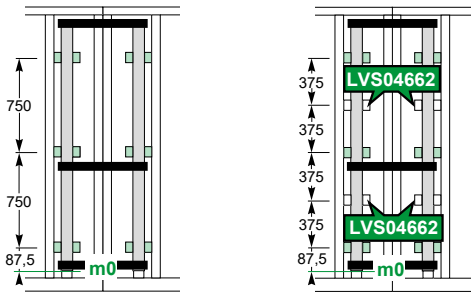

3 x NSYBVS500 + 3 x NSYBVS500 | 3 x NSYBVS500 + 2 x LVS04662 + 3 x NSYBVS500 + 2 x LVS04662

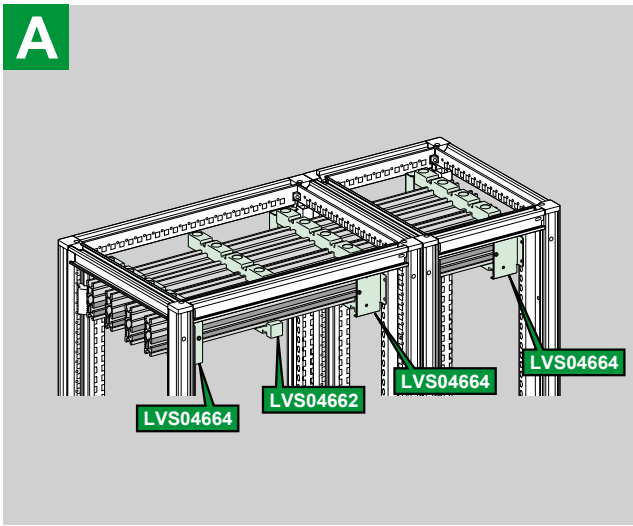
A
LVS04664
LVS04662
LVS04664
LVS04664

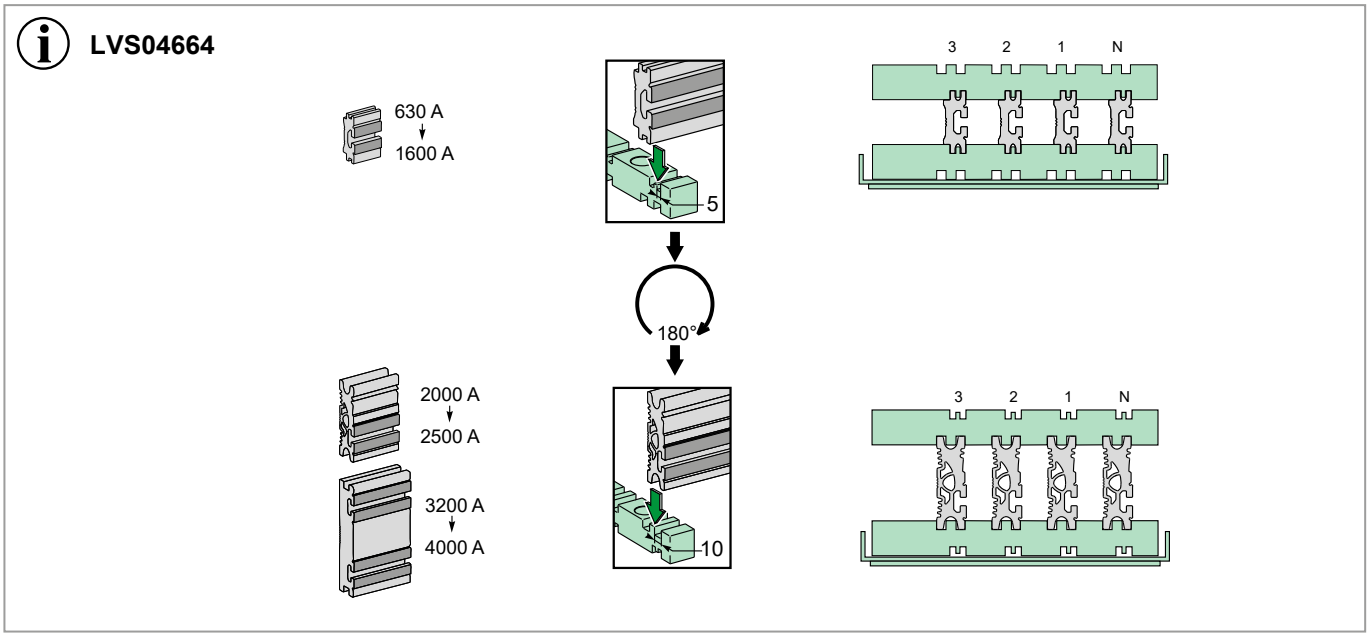
LVS04664
630 A
1600 A
5
180°
3 2 1 N
2000 A
2500 A
3200 A
4000 A
10
3 2 1 N

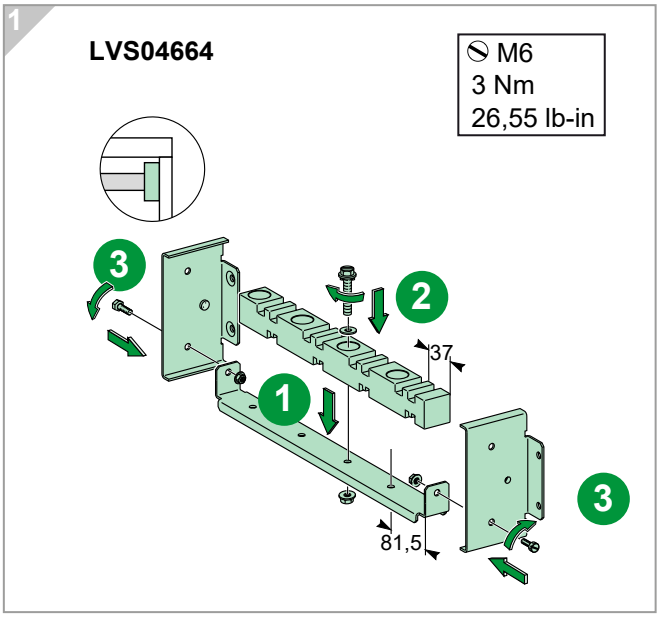
1
LVS04664
M6
3 Nm
26,55 lb-in
3
2
1
37
81,5
3

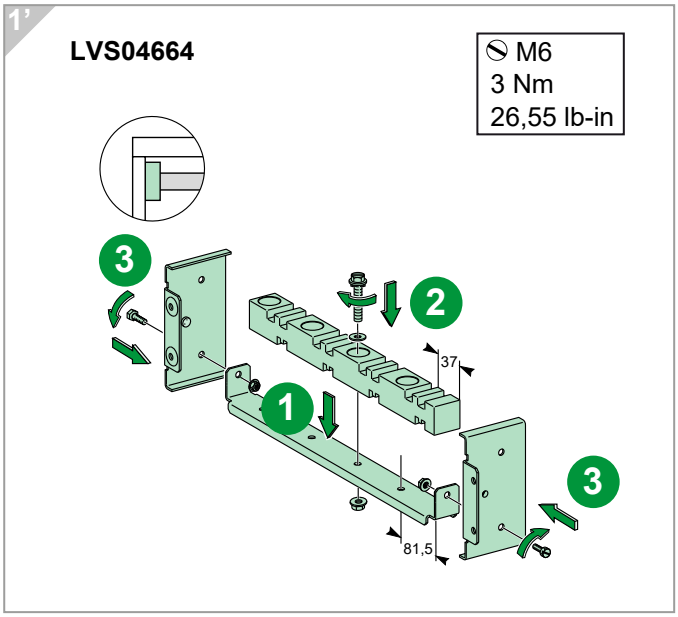
1'
LVS04664
M6
3 Nm
26,55 lb-in
3
2
1
37
81,5
3

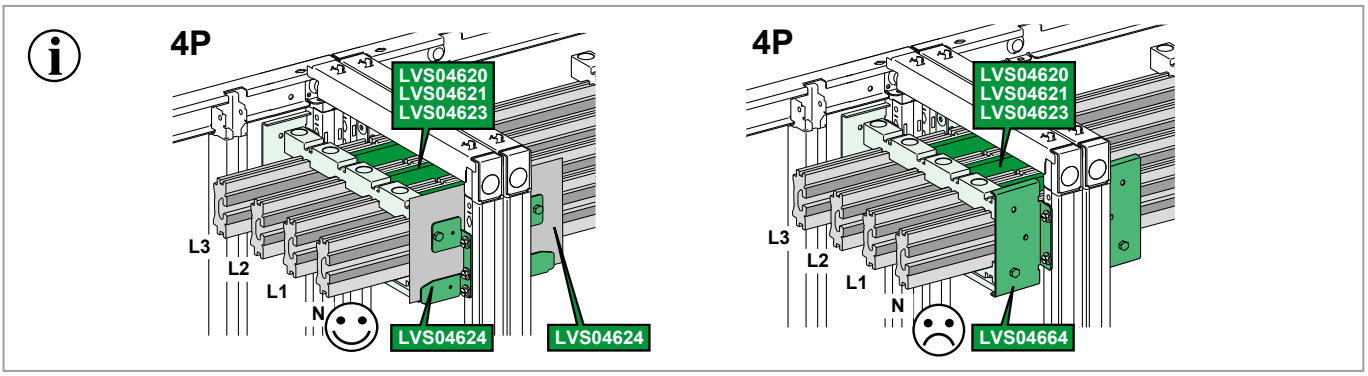
4P
LVS04620
LVS04621
LVS04623
L3
L2
L1
N
LVS04624
LVS04624
4P
LVS04620
LVS04621
LVS04623
L3
L2
L1
N
LVS04664

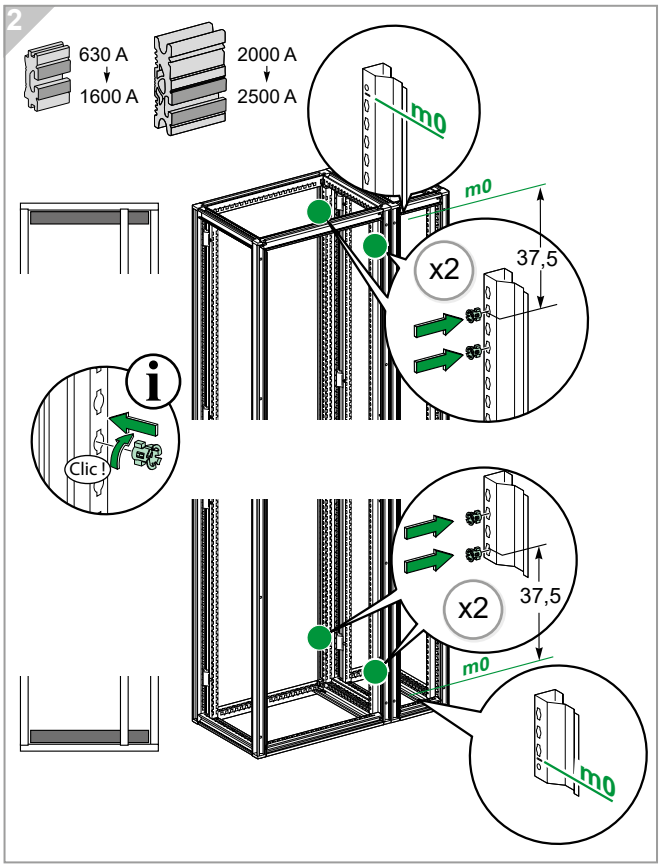
2
630 A
1600 A
2000 A
2500 A
m0
m0
x2
37,5
Clic !
x2
37,5
m0
m0

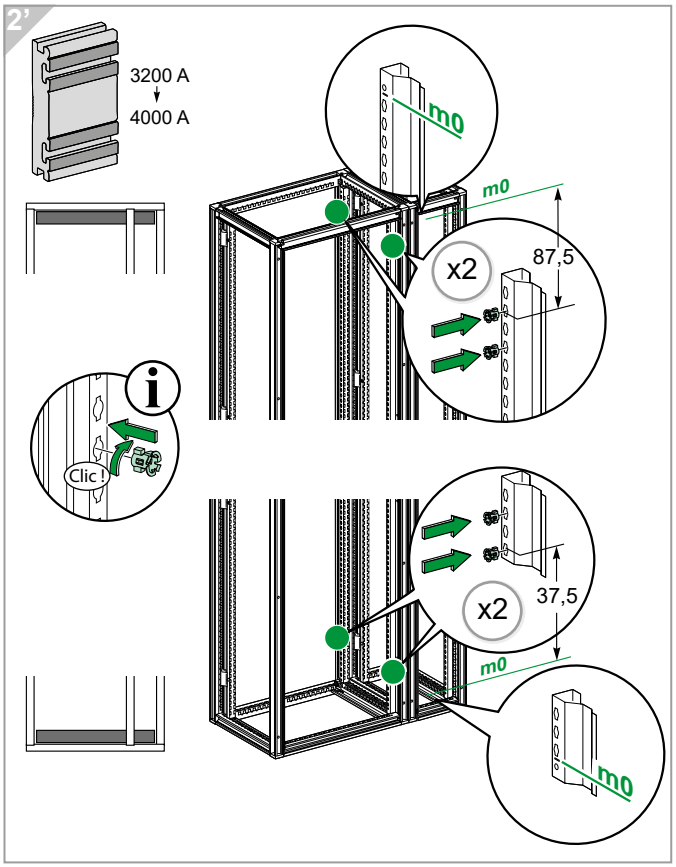
2'
3200 A
4000 A
m0
m0
x2
87,5
Clic !
x2
37,5
m0
m0

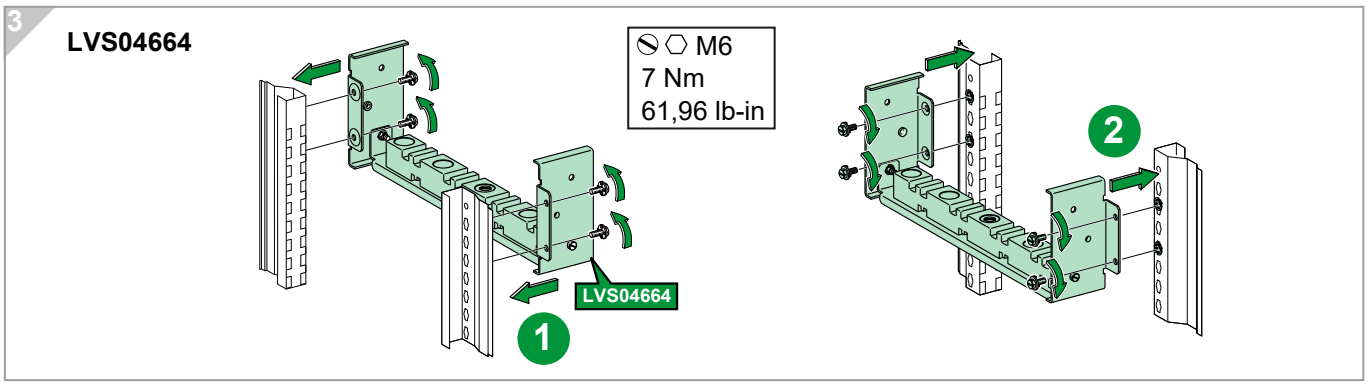
3
LVS04664
M6
7 Nm
61,96 lb-in
LVS04664
1
2

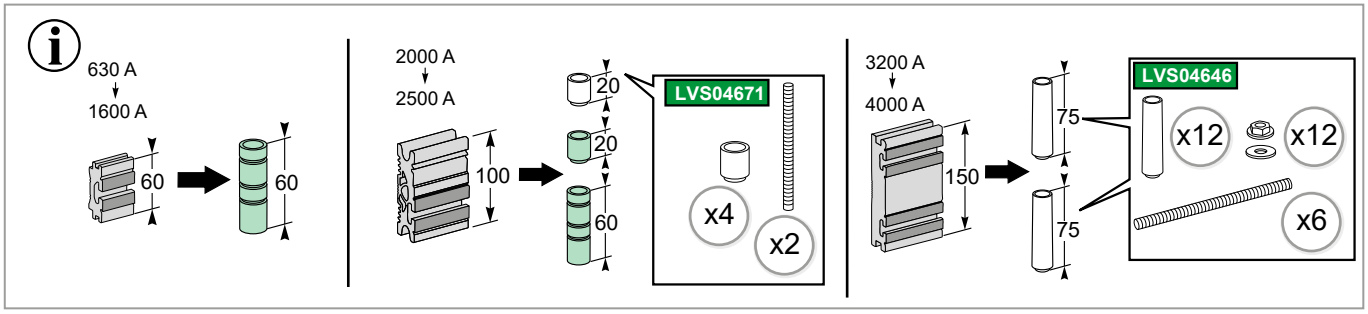
630 A
1600 A
60
60
2000 A
2500 A
100
20
20
60
LVS04671
x4
x2
3200 A
4000 A
150
75
75
LVS04646
x12
x12
x6

4

LVS04664

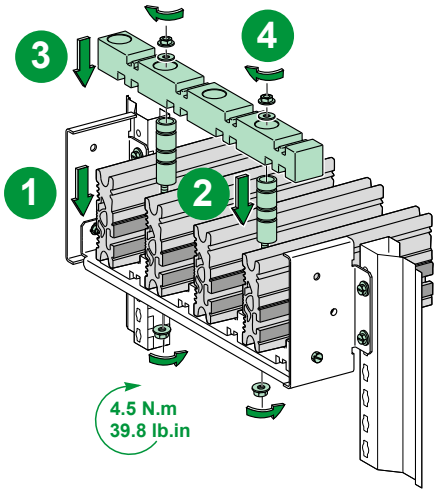

5

LVS04662

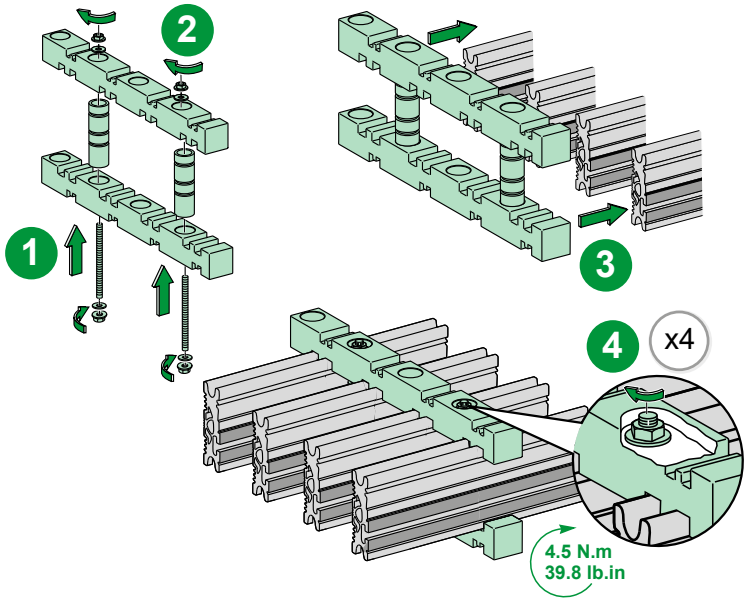

LVS08406 / LVS08407 / LVS08606 / LVS08607

	IP ≤ 31	IP > 31	Icw (kA eff. / 1 s) 15	25	30	40	50	60	65	75	85
LVS04560	630 A	530 A	2	2	2	-	-	-	-	-	-
LVS04561	800 A	680 A	2	2	2	-	-	-	-	-	-
LVS04562	1000 A	850 A	2	2	2	2	-	-	-	-	-
LVS04563	1250 A	1050 A	2	2	2	2	2	2+1	-	-	-
LVS04564	1650 A	1480 A	2	2	2	2	2	2+1	2+1	2+1	2+1

2 = 2 x LVS04664
2+1 = 2 x LVS04664 + 1 x LVS04662

LVS08406 / LVS08407 / LVS08606 / LVS08607

	IP ≤ 31	IP > 31	Icw (kA eff. / 1 s) 15	25	30	40	50	60	65	75	85	100
LVS04565	2000 A	1650 A	2	2	2	2	2	2	2+1	2+1	2+1	2+2
LVS04566	2440 A	2100 A	2	2	2	2	2	2	2+1	2+1	2+1	2+2
LVS04567	3200 A	2800 A	2	2	2	2	2	2	2+1	2+1	2+1	2+2
LVS04568	3620 A	3350 A	2	2	2	2	2	2	2+1	2+1	2+1	2+2

2 = 2 x LVS04664
2+1 = 2 x LVS04664 + 1 x LVS04662
2+2 = 2 x LVS04664 + 2 x LVS04662

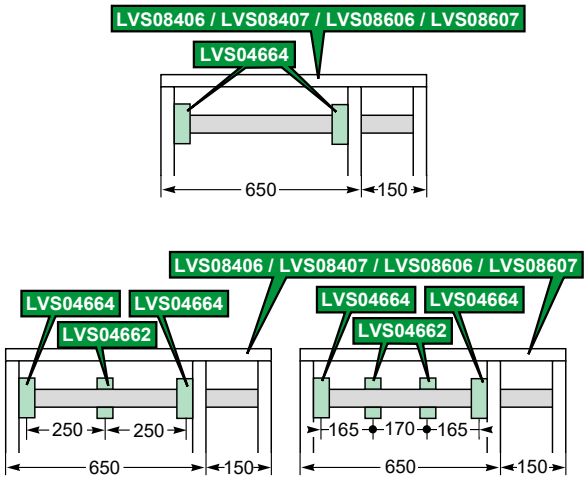

LVS04560 / LVS04561 / LVS04562 / LVS04563 / LVS04564

	Icw (kA eff. / 1 s) 15	25	30	40	50	60	65	75	85
LVS08403 / LVS08603	1	1	1	1	1	1	1+1	1+1	1+1
LVS08404 / LVS08604	1	1	1	1	1	1+1	1+1	1+1	1+1

1 = 1 x LVS04664
1+1 = 1 x LVS04664 + 1 x LVS04662

LVS04565 / LVS04566 / LVS04567 / LVS04568

	Icw (kA eff. / 1 s) 15	25	30	40	50	60	65	75	85	100
LVS08403 / LVS08603	1	1	1	1	1	1	1+1	1+1	1+1	1+1
LVS08404 / LVS08604	1	1	1	1	1	1+1	1+1	1+1	1+1	1+1

1 = 1 x LVS04664
1+1 = 1 x LVS04664 + 1 x LVS04662

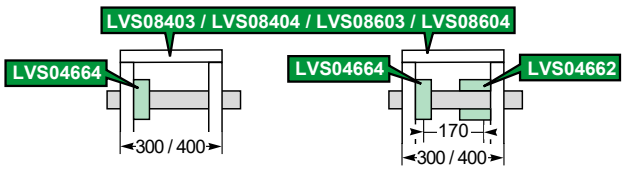

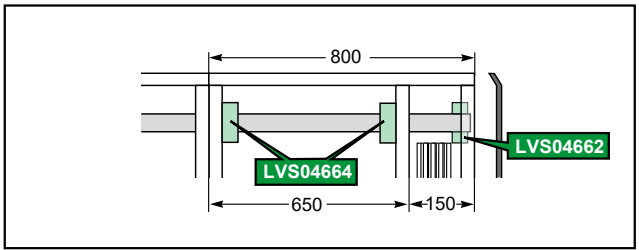

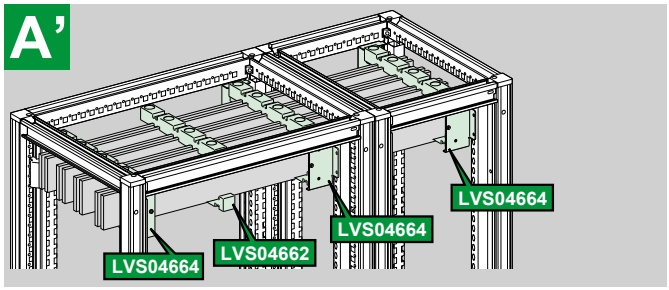
A'
LVS04664
LVS04662
LVS04664
LVS04664

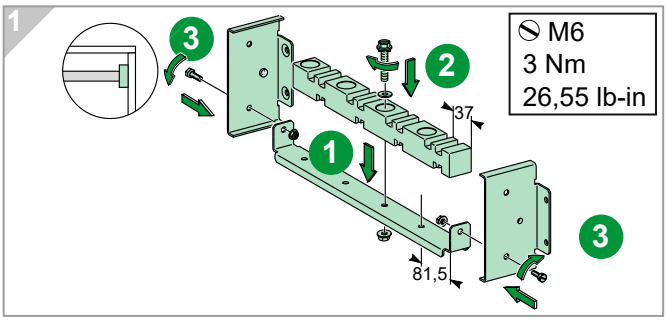
1
M6
3 Nm
26,55 lb-in
37
81,5

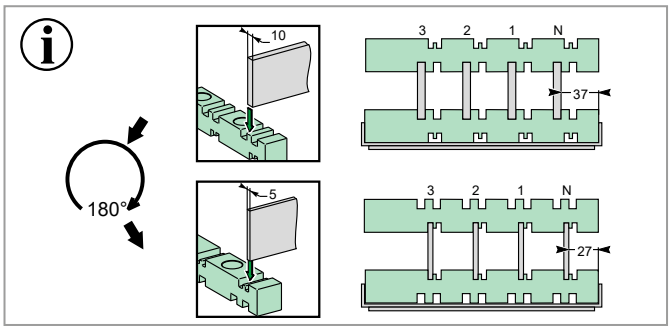
180°
10
5
3 2 1 N
37
27

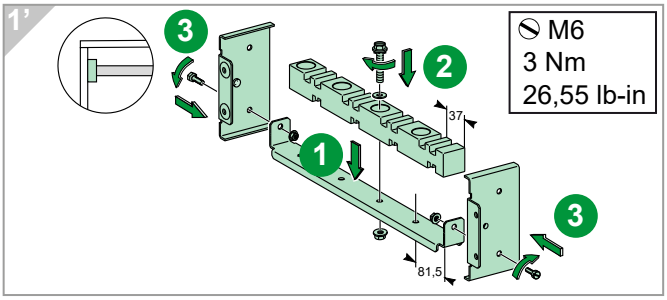
1'
M6
3 Nm
26,55 lb-in
37
81,5

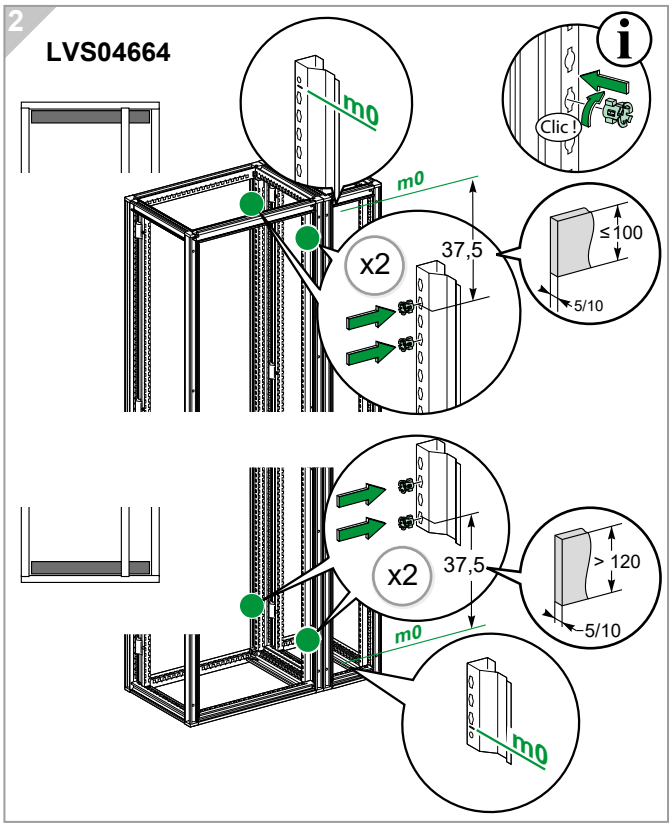
2
LVS04664
m0
Clic !
x2
37,5
≤ 100
5/10
> 120

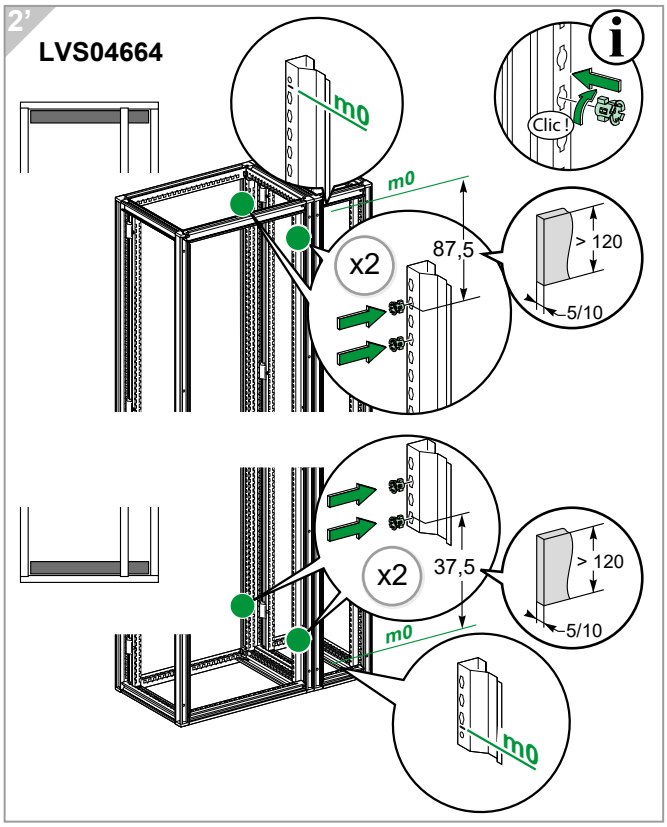
2'
LVS04664
m0
Clic !
x2
87,5
37,5
> 120
5/10

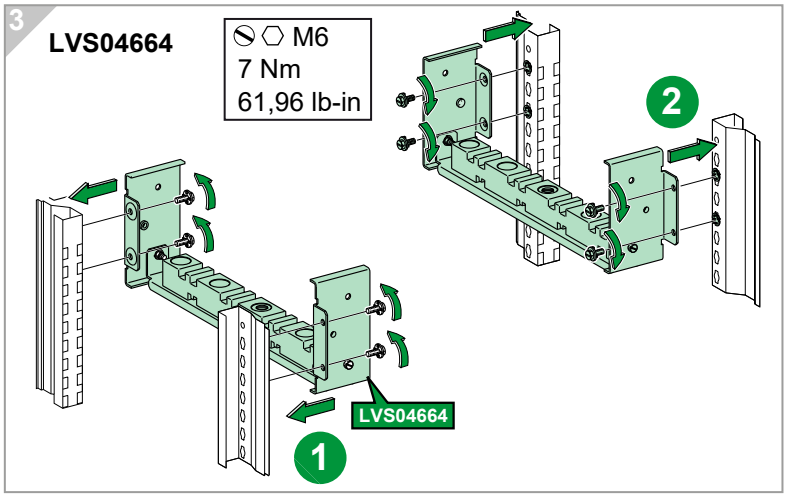
3
LVS04664
M6
7 Nm
61,96 lb-in
2
1
LVS04664

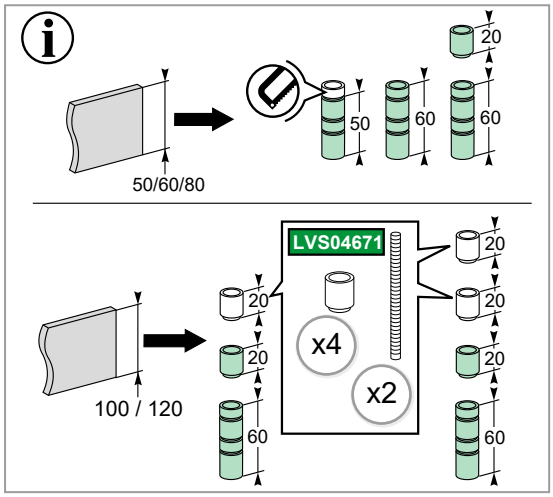
50/60/80
20
50
60
60
LVS04671
100 / 120
20
20
60
x4
x2
20
20
20
60

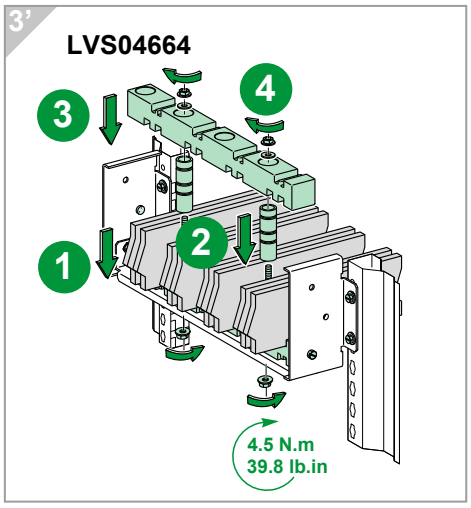

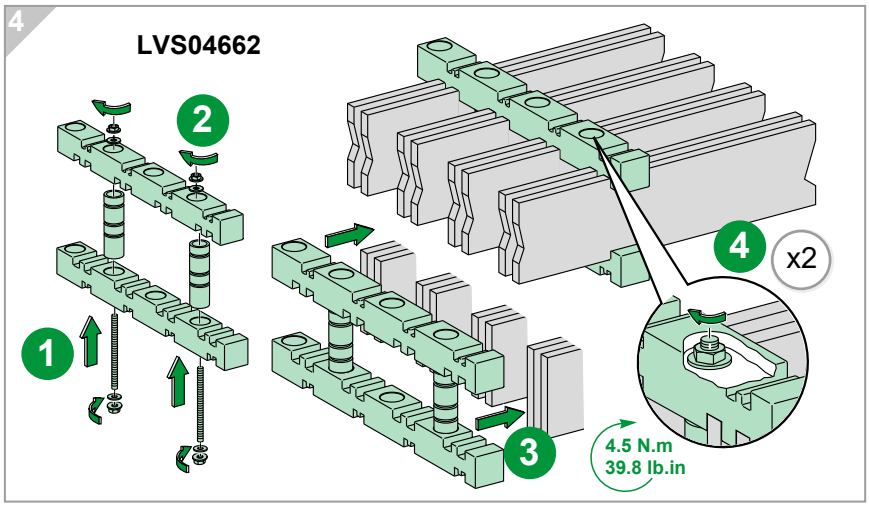

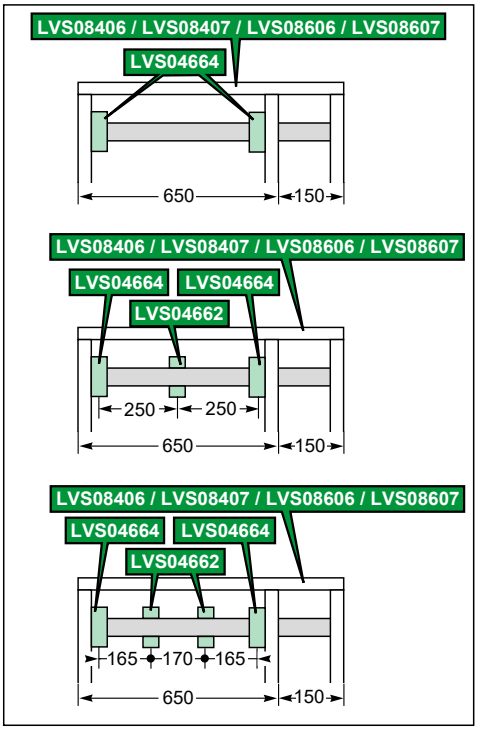

LVS08406 / LVS08407 / LVS08606 / LVS08607

	IP ≤ 31	IP > 31	Icw (kA eff. / 1 s) 15	25	30	40	50
60 x 5	800 A	750 A	2	2 + 1	2 + 1	2 + 1	-
80 x 5	1000 A	900 A	2	2	2 + 1	2 + 1	2 + 1
60 x 5	1400 A	1250 A	2	2	2	2 + 1	2 + 1
80 x 5	1800 A	1600 A	2	2	2	2 + 1	2 + 1

2 = 2 x LVS04664
2 + 1 = 2 x LVS04664 + 1 x LVS04662

LVS08406 / LVS08407 / LVS08606 / LVS08607

	IP ≤ 31	IP > 31	Icw (kA eff. / 1 s) 25	30	40	50	60	65	75	85
80 x 10	1800 A	1600 A	2	2	2	2 + 1	2 + 1	2 + 1	2 + 2	-

LVS08406 / LVS08407 / LVS08606 / LVS08607

	IP ≤ 31	IP > 31	Icw (kA eff. / 1 s) 25	30	40	50	60	65	75	85
50 x 10	2050 A	1850 A	2	2	2	2 + 1	2 + 1	2 + 1	2 + 1	-
60 x 10	2300 A	2000 A	2	2	2	2 + 1	2 + 1	2 + 1	2 + 1	2 + 1
80 x 10	2820 A	2500 A	2	2	2	2	2 + 1	2 + 1	2 + 1	2 + 1
100 x 10	3300 A	2900 A	2	2	2	2	2	2 + 1	2 + 1	2 + 1

2 = 2 x LVS04664
2 + 1 = 2 x LVS04664 + 1 x LVS04662
2 + 2 = 2 x LVS04664 + 2 x LVS04662

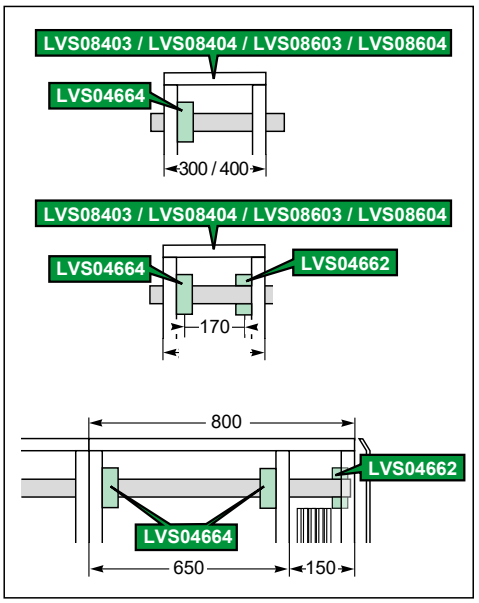

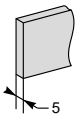

	Icw (kA eff. / 1 s) 15	25	30	40	50
LVS08403 / LVS08603	1		1	1 + 1	1 + 1
LVS08404 / LVS08604	1	1	1 + 1	1 + 1	1 + 1

1 = 1 x LVS04664
1 + 1 = 1 x LVS04664 + 1 x LVS04662

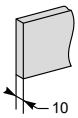

	Icw (kA eff. / 1 s) 25	30	40	50	60	65	75	85
LVS08403 / LVS08603	1	1	1	1	1 + 1	1 + 1	1 + 1	1 + 1
LVS08404 / LVS08604	1	1	1	1 + 1	1 + 1	1 + 1	1 + 1	1 + 1

1 = 1 x LVS04664
1 + 1 = 1 x LVS04664 + 1 x LVS04662

LVS06545

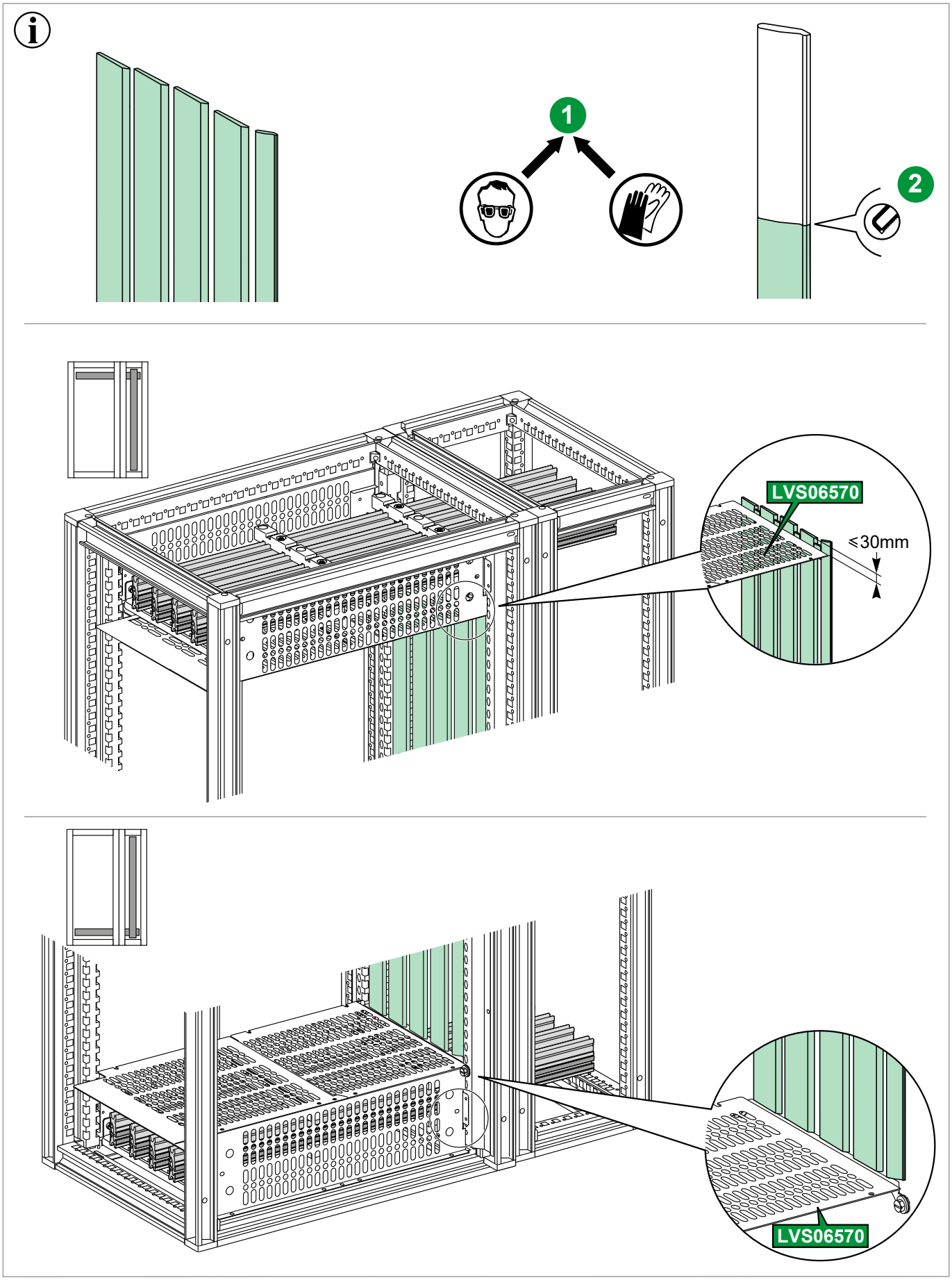

B LVS06545

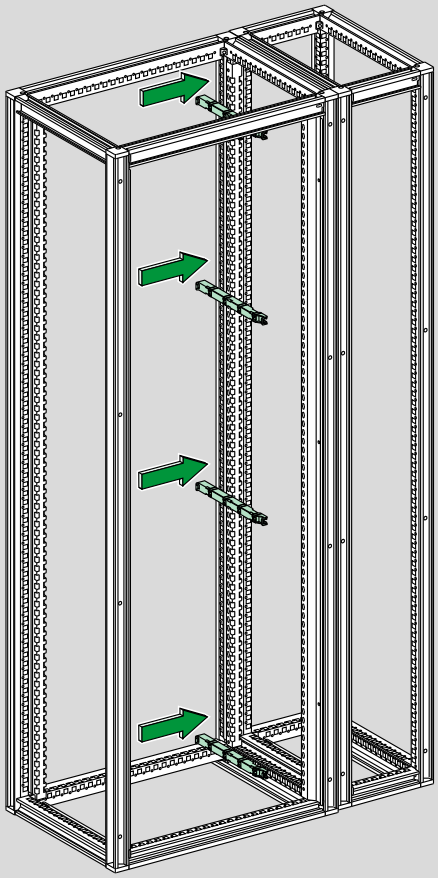

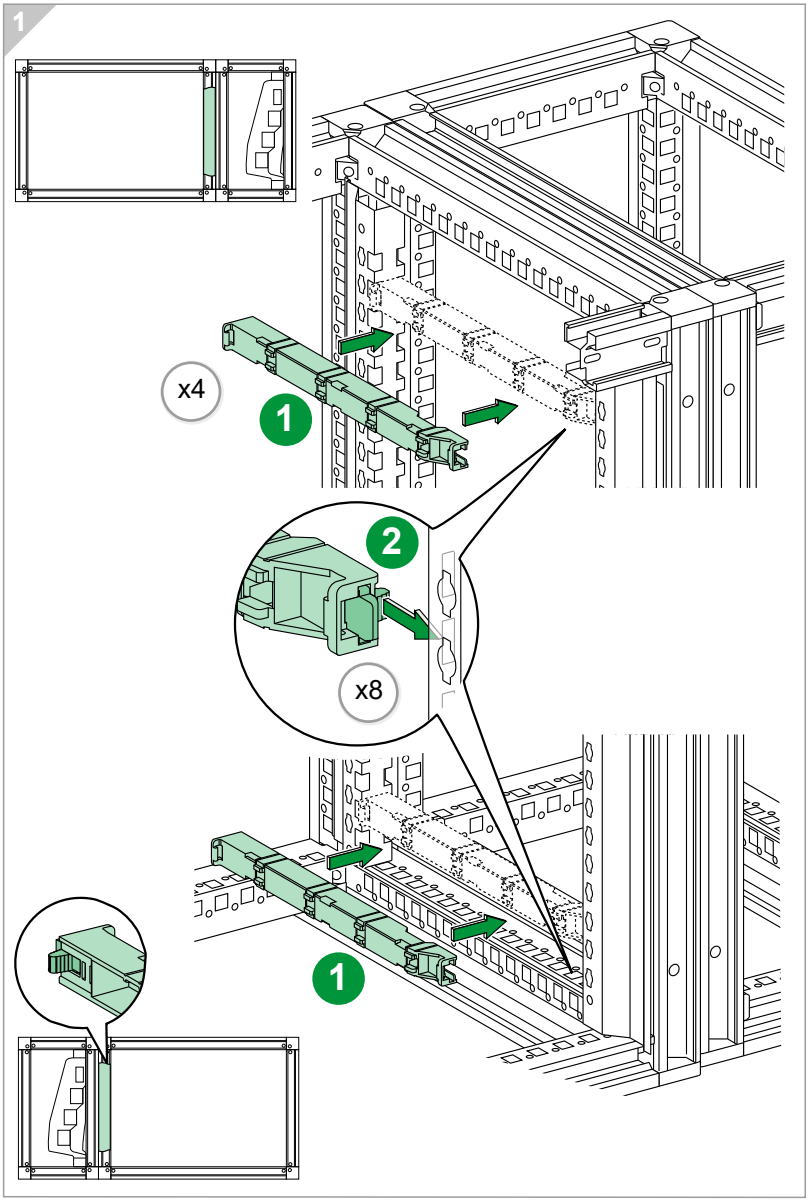

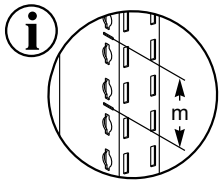

m = 50 mm

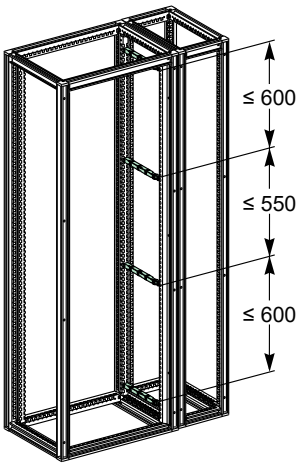

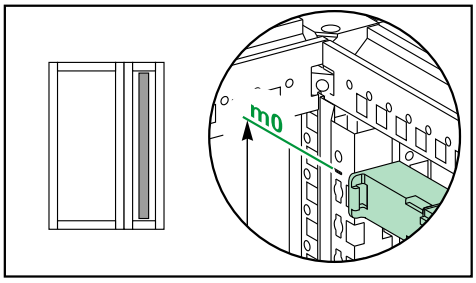

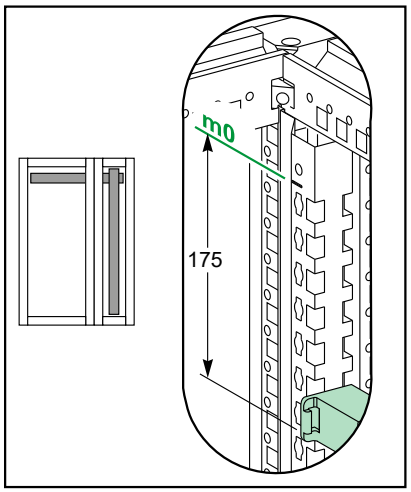

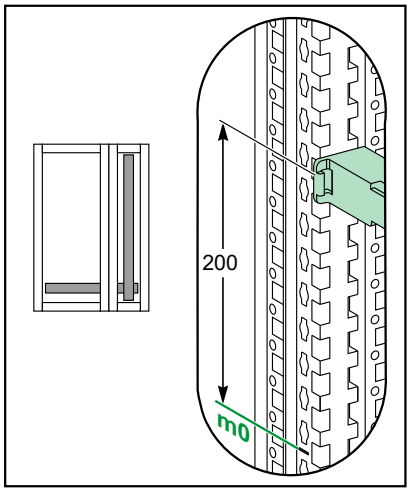

C LVS06545

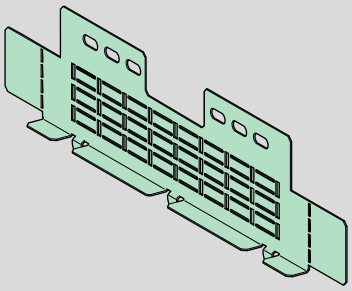

1

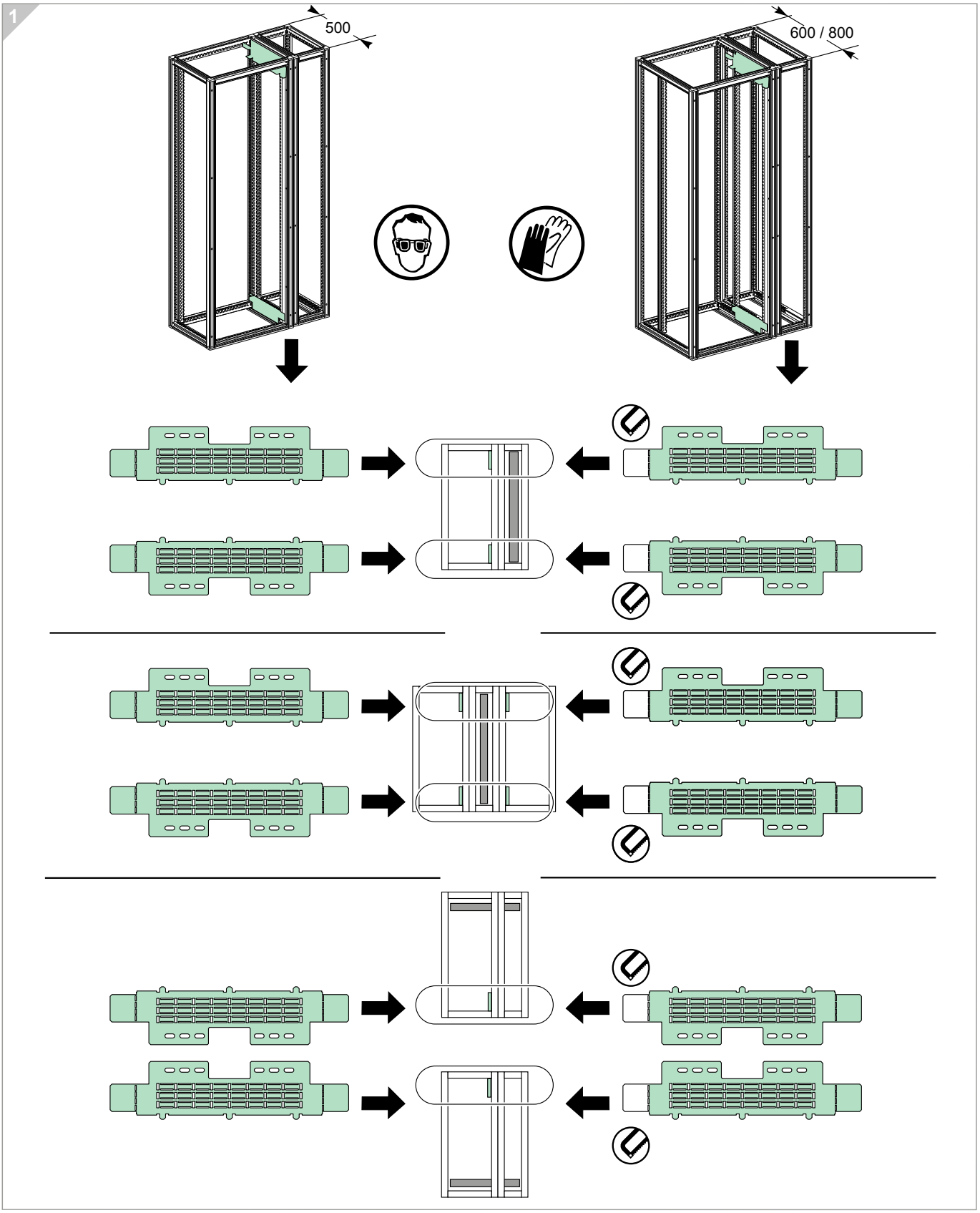

D **LVS06545**

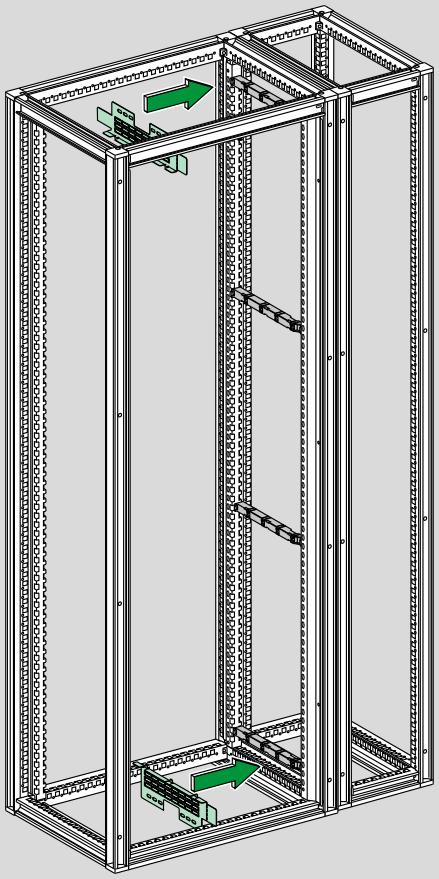

1

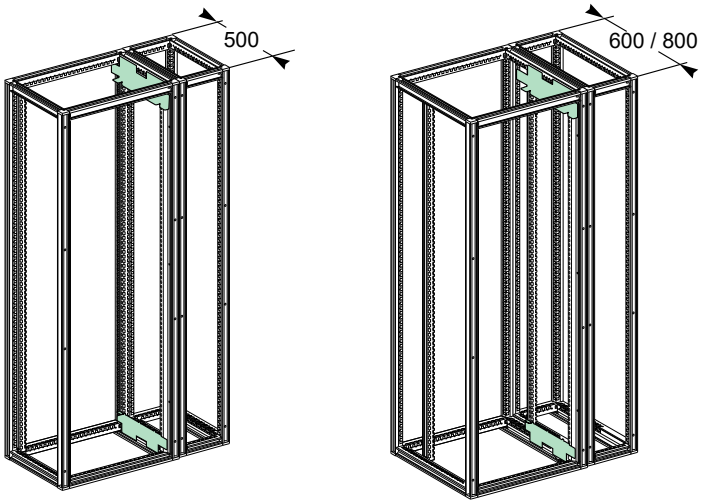

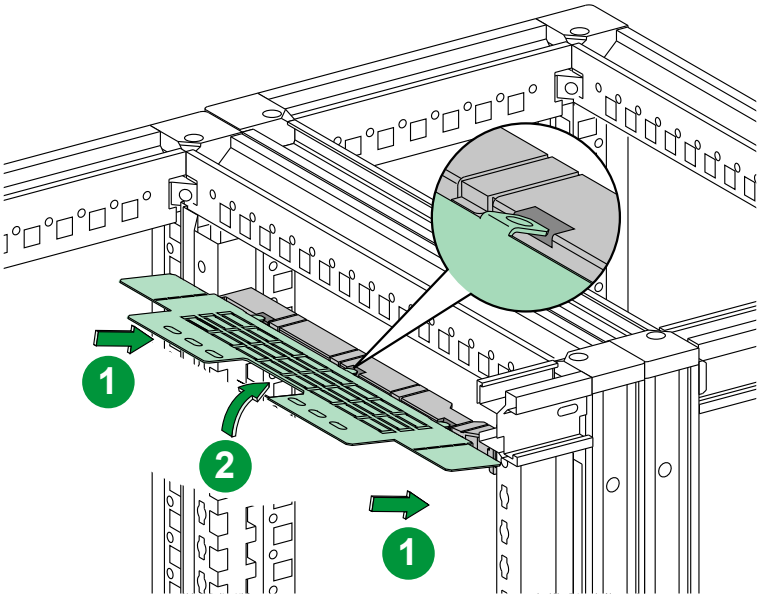

M6	8 Nm
⊕	70.81 lb-in

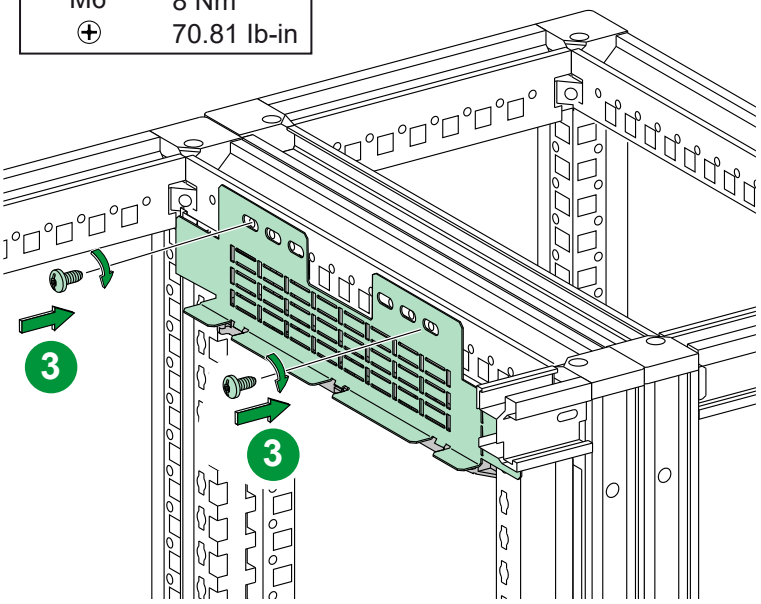

E **LVS06545**

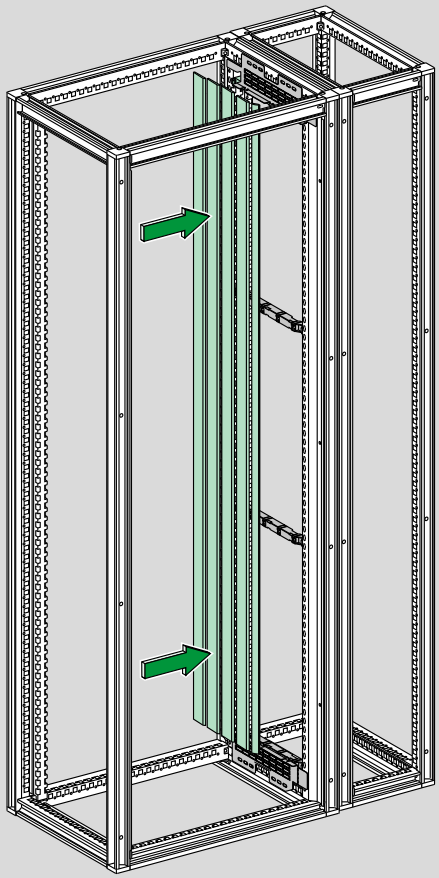

1

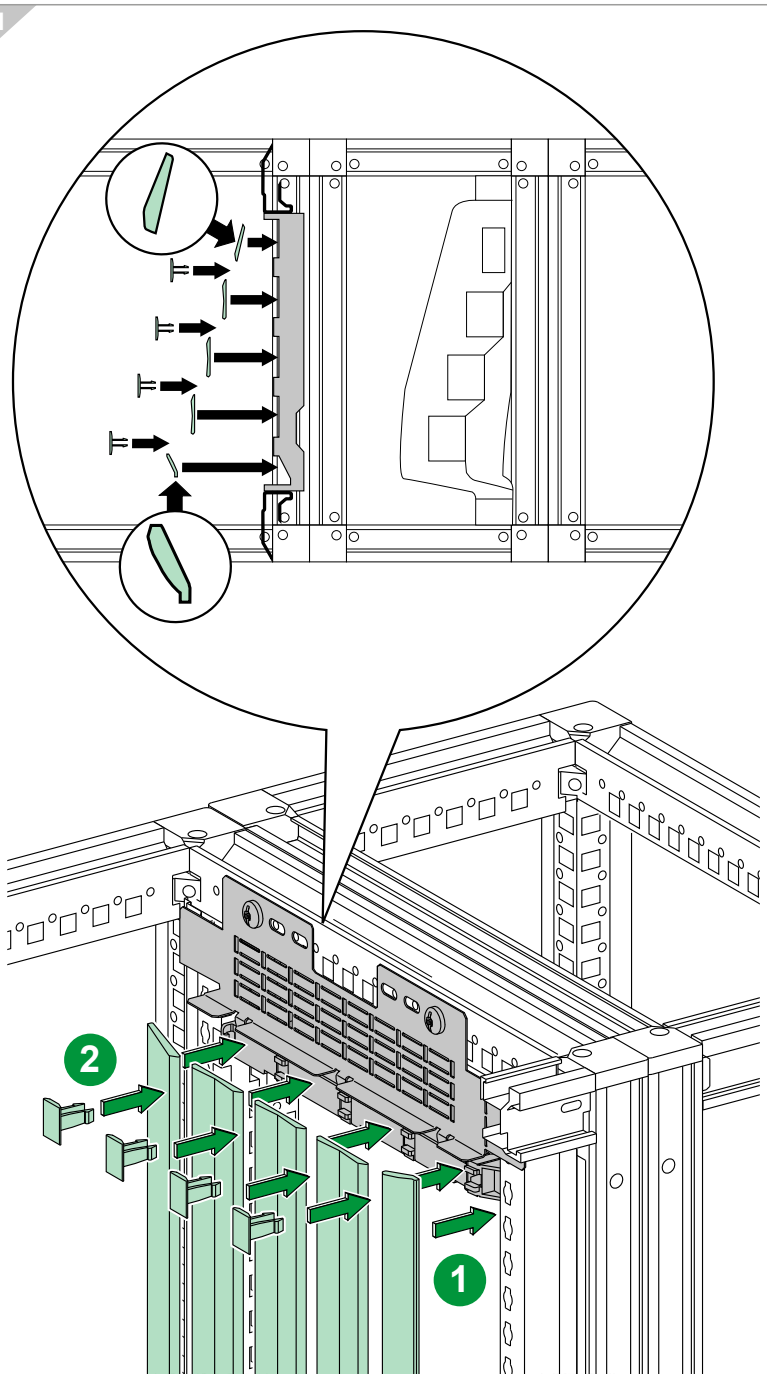

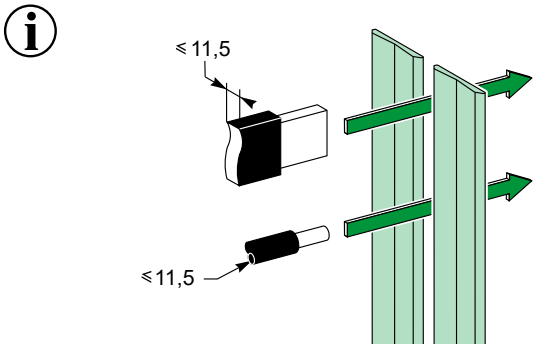

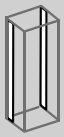

LVS06541
LVS06543

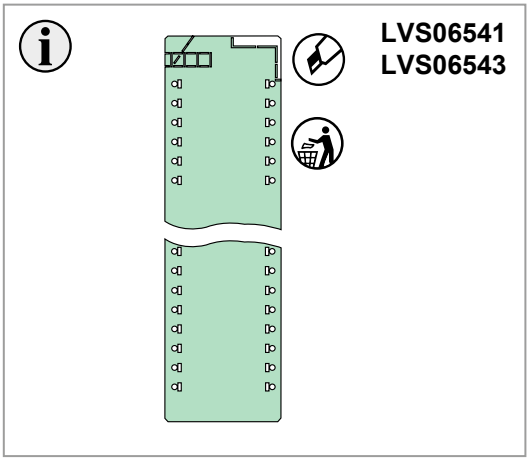

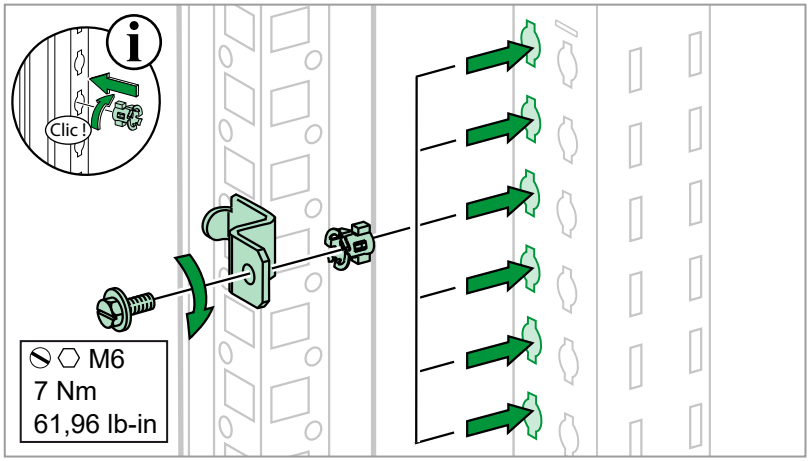

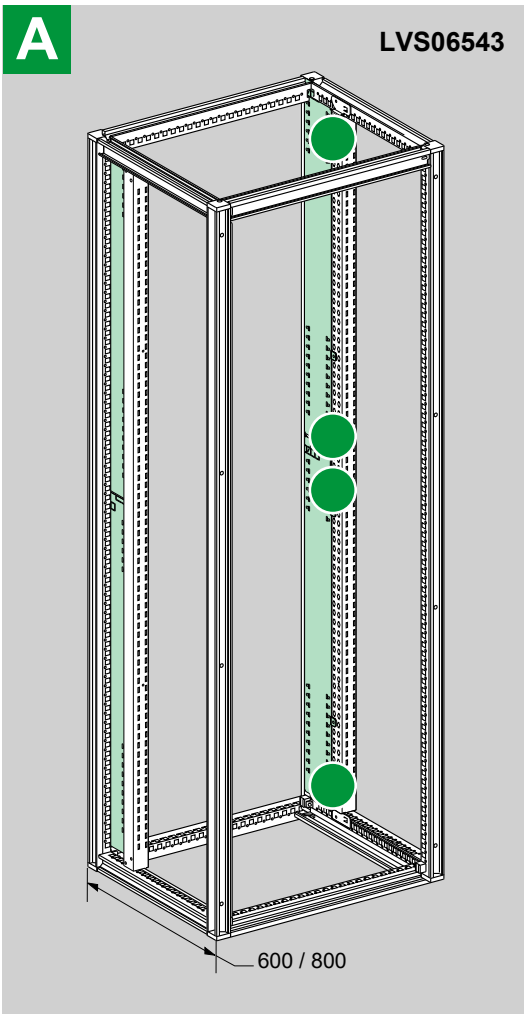

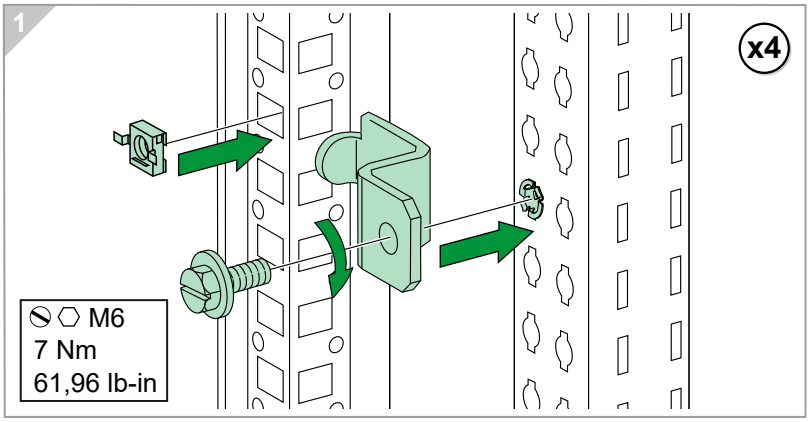

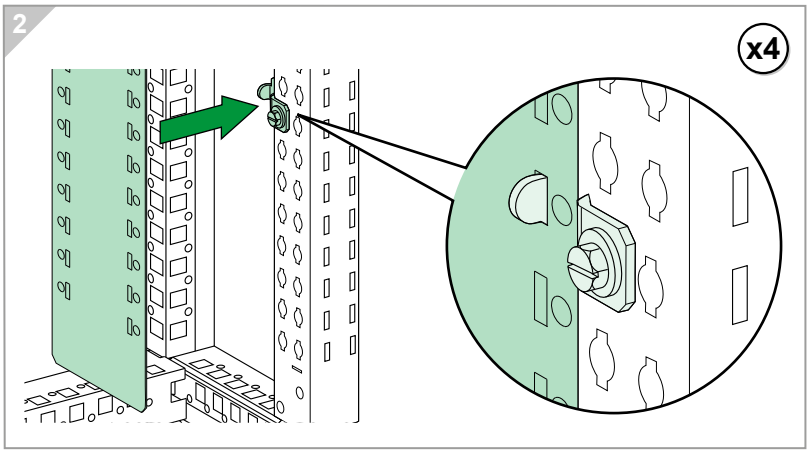

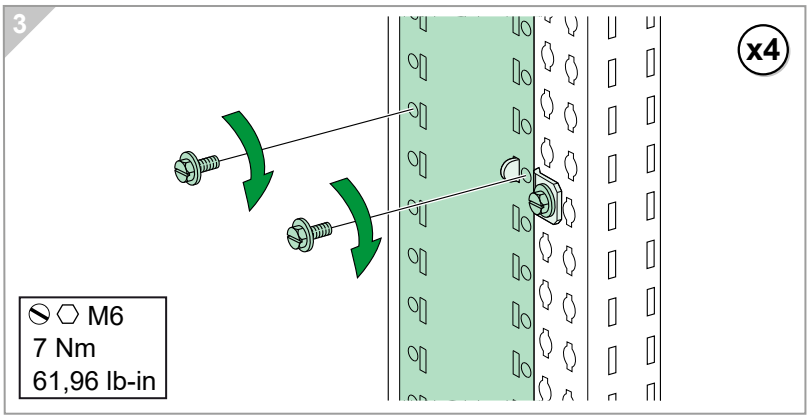

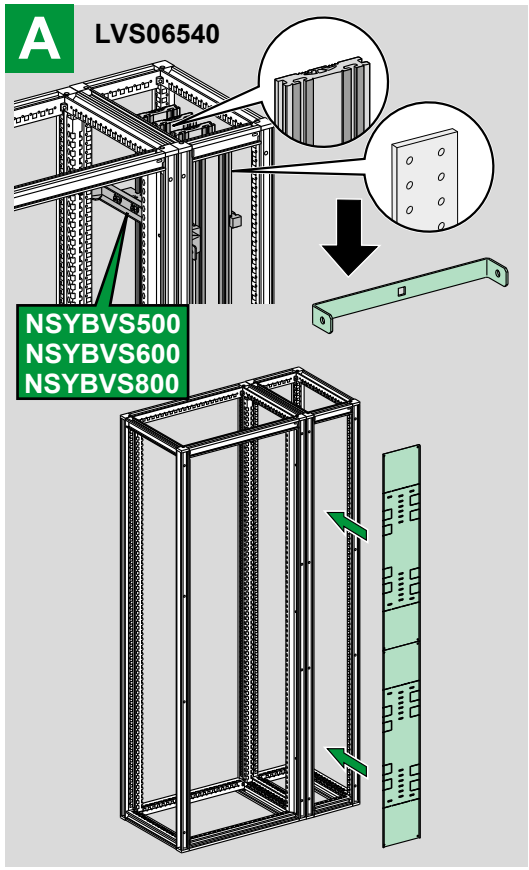
A
LVS06540
NSYBVS500
NSYBVS600
NSYBVS800

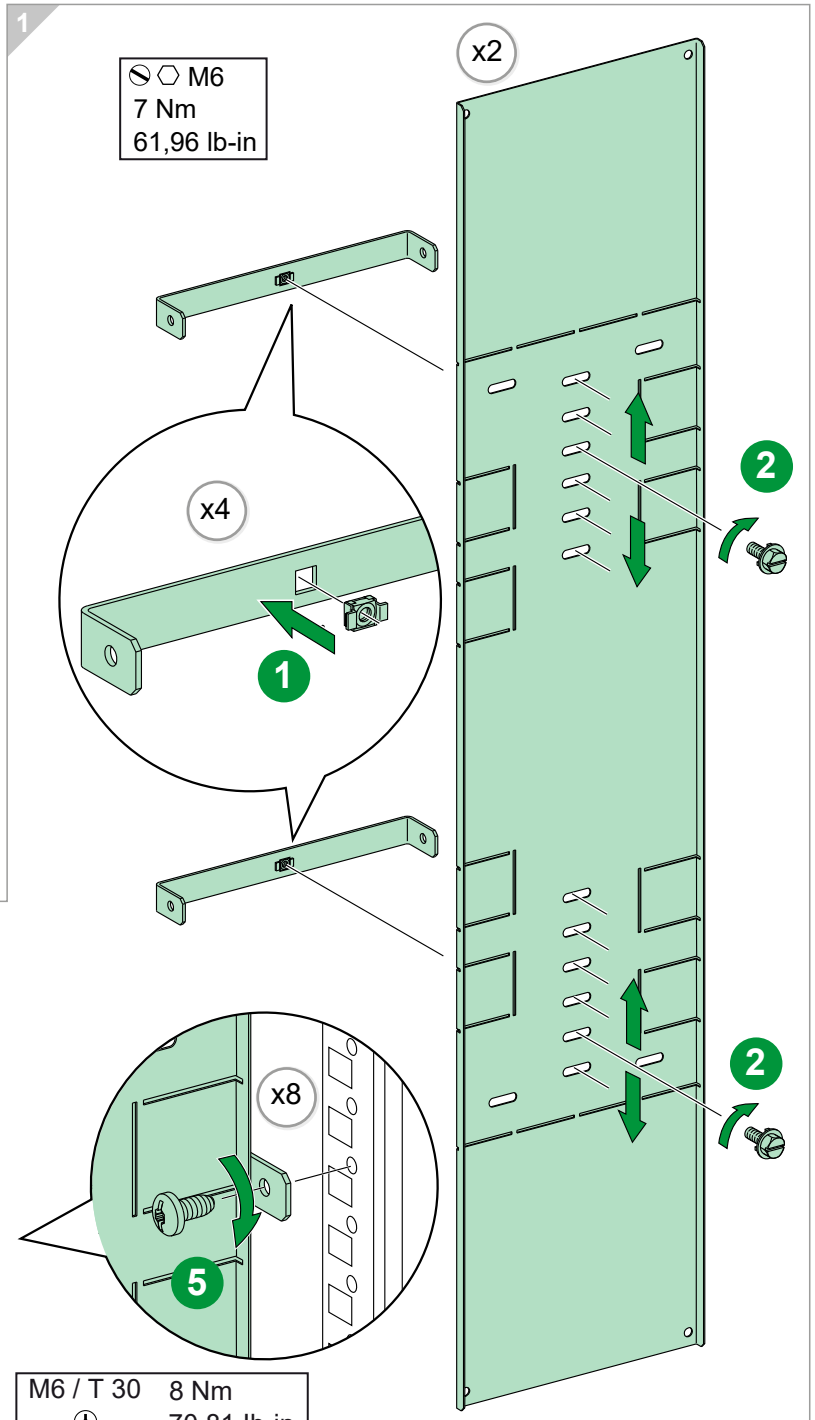
1
M6
7 Nm
61,96 lb-in
x2
x4
1
2
2
x8
5
M6 / T 30
8 Nm
70.81 lb-in

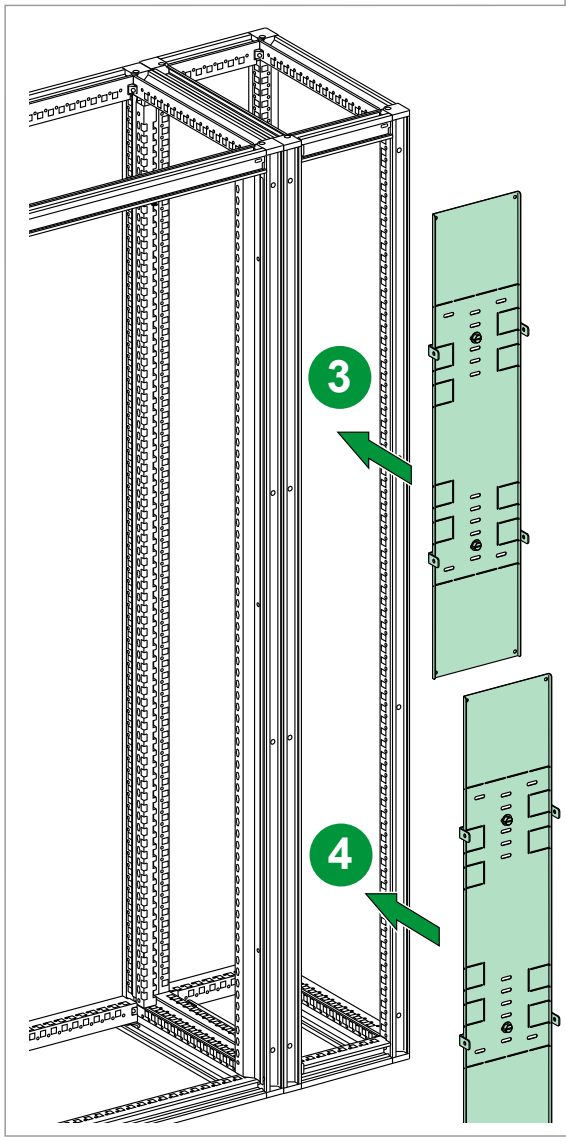
3
4

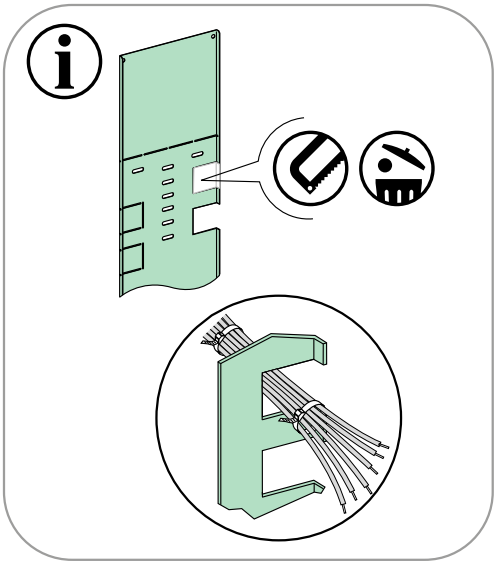

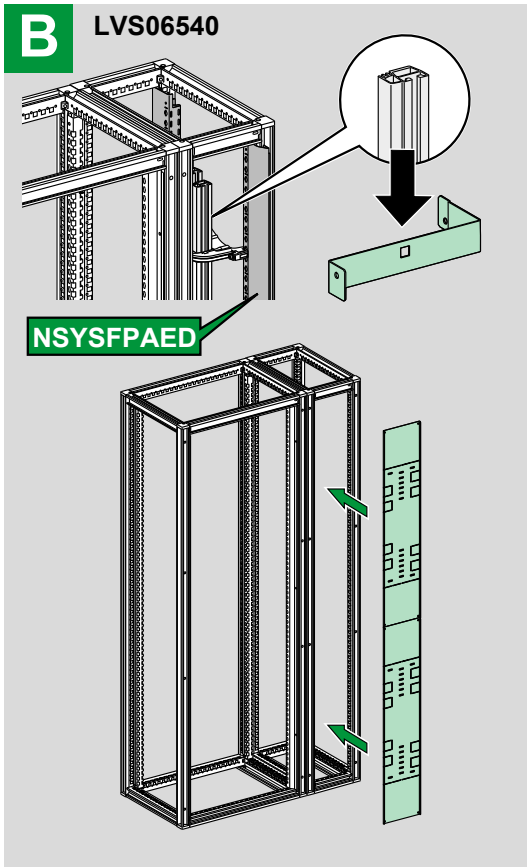
B
LVS06540
NSYSFPAED

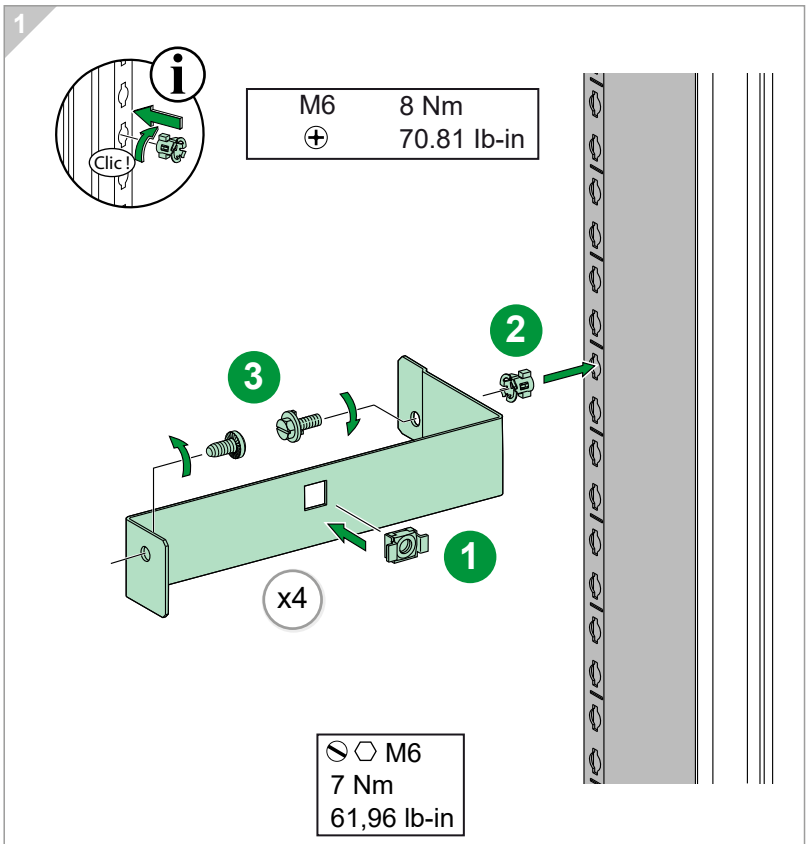
1
Clic !
M6 8 Nm
70.81 lb-in
2
3
1
x4
M6
7 Nm
61,96 lb-in

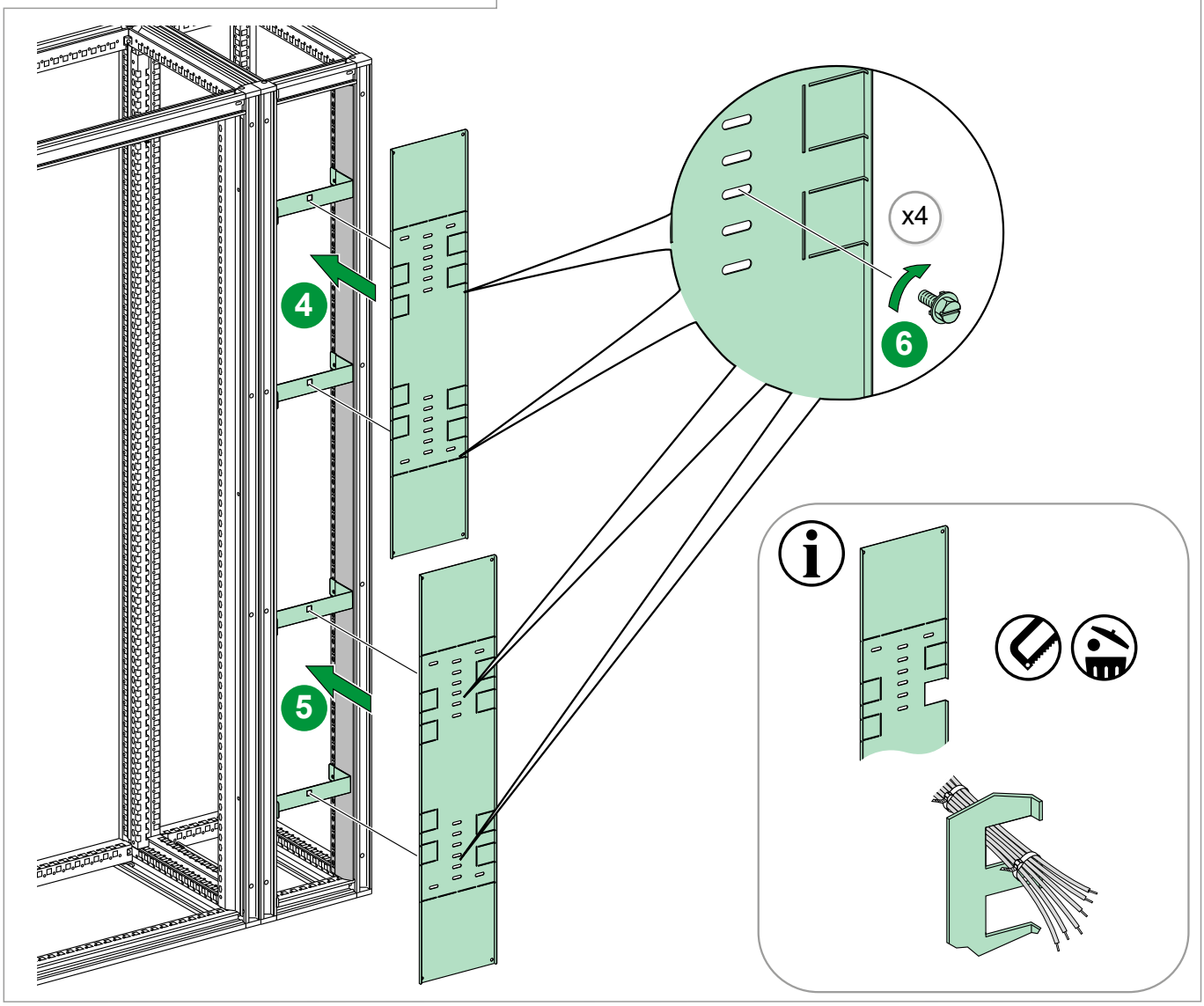
4
5
x4
6

LVS06555
LVS04911 + LVS06541
LVS04911 + LVS06543

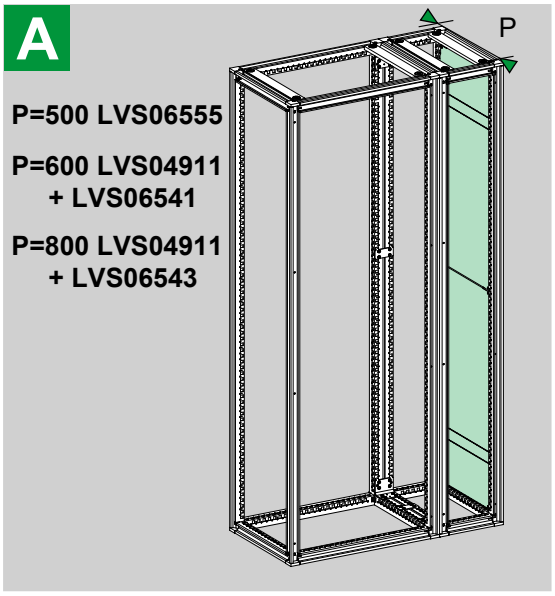

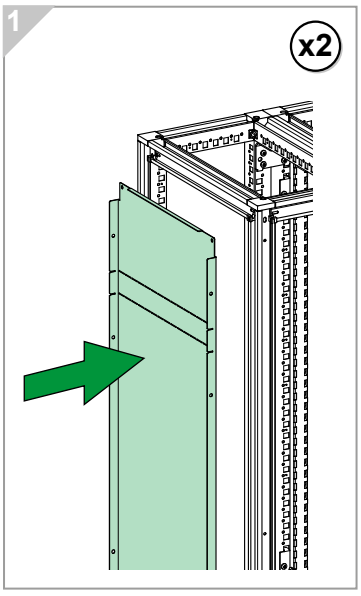

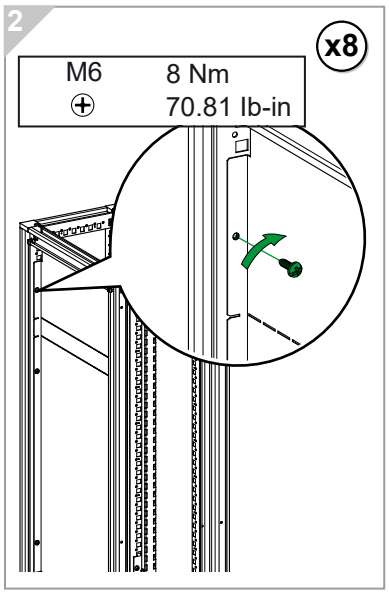

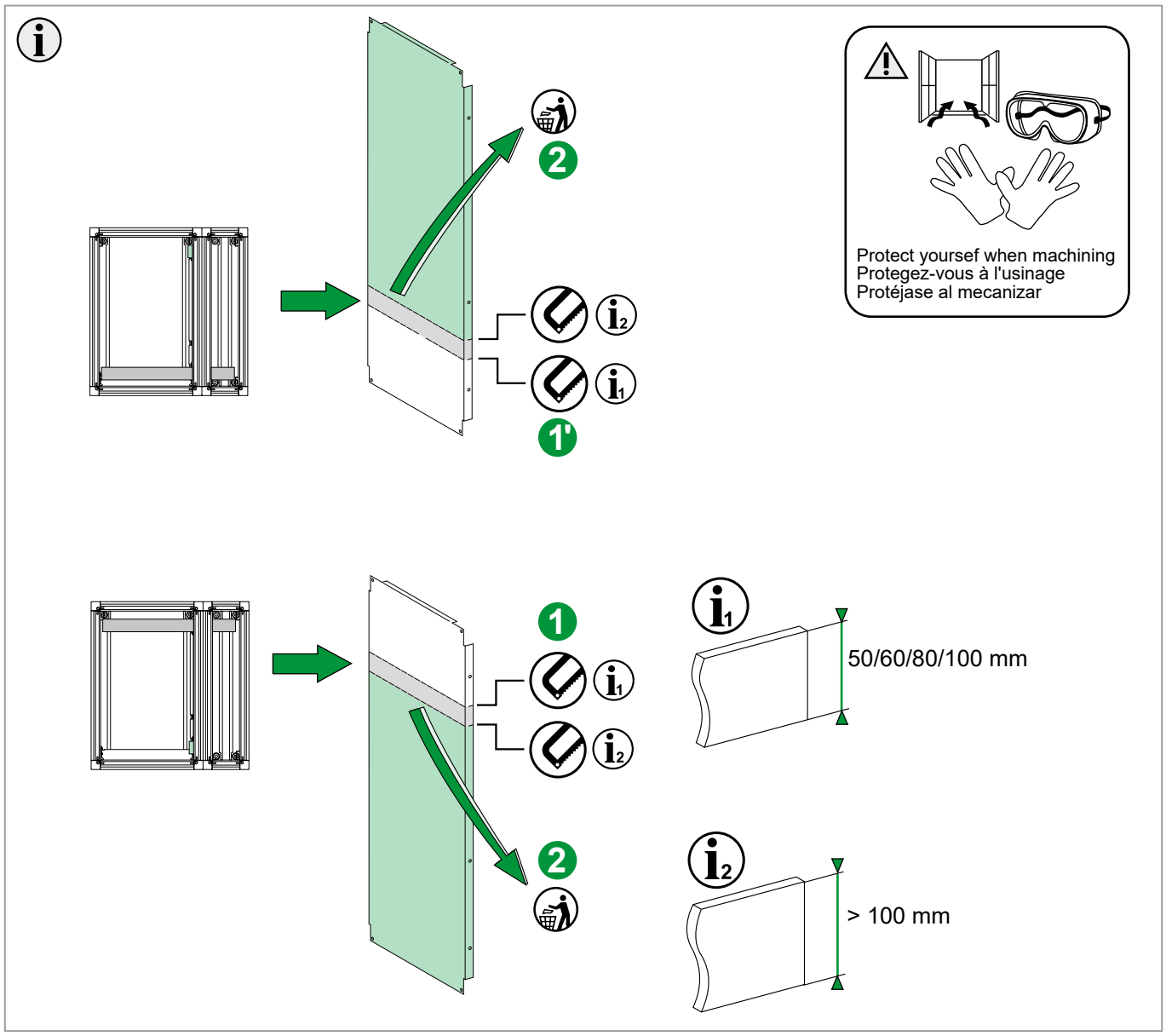

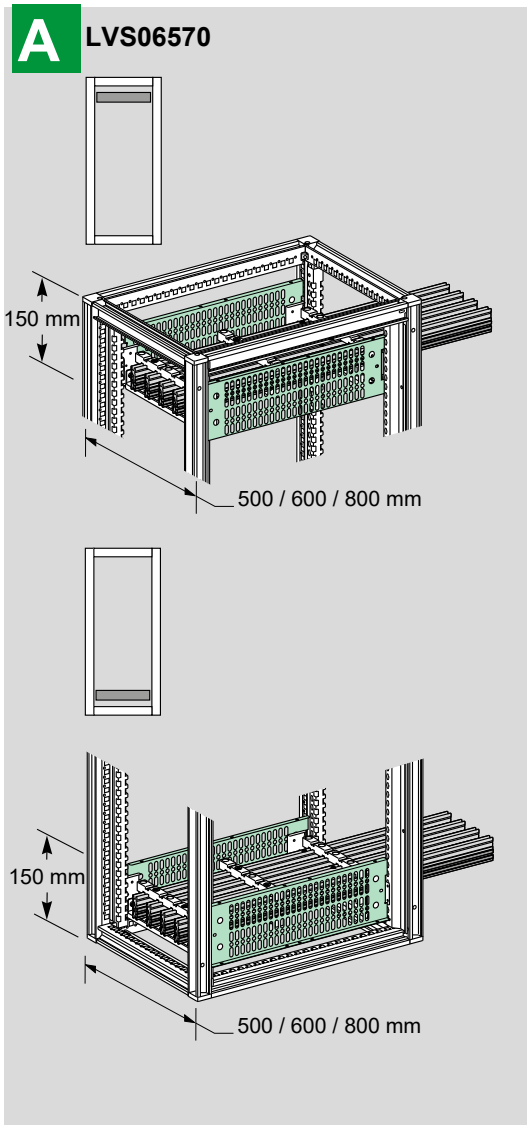
A
LVS06570
150 mm
500 / 600 / 800 mm
150 mm
500 / 600 / 800 mm

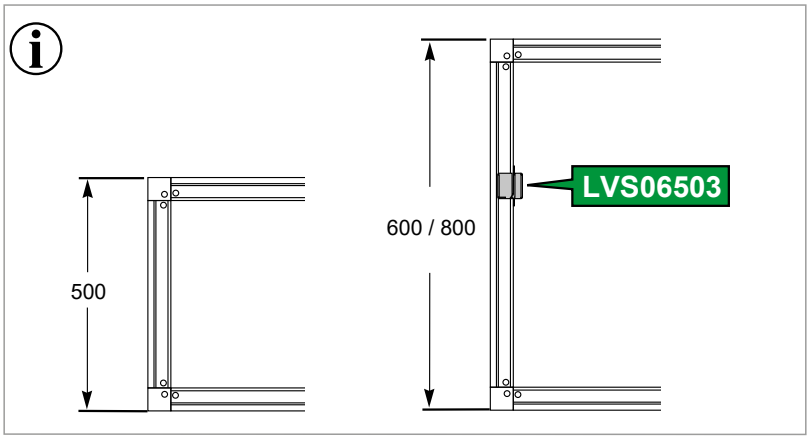
500
600 / 800
LVS06503

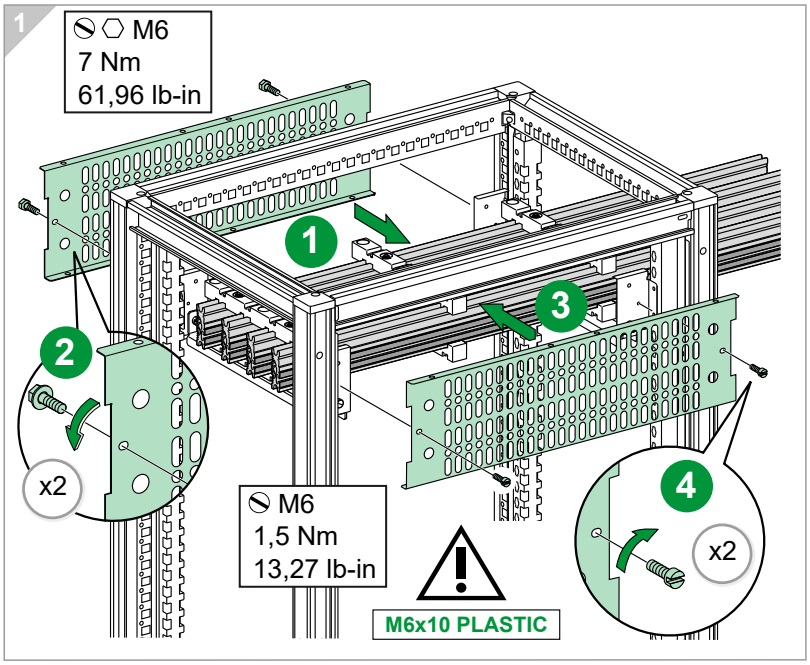
1
M6
7 Nm
61,96 lb-in
1
2
x2
3
4
x2
M6
1,5 Nm
13,27 lb-in
M6x10 PLASTIC

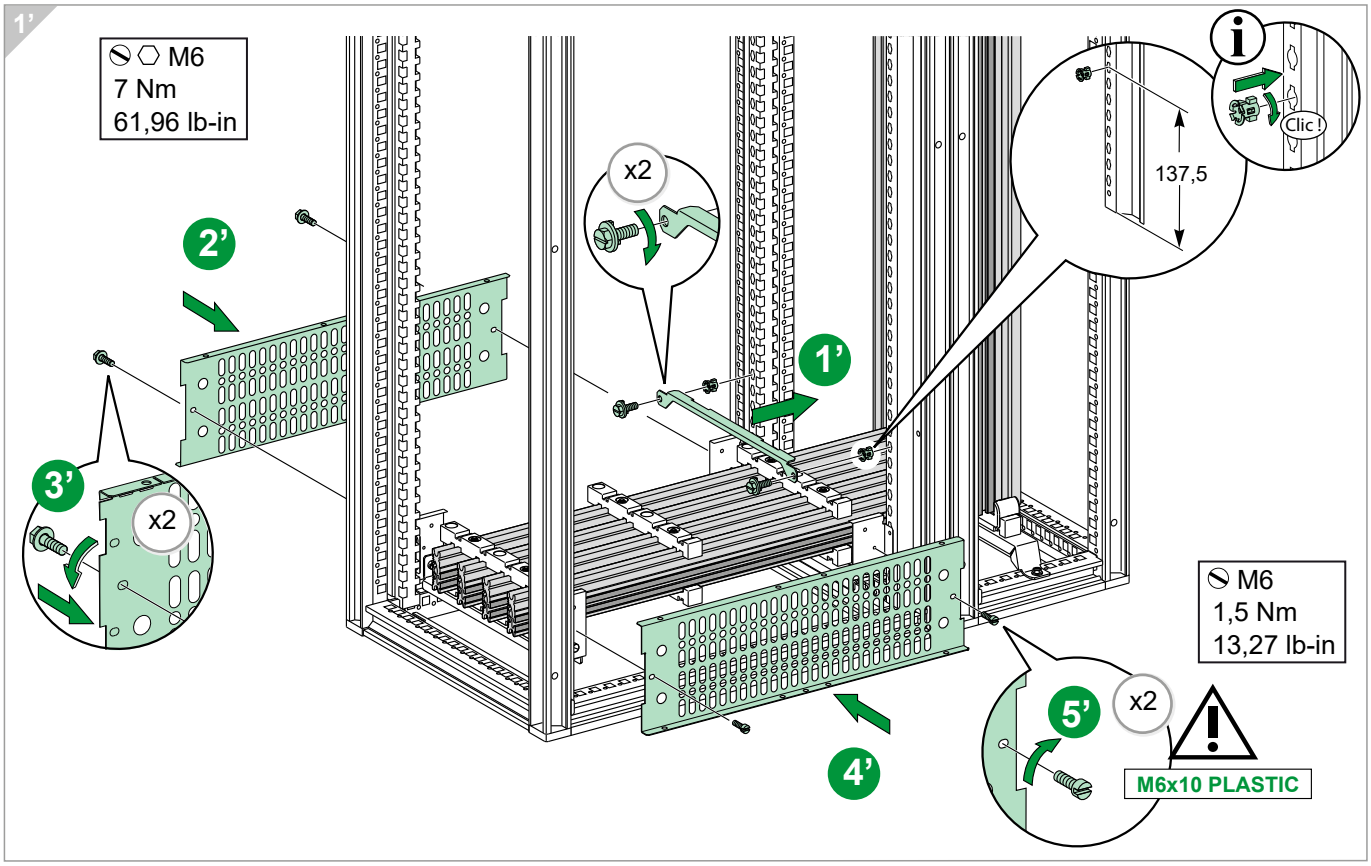
1'
M6
7 Nm
61,96 lb-in
2'
x2
1'
3'
x2
137,5
Clic !
M6
1,5 Nm
13,27 lb-in
5'
x2
4'
M6x10 PLASTIC

B LVS06570

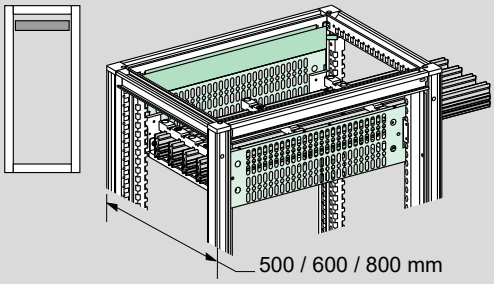

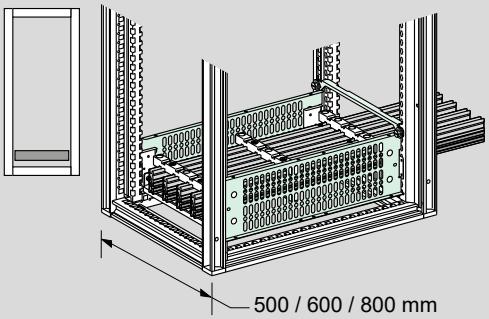

1 P= 500 mm

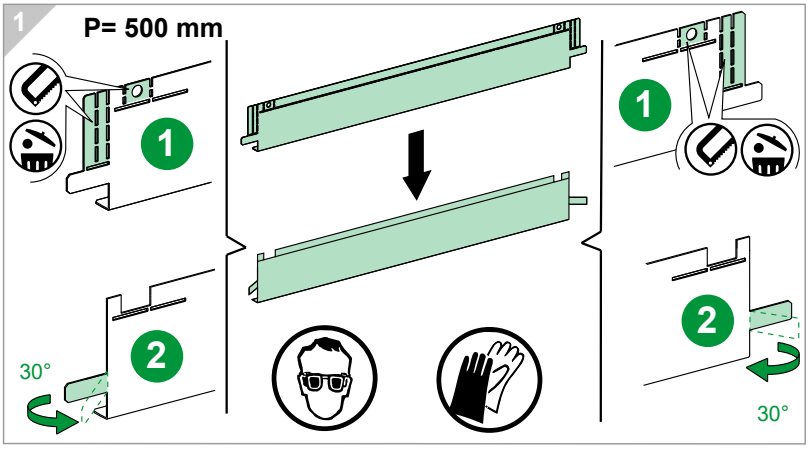

1' P= 600 / 800 mm

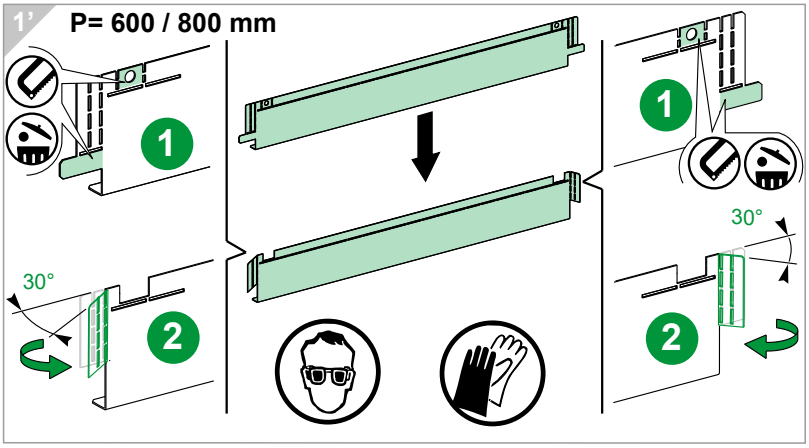

2

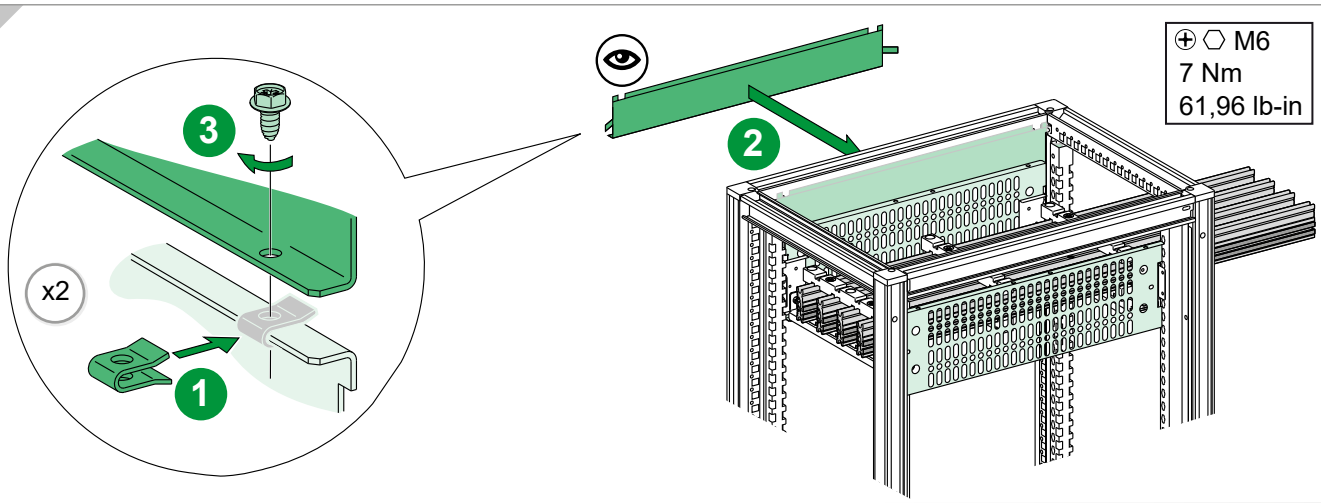

2'

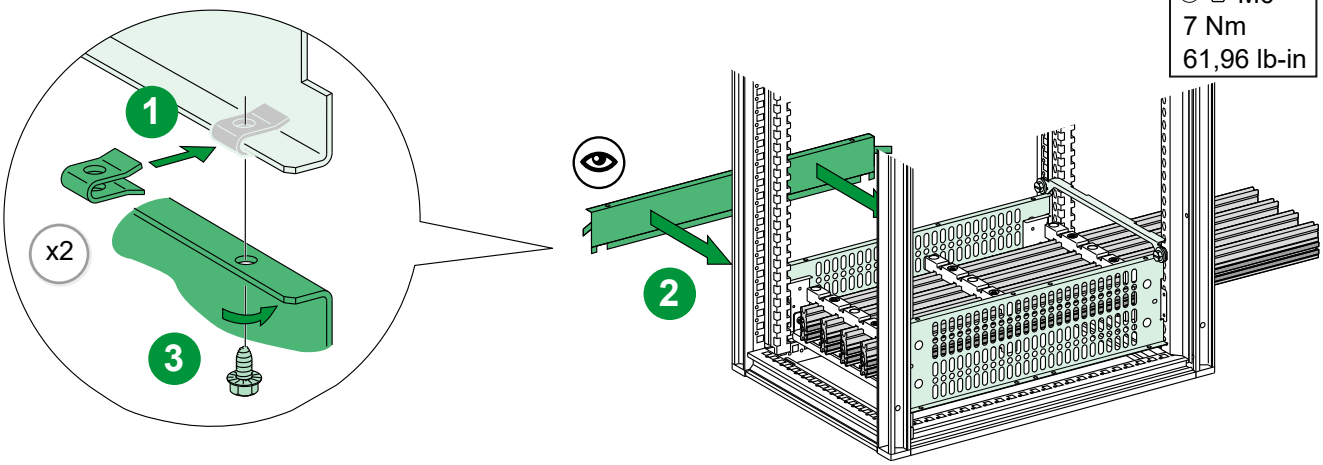

C LVS06570

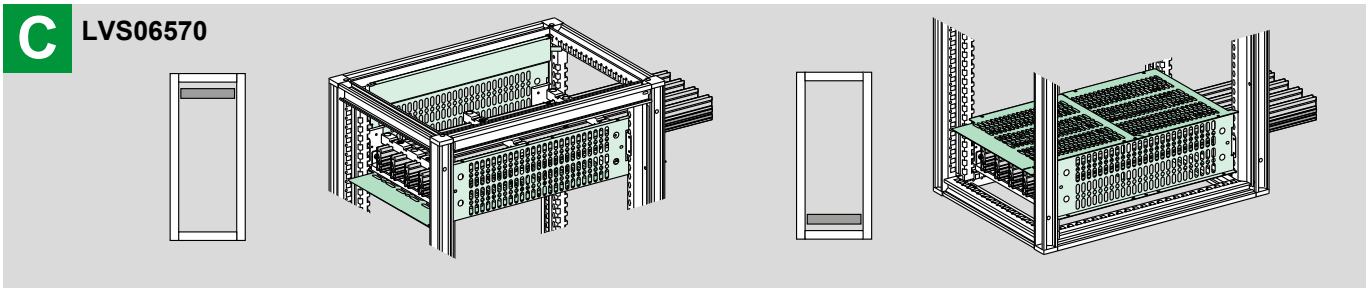

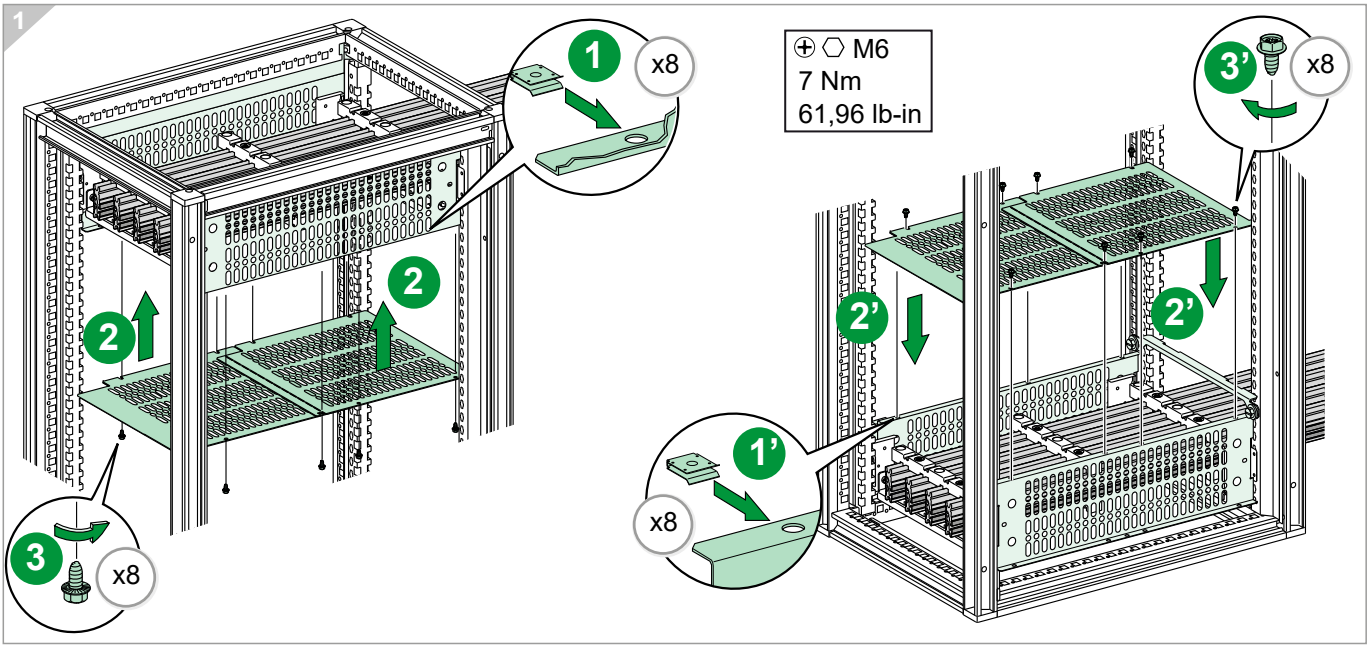

D LVS06570

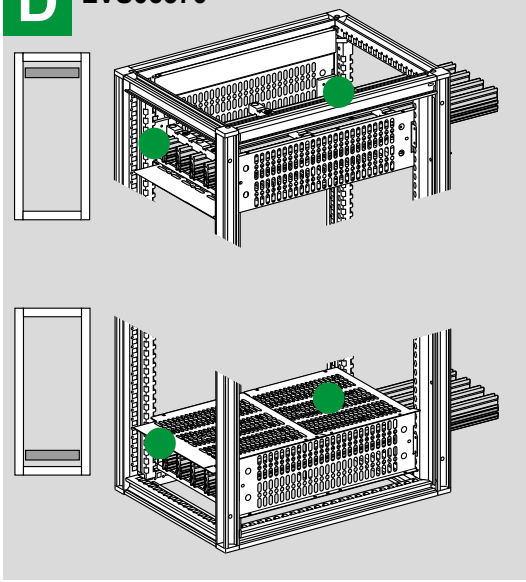

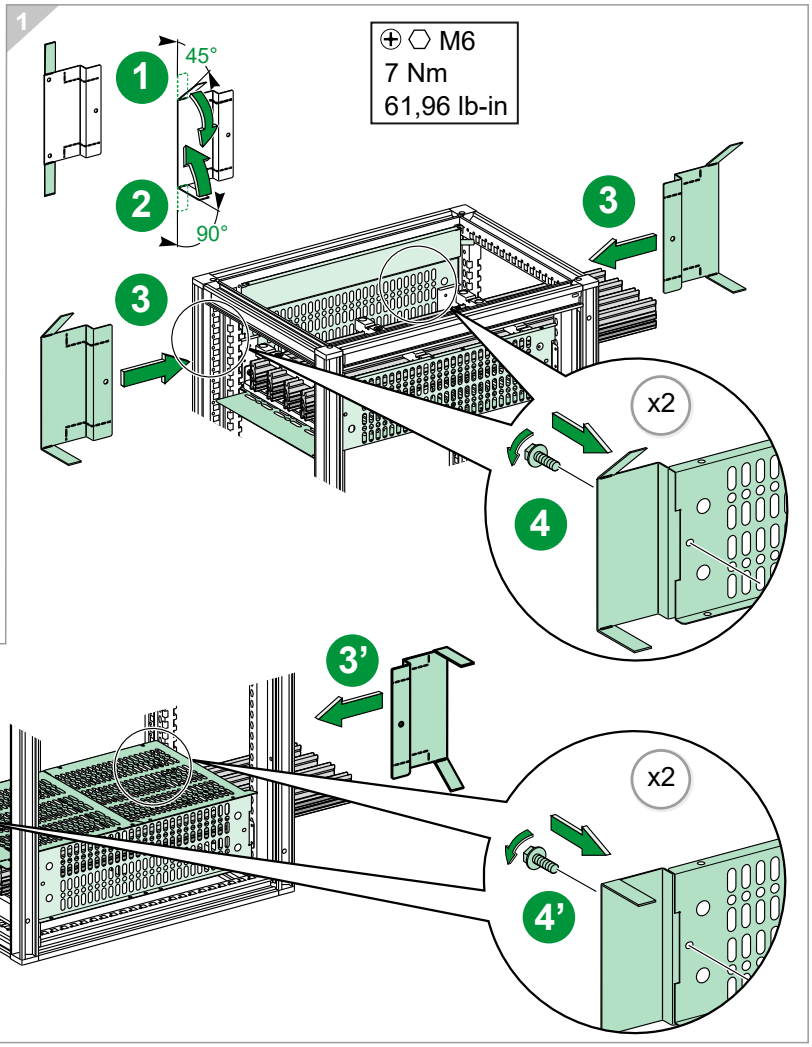

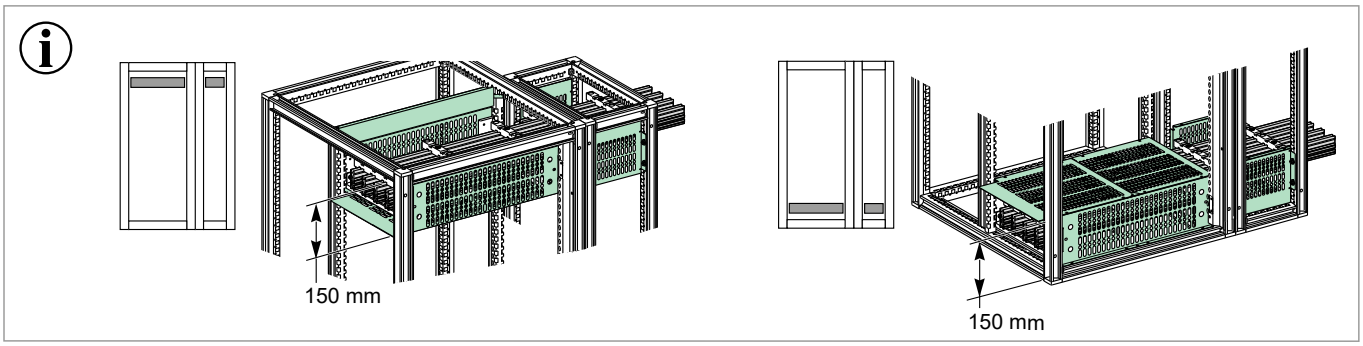
150 mm
150 mm

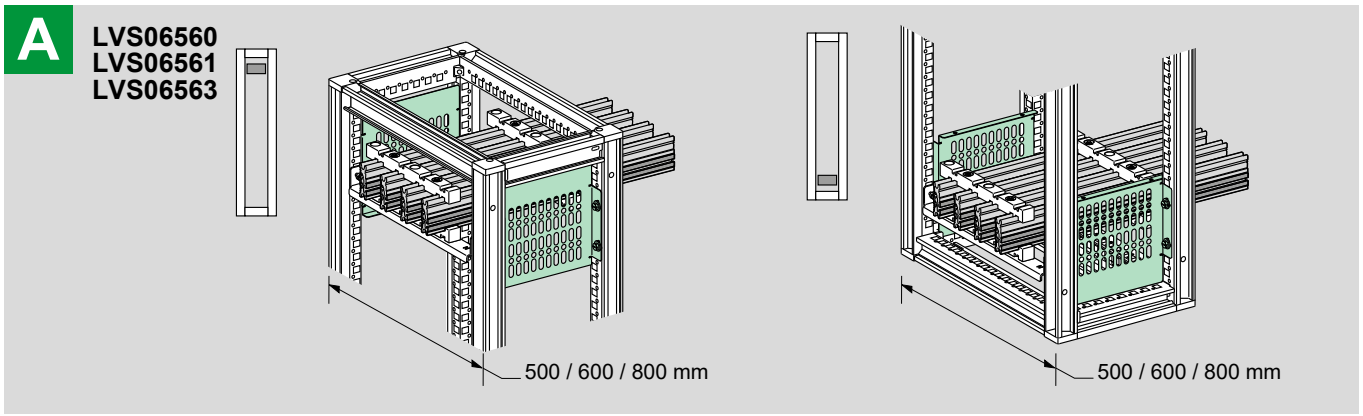
A
LVS06560
LVS06561
LVS06563
500 / 600 / 800 mm
500 / 600 / 800 mm

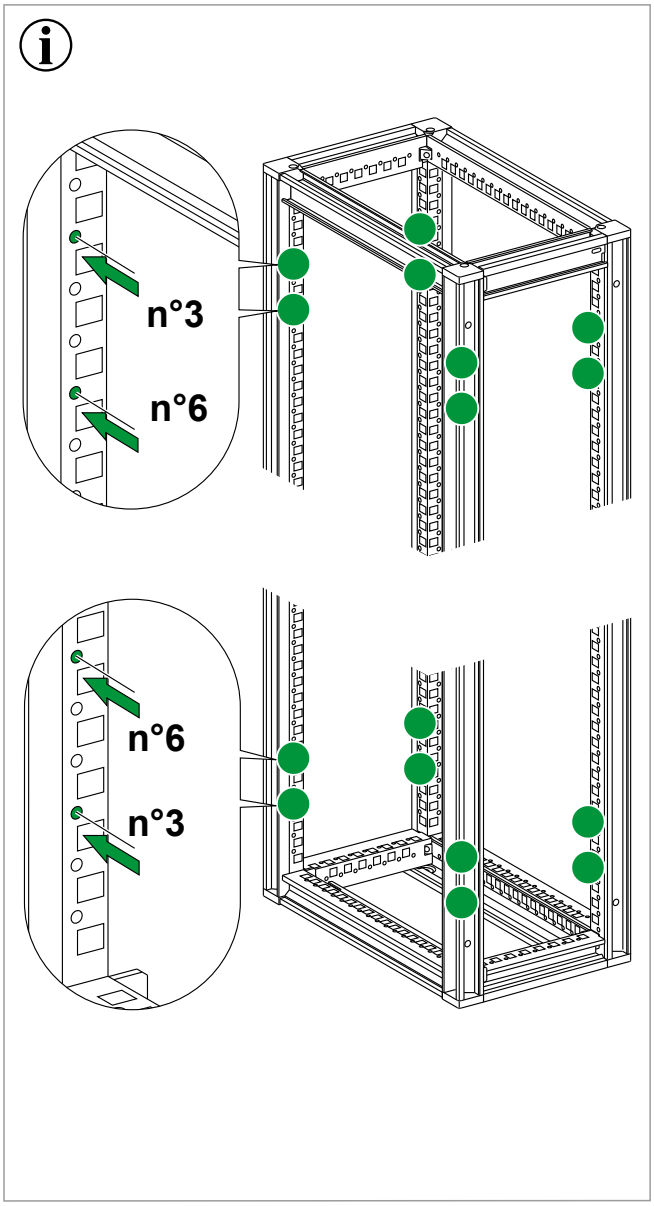
n°3
n°6
n°6
n°3

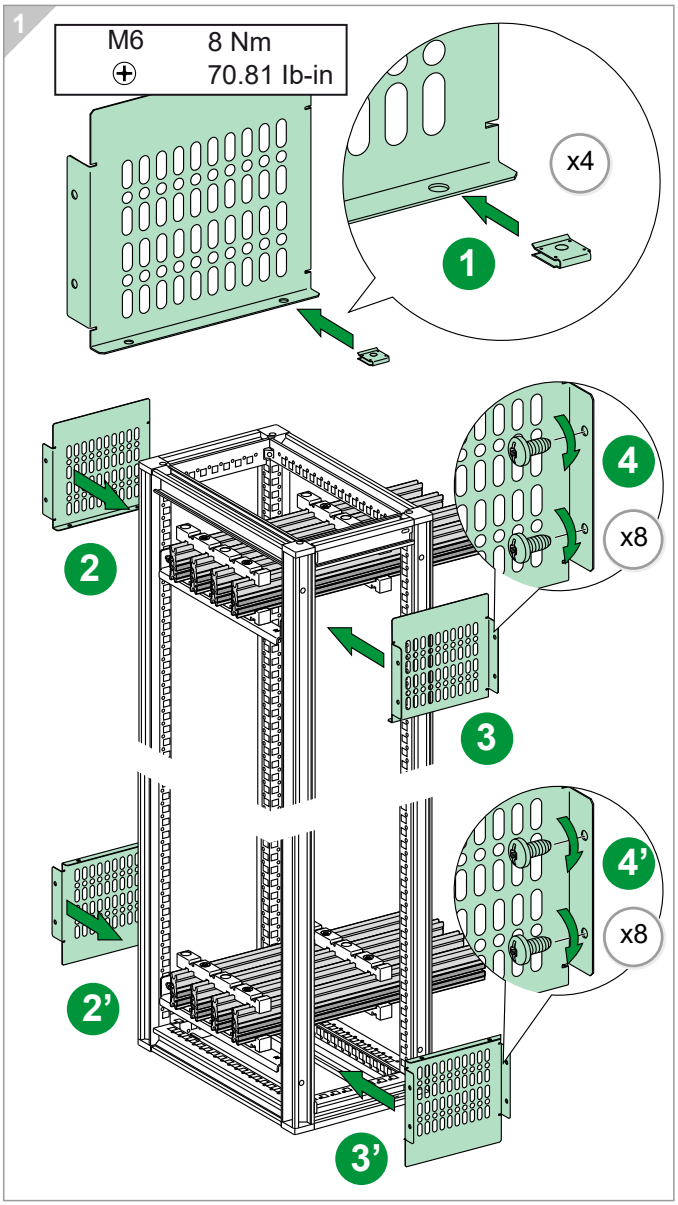
1
M6
8 Nm
70.81 lb-in
x4
1
2
4
x8
3
2'
4'
x8
3'

B

LVS06560
LVS06561
LVS06563

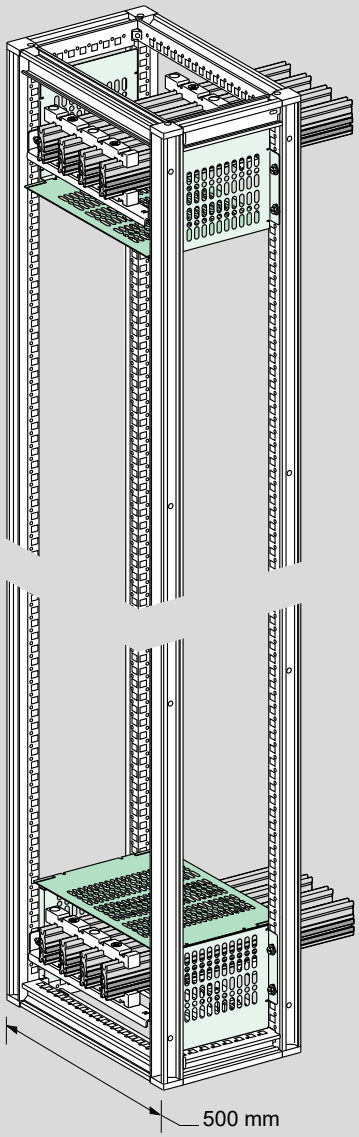

1

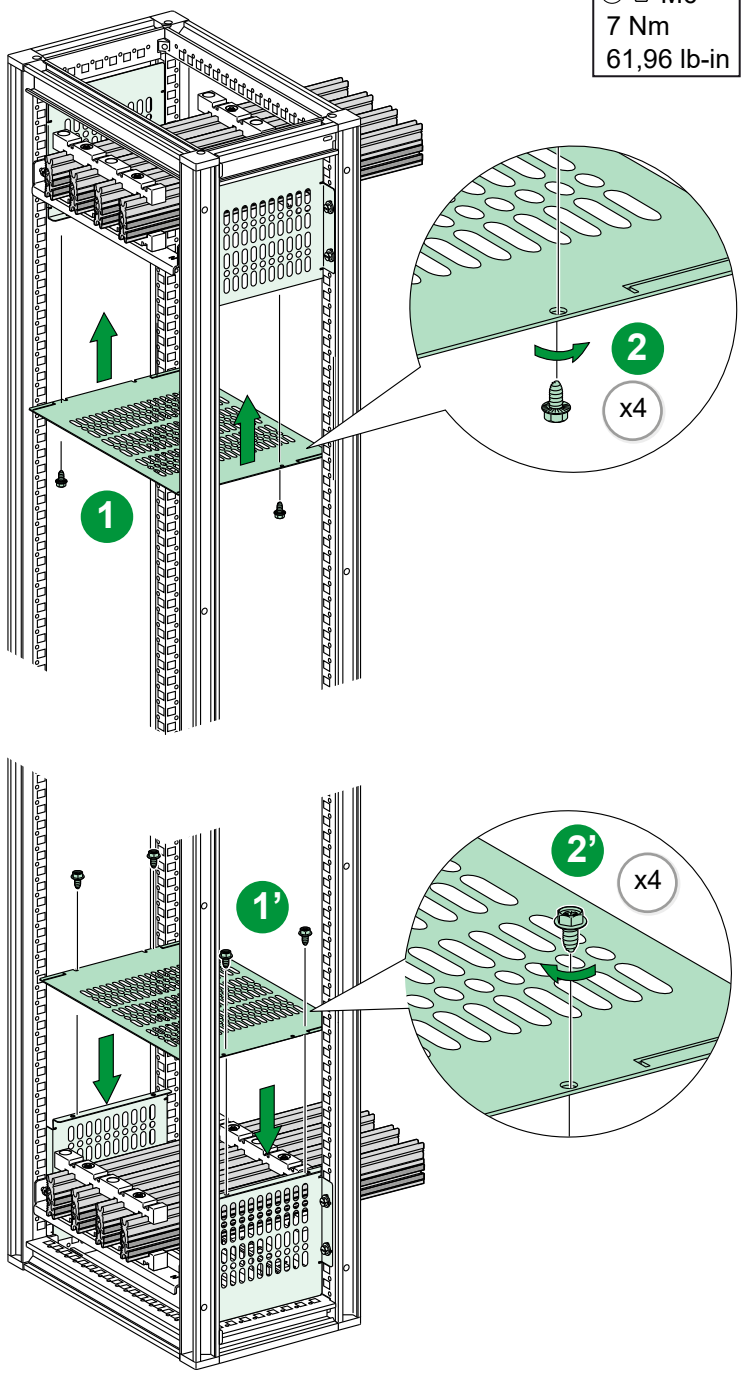

C

LVS06560
LVS06561
LVS06563

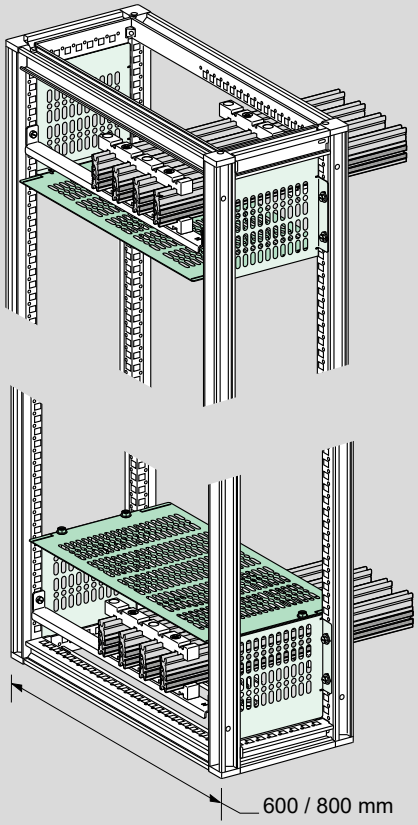

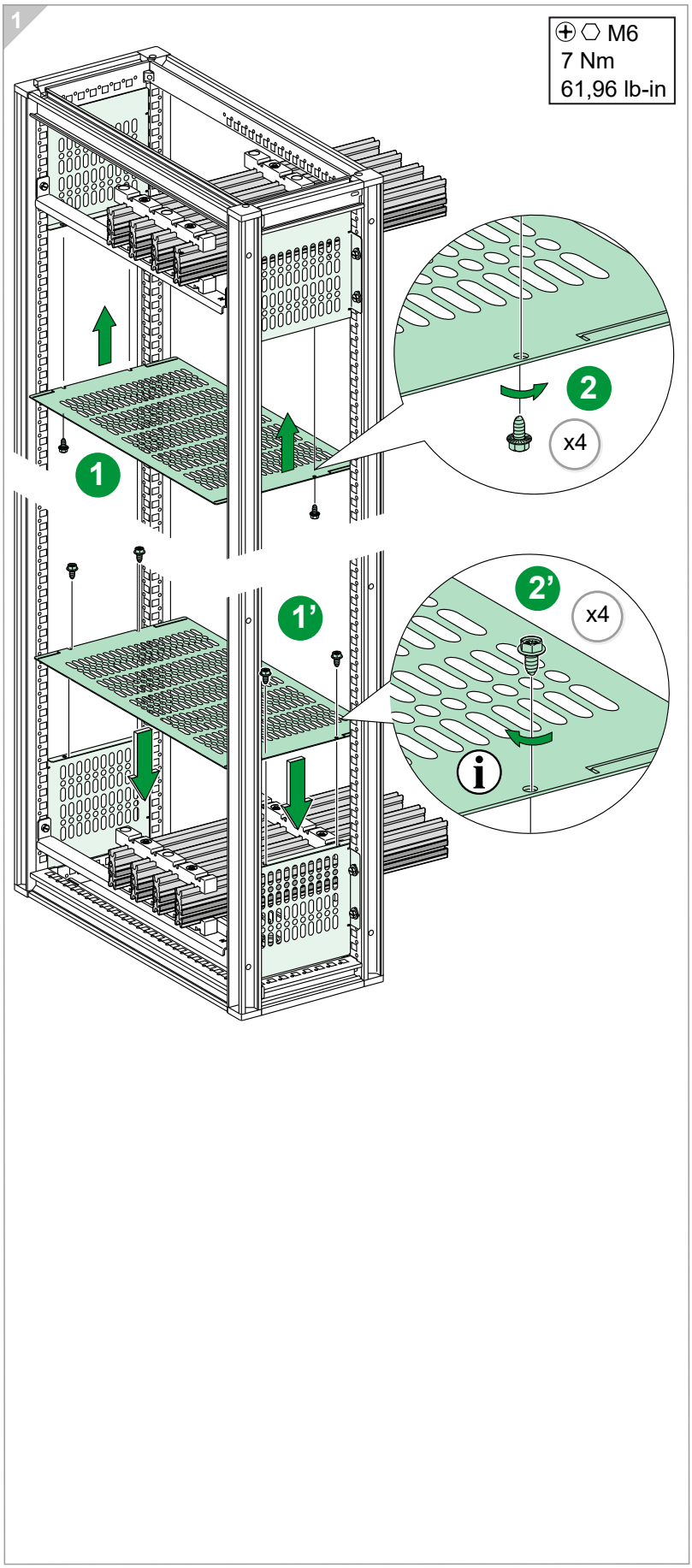

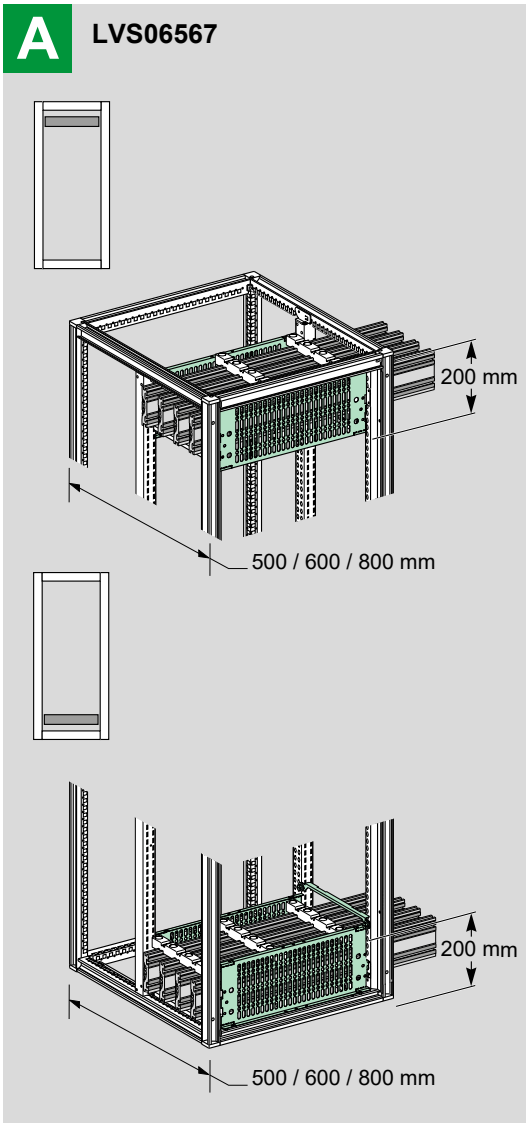
A
LVS06567
200 mm
500 / 600 / 800 mm
200 mm
500 / 600 / 800 mm

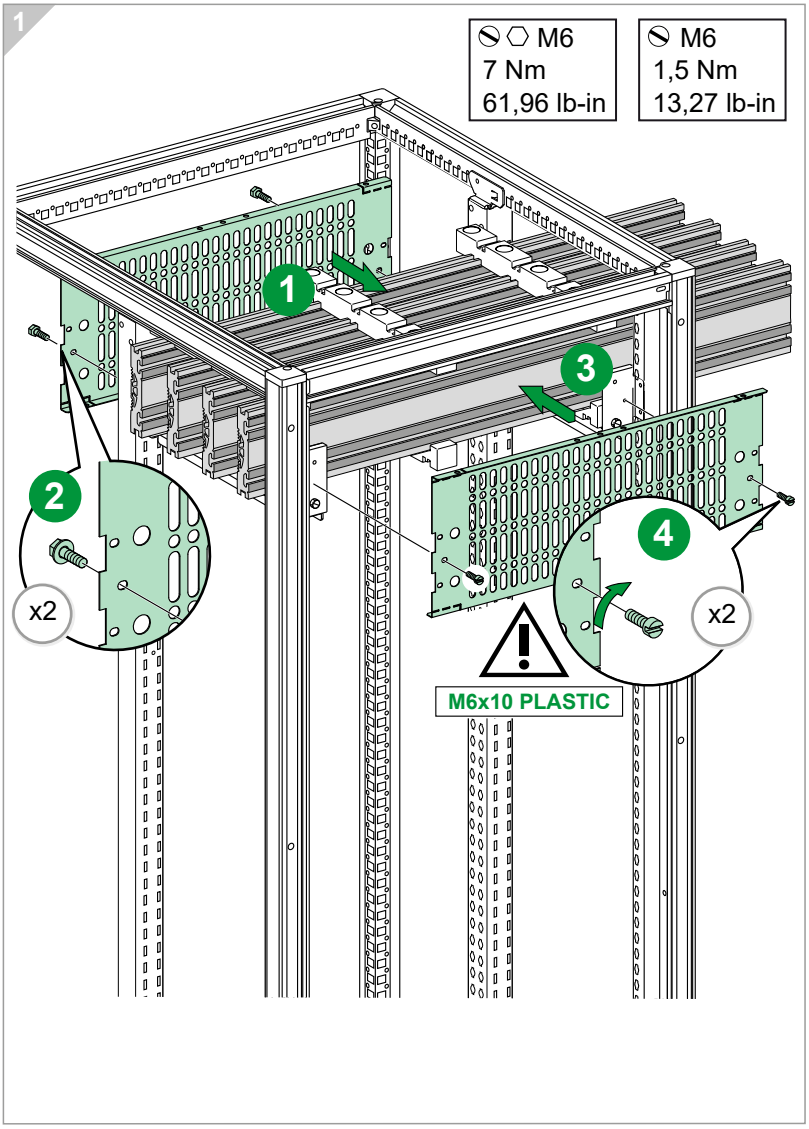
1
M6
7 Nm
61,96 lb-in
M6
1,5 Nm
13,27 lb-in
1
2
x2
3
4
x2
M6x10 PLASTIC

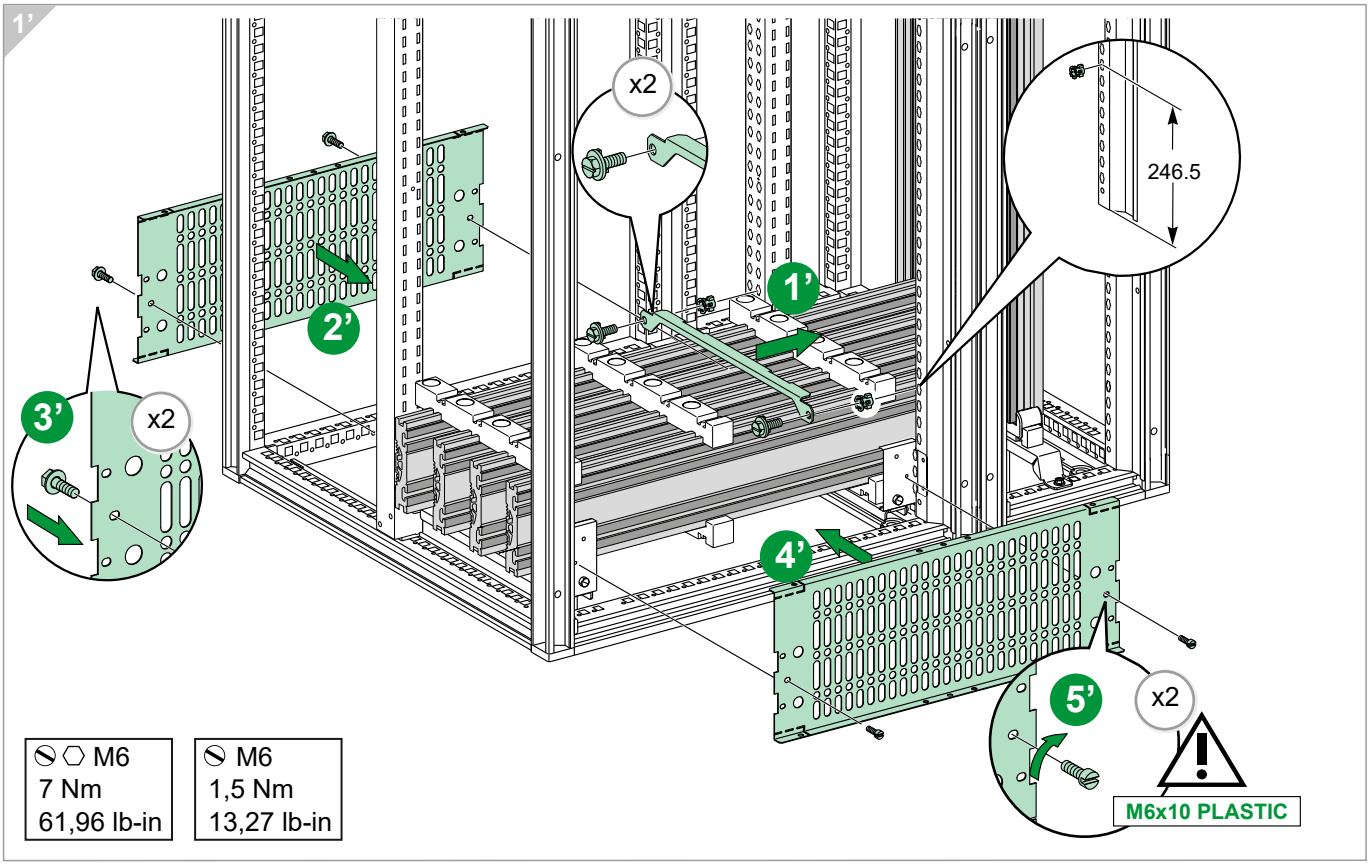
1'
x2
246.5
1'
2'
3'
x2
4'
5'
x2
M6x10 PLASTIC
M6
7 Nm
61,96 lb-in
M6
1,5 Nm
13,27 lb-in

B LVS06567

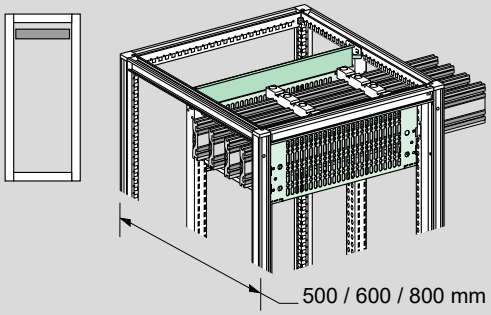

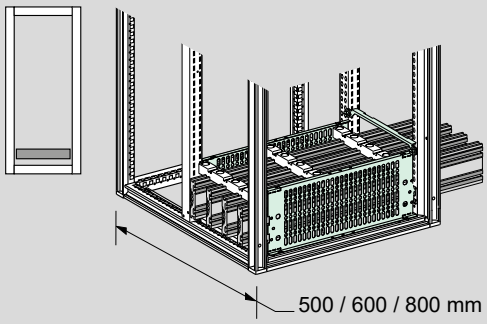

1

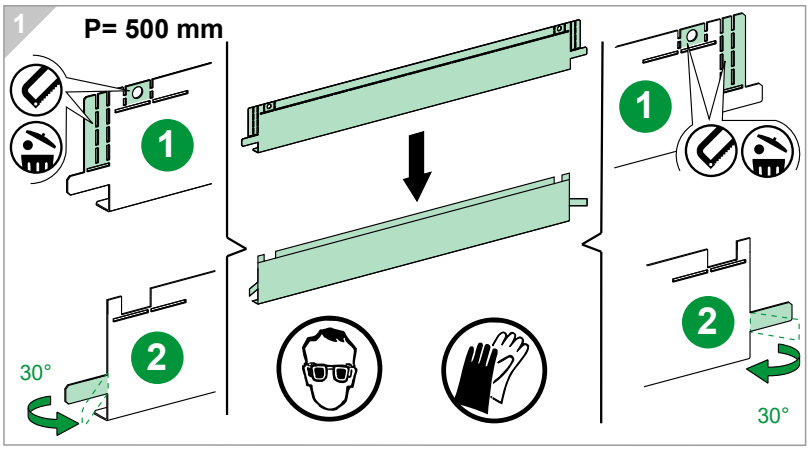

1'

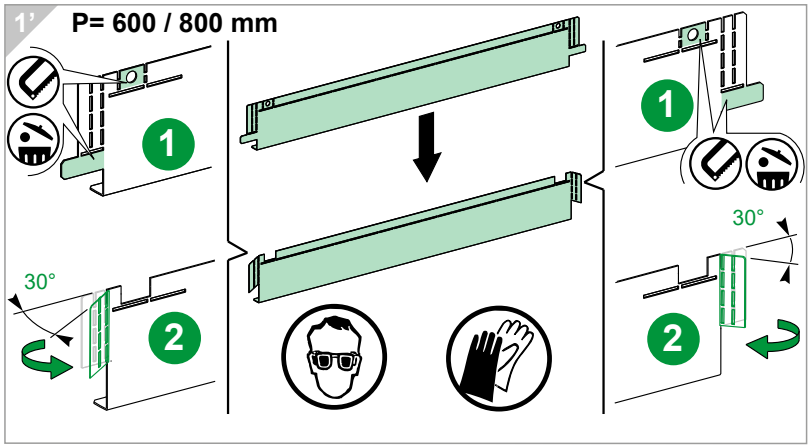

2

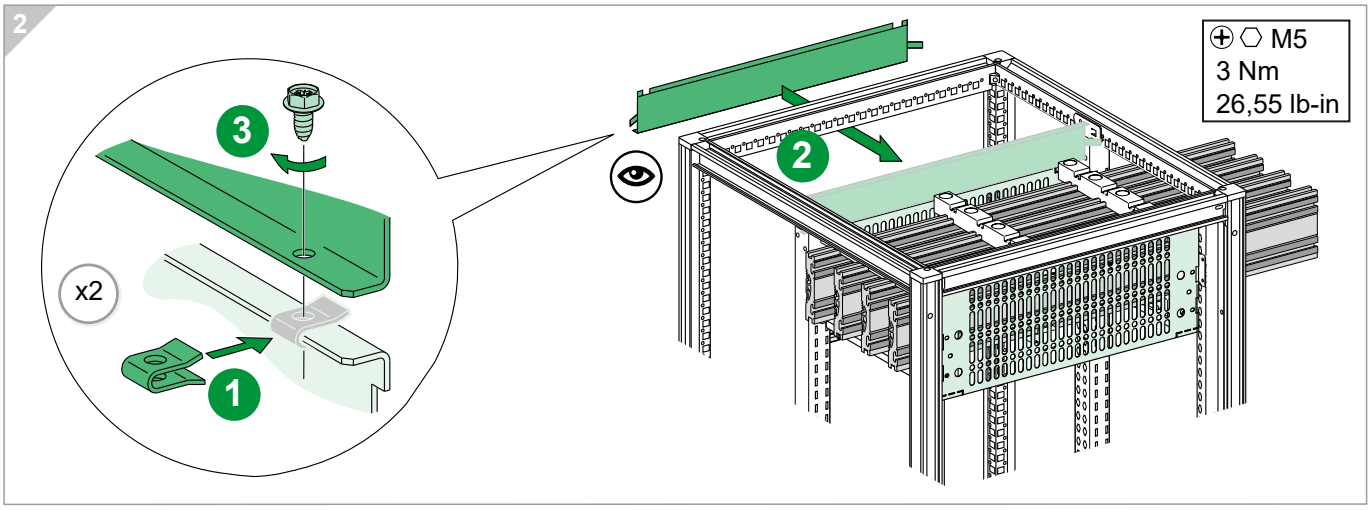

2'

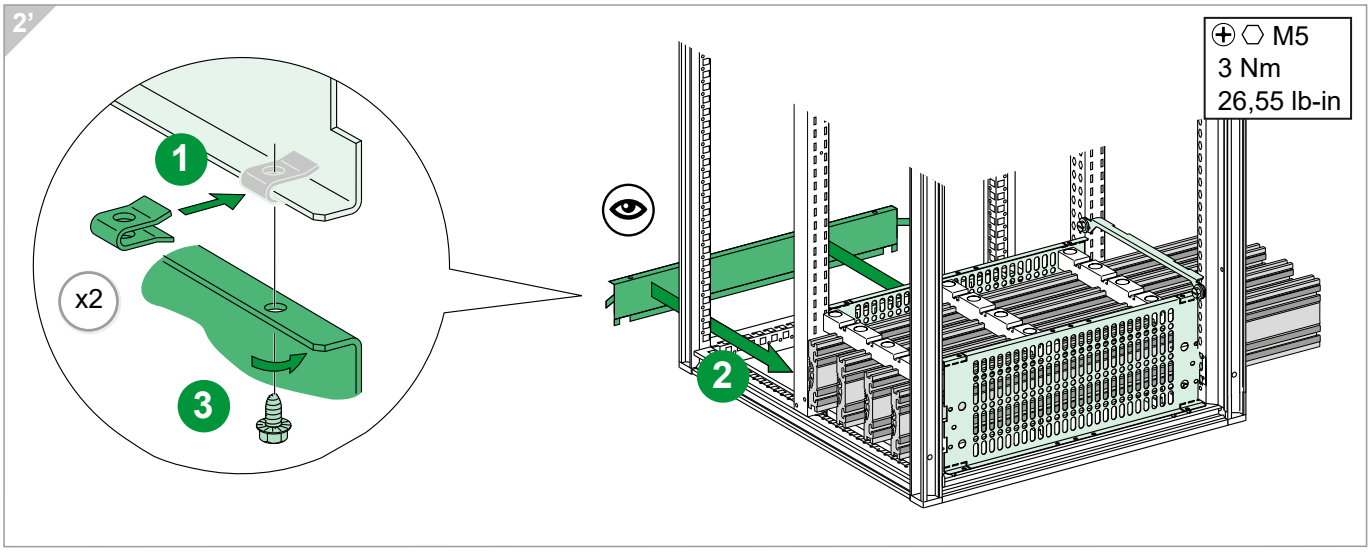

C LVS06567

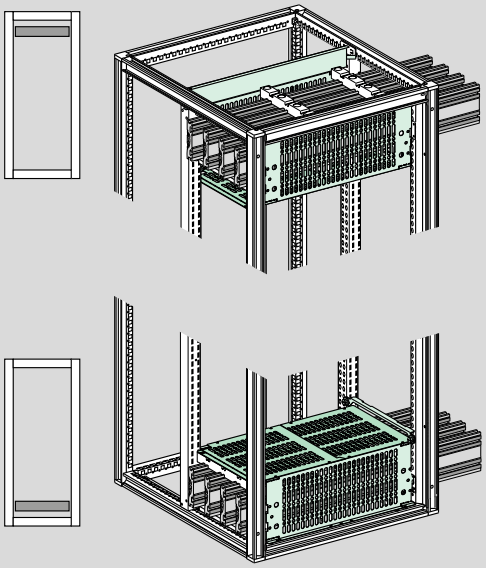

1

⊕ ⬡ M5
3 Nm
26,55 lb-in

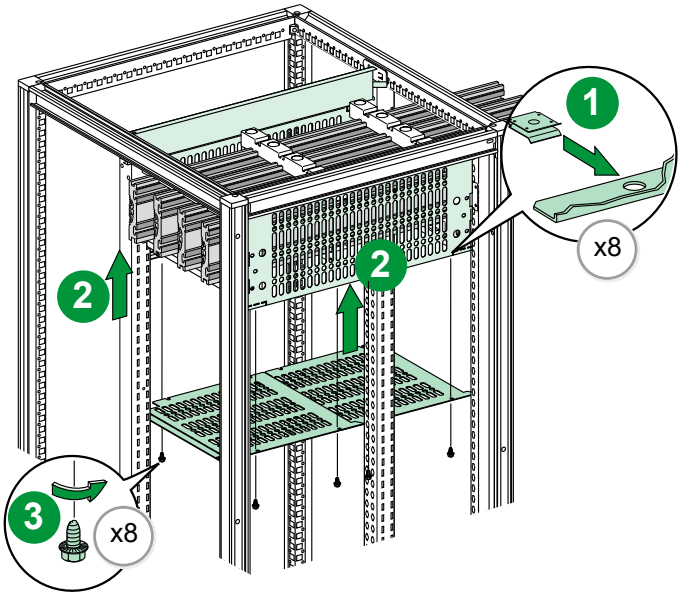

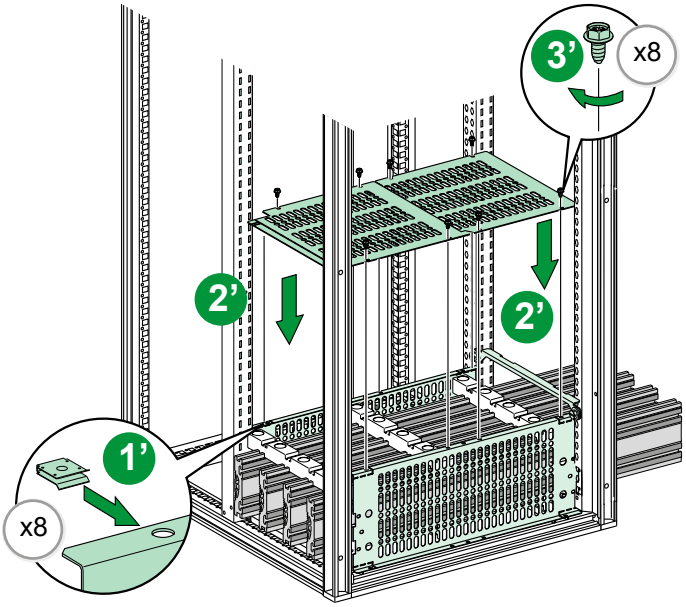

D LVS06567

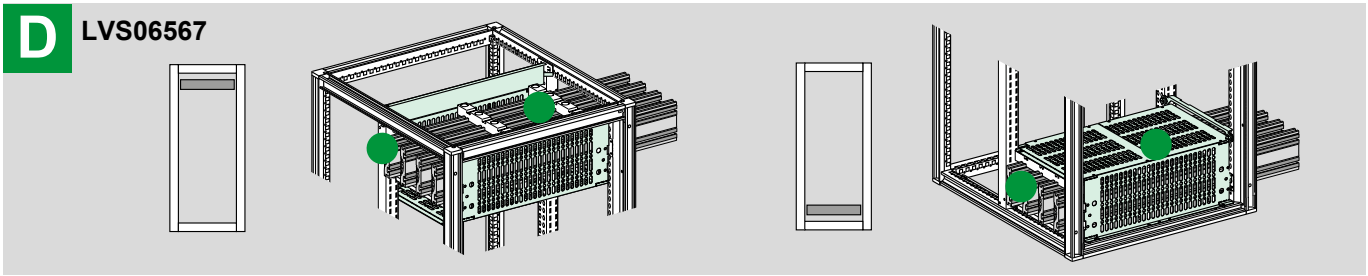

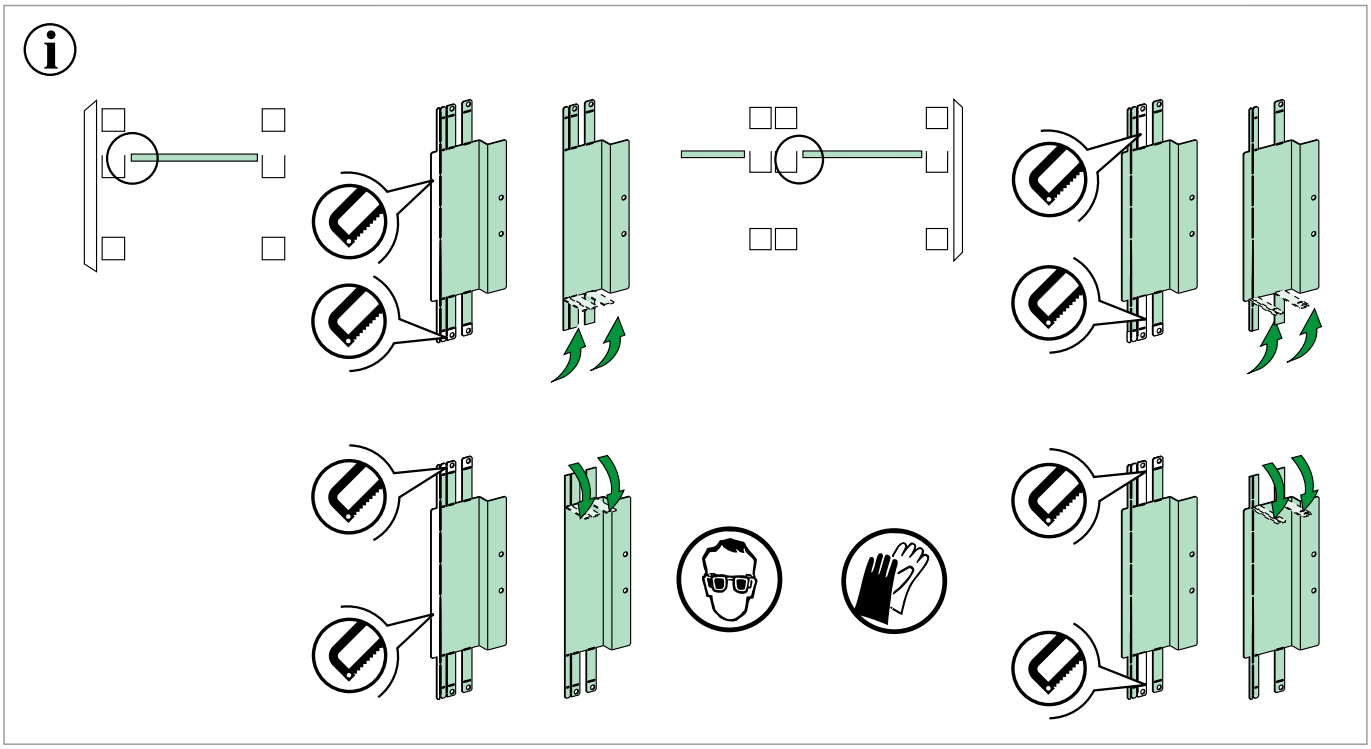

1

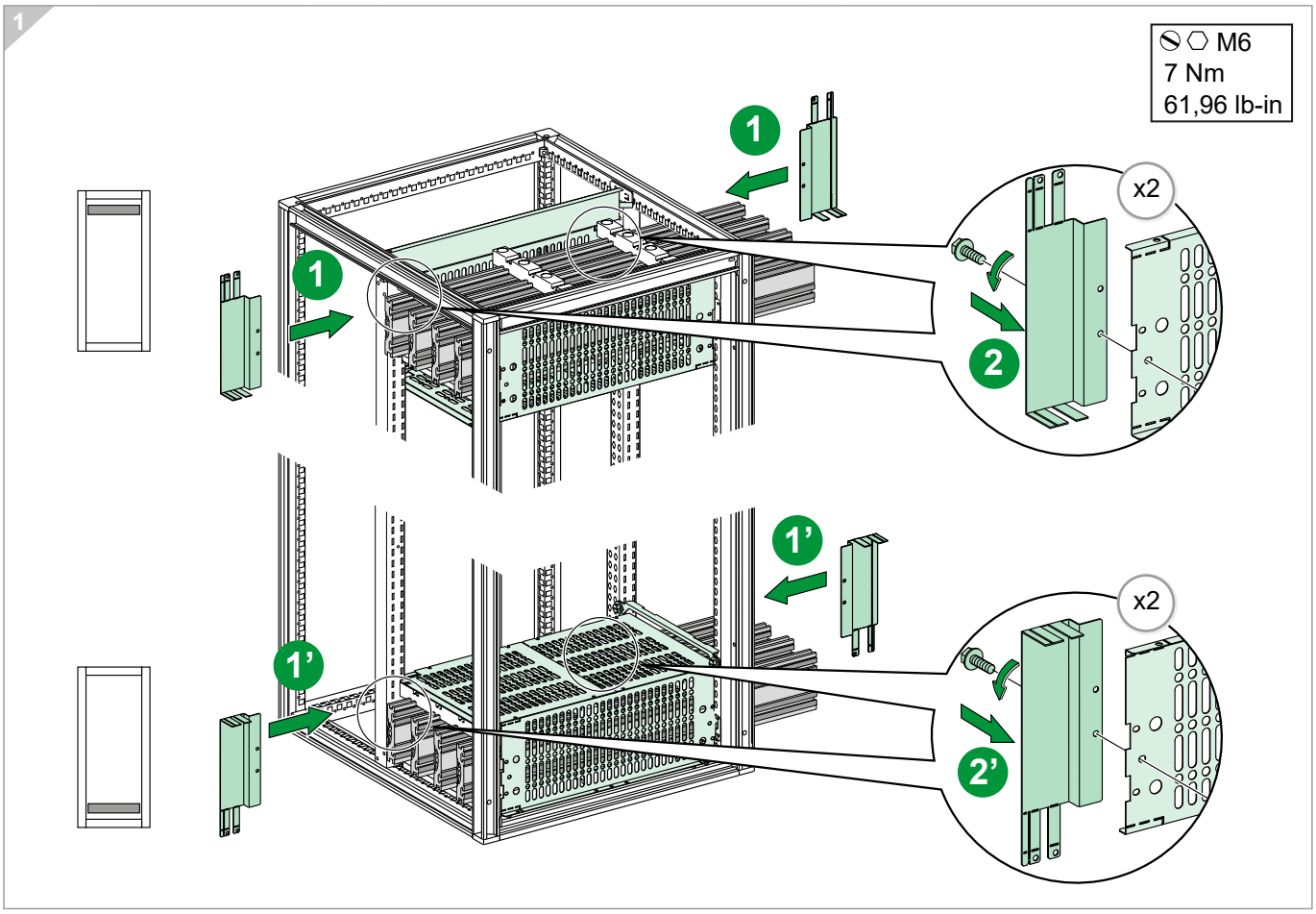

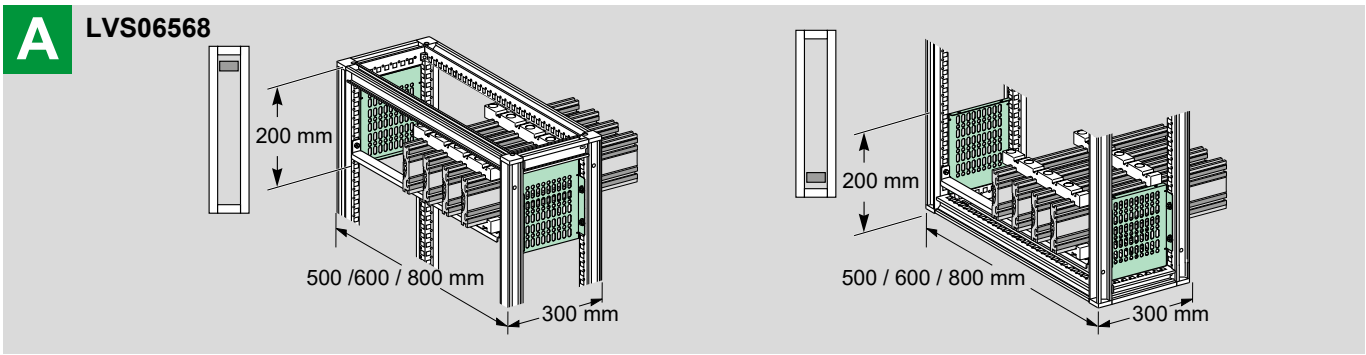
A
LVS06568
200 mm
500 /600 / 800 mm
300 mm
200 mm
500 / 600 / 800 mm
300 mm

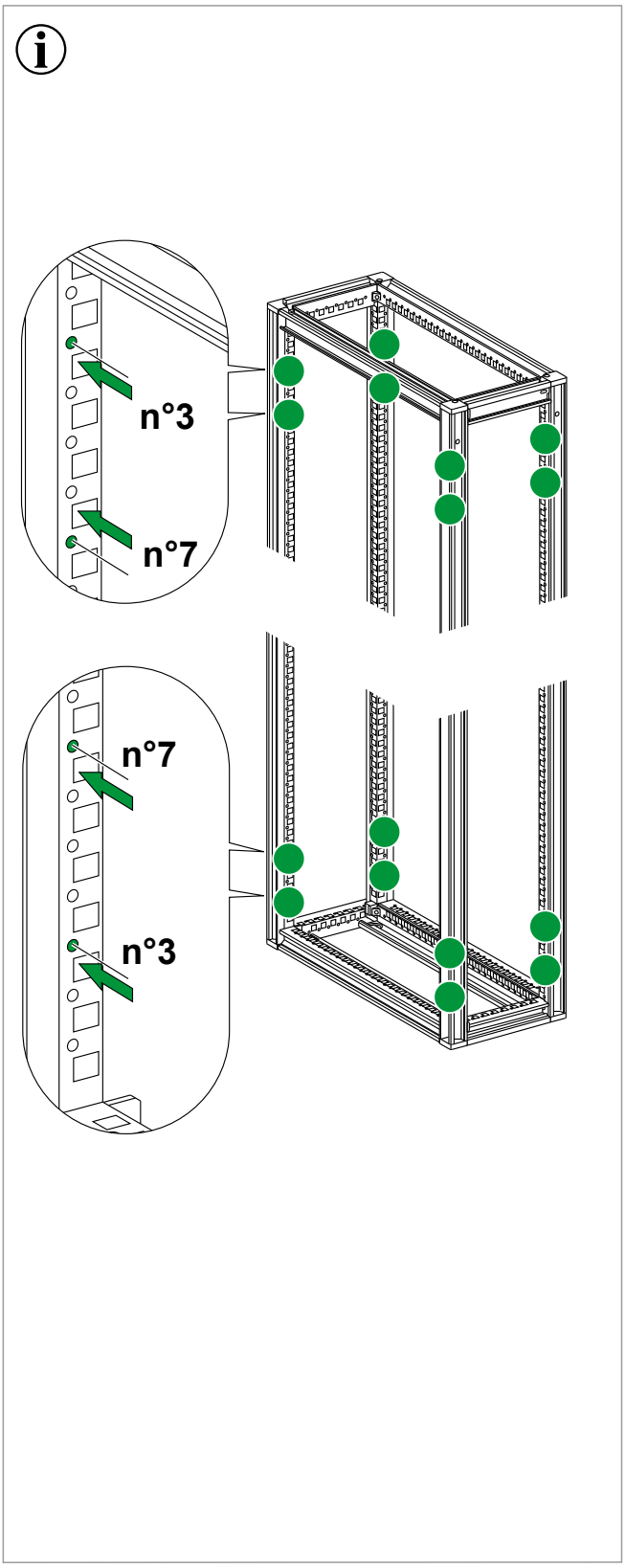
n°3
n°7
n°7
n°3

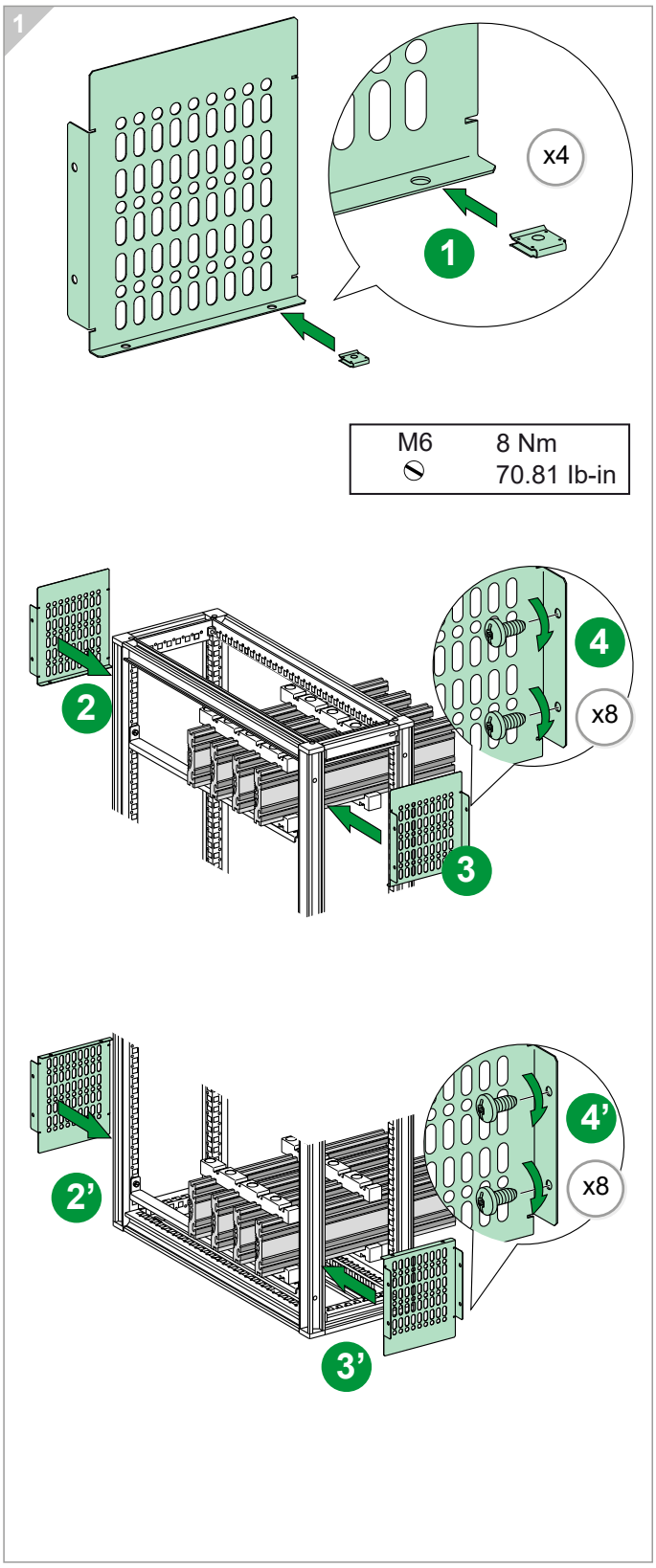
1
x4
1
M6
8 Nm
70.81 lb-in
2
4
x8
3
2'
4'
x8
3'

B **LVS06568**

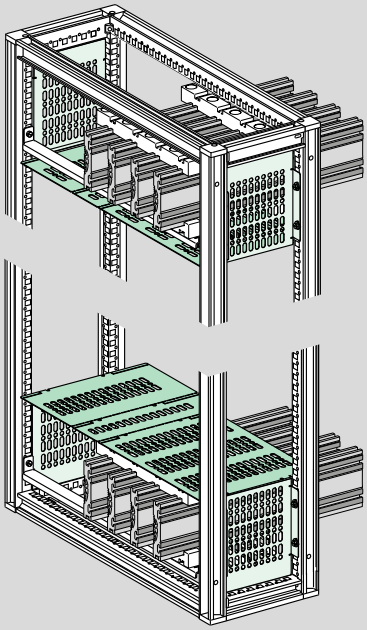

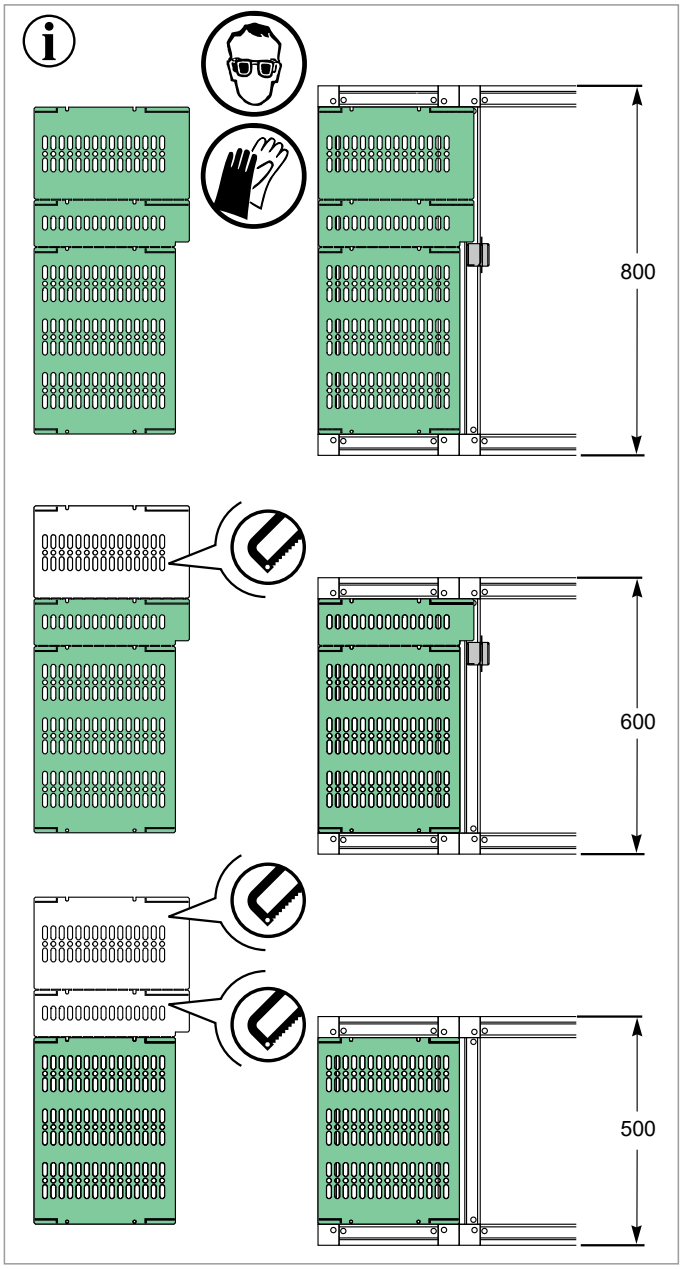

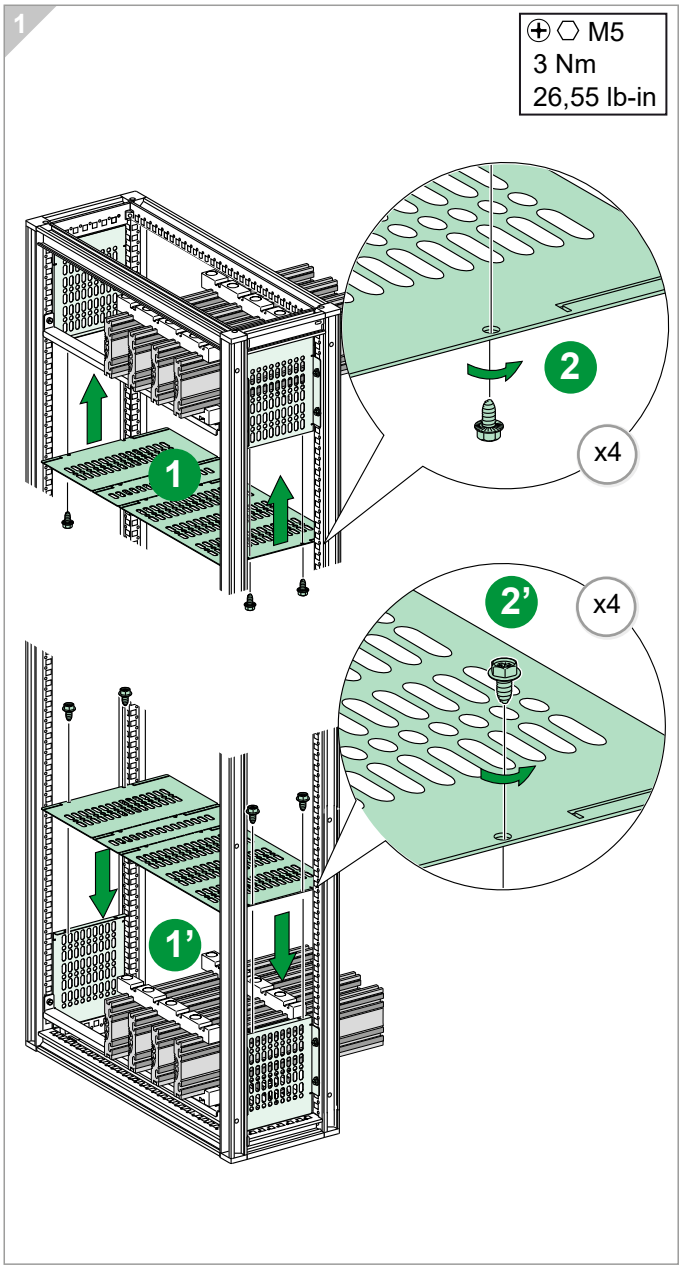

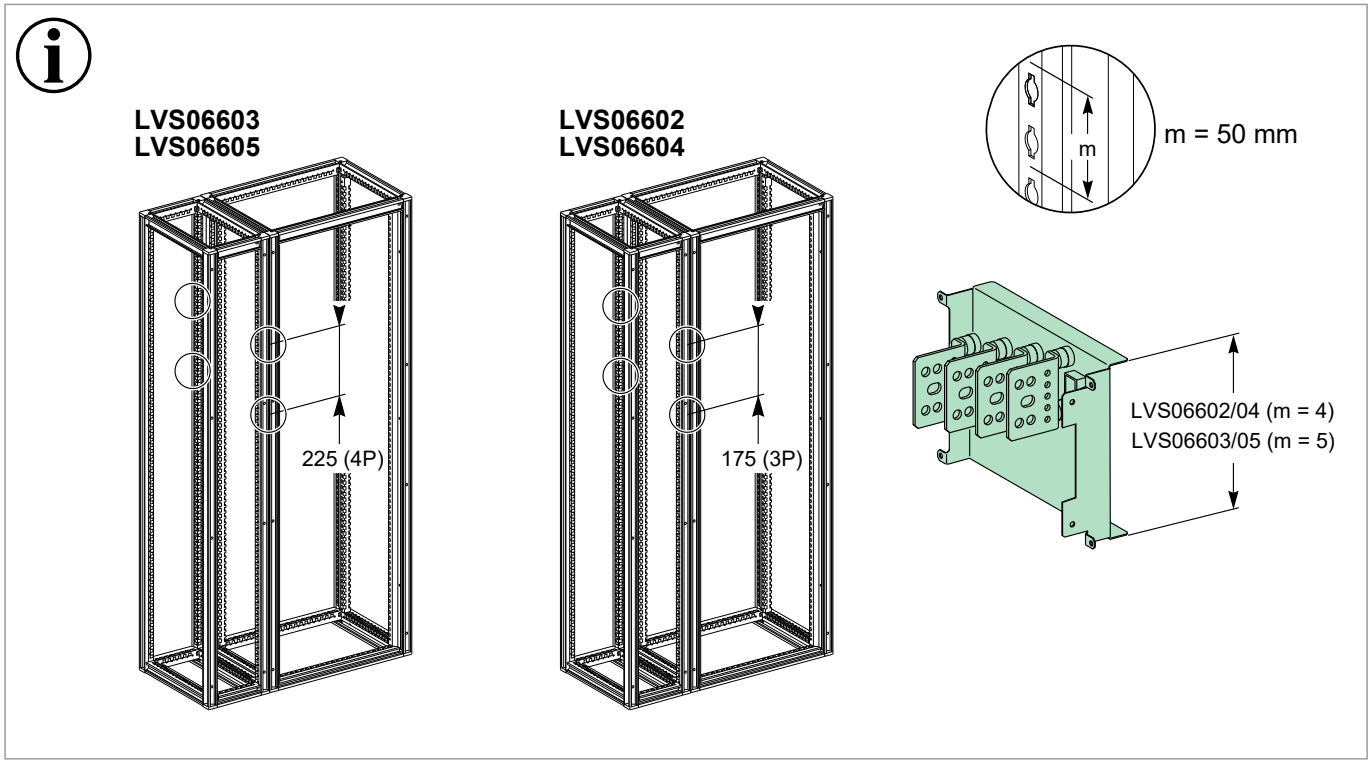
LVS06603
LVS06605
225 (4P)
LVS06602
LVS06604
175 (3P)
m
m = 50 mm
LVS06602/04 (m = 4)
LVS06603/05 (m = 5)

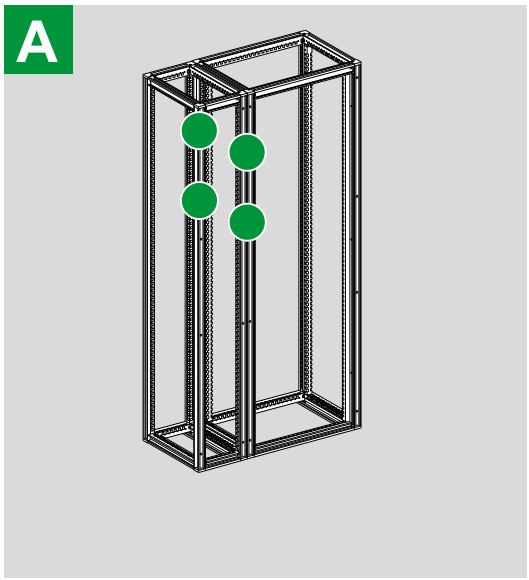
A

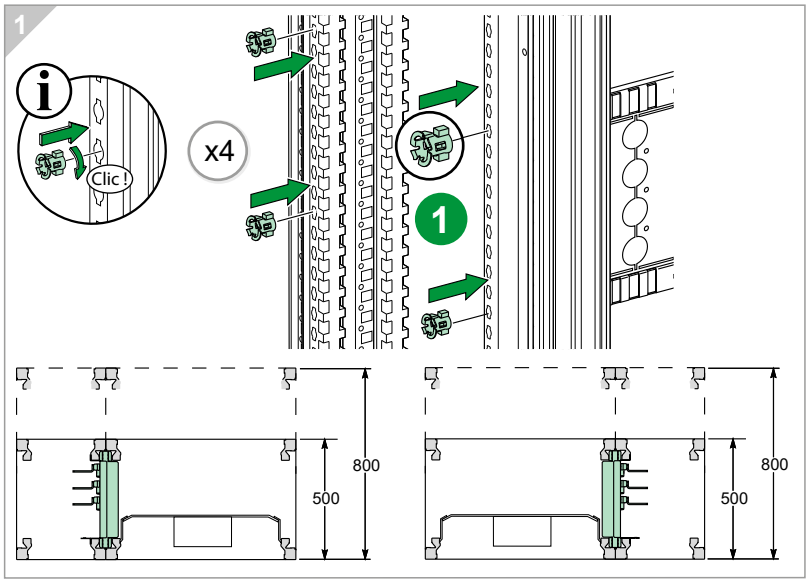
1
Clic !
x4
1
800
500
800
500

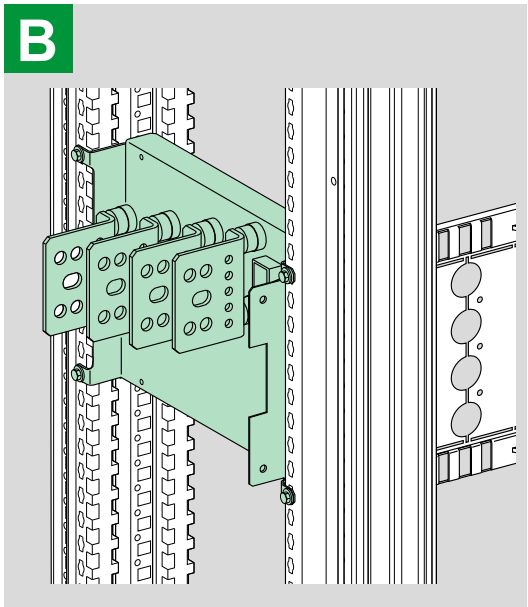
B

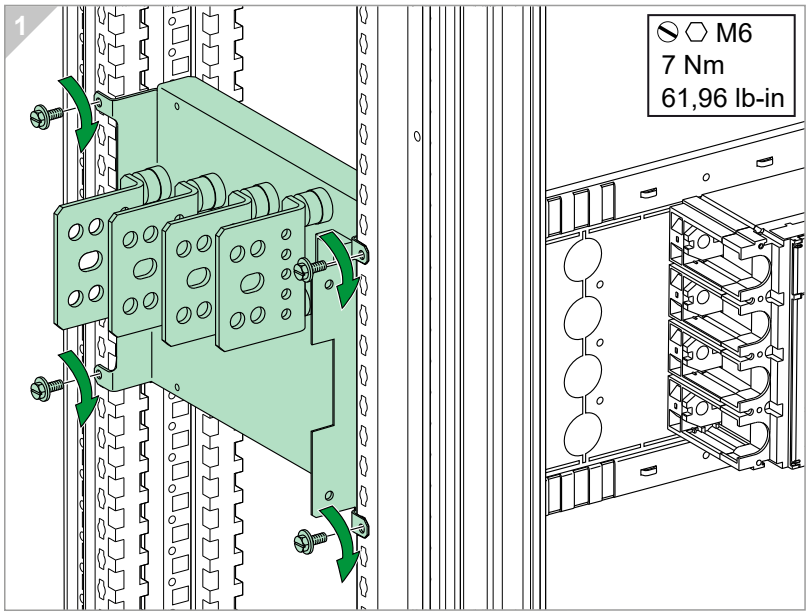
1
M6
7 Nm
61,96 lb-in

C

LVS06602

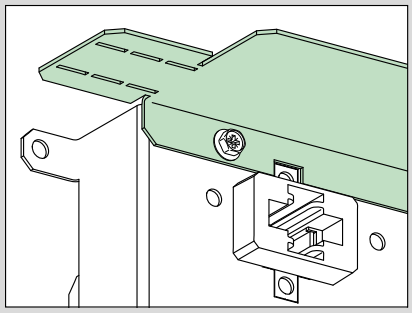

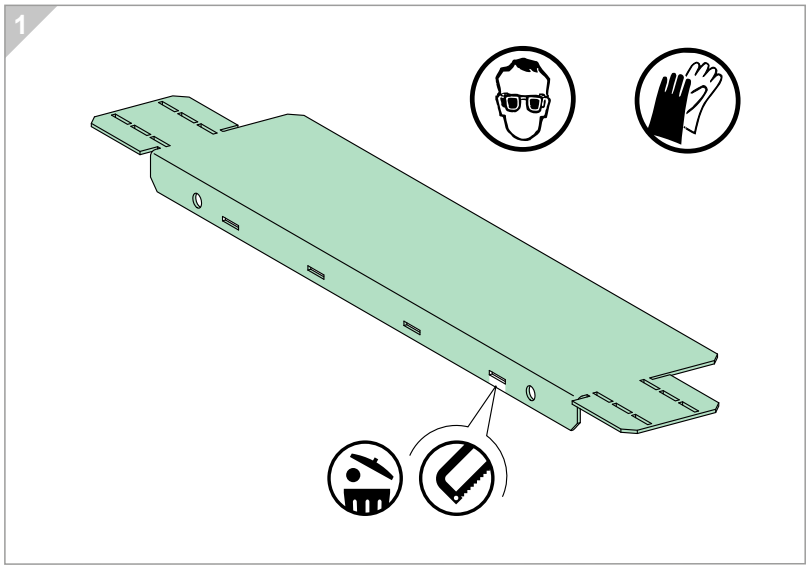

D

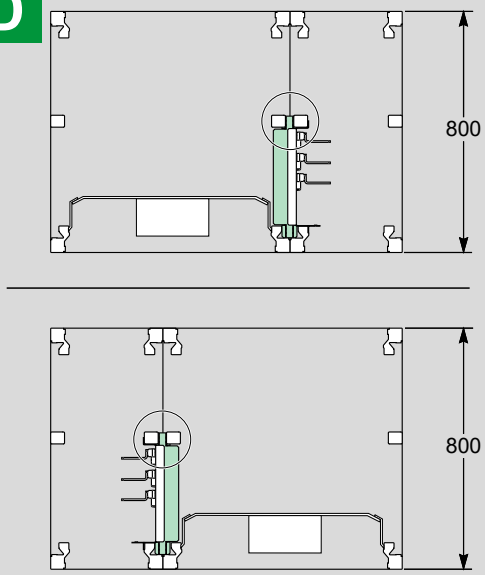

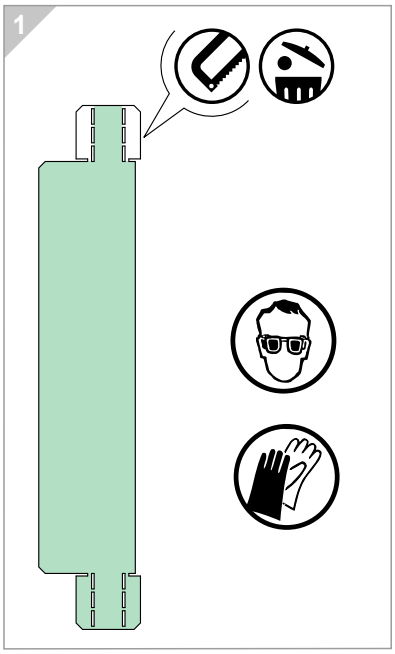

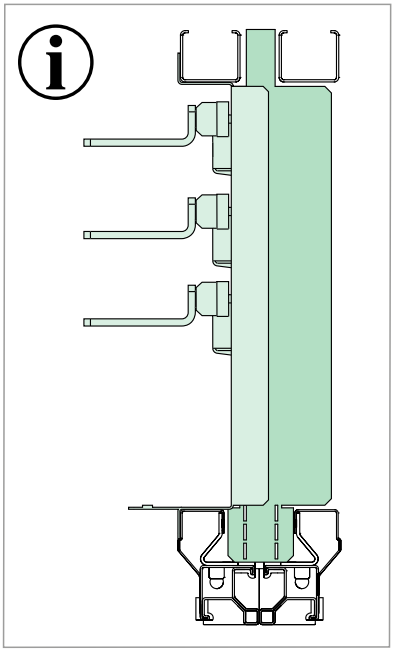

E

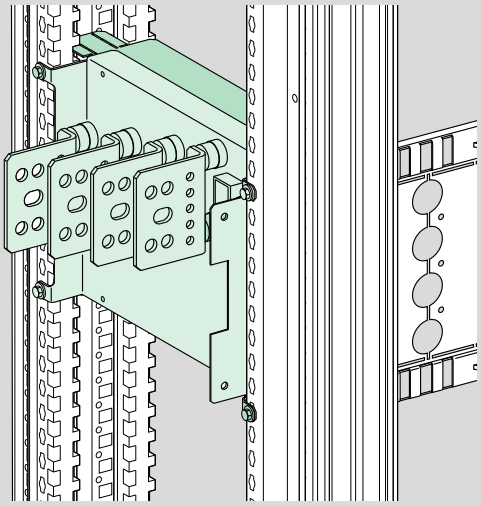

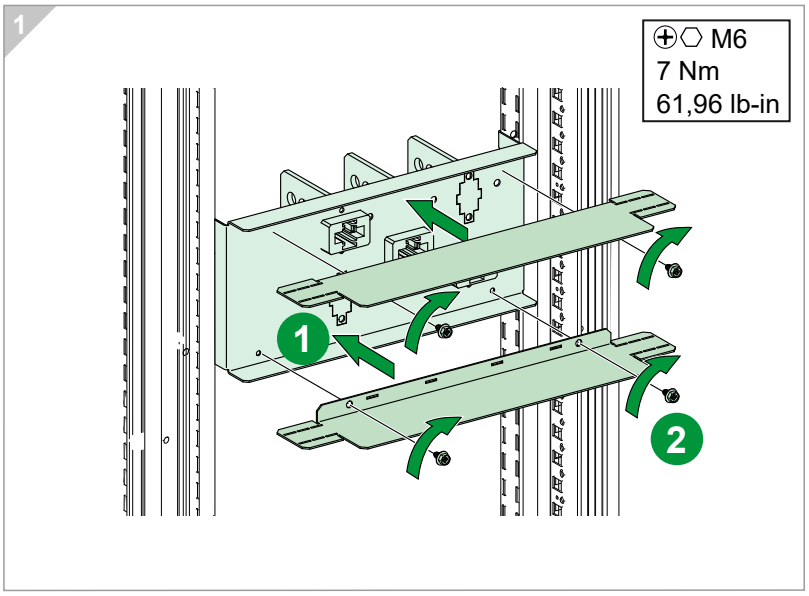

F

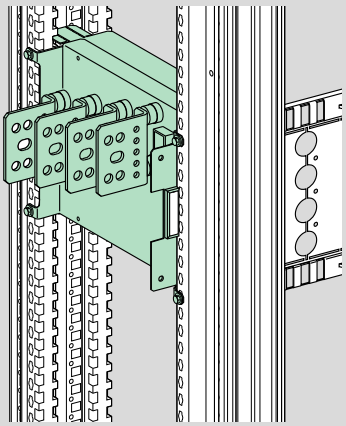

1

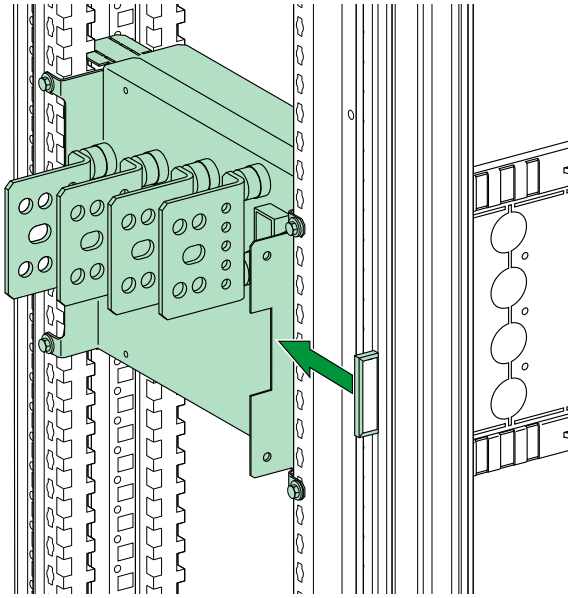

G

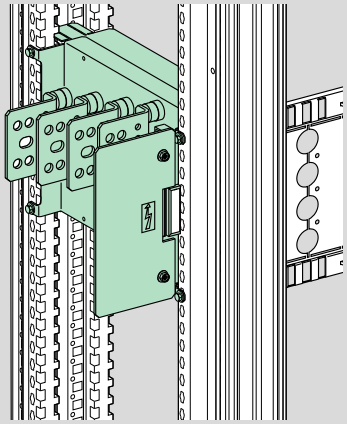

1

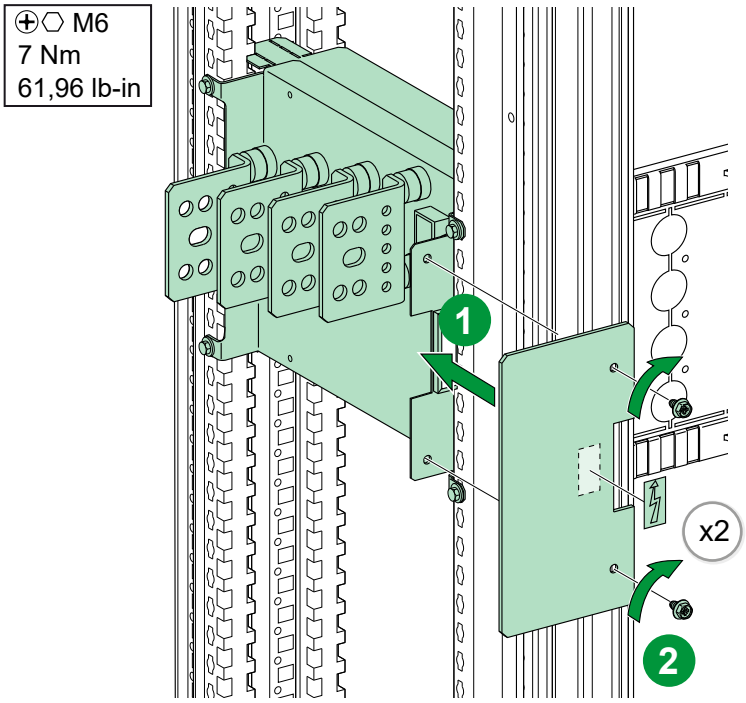

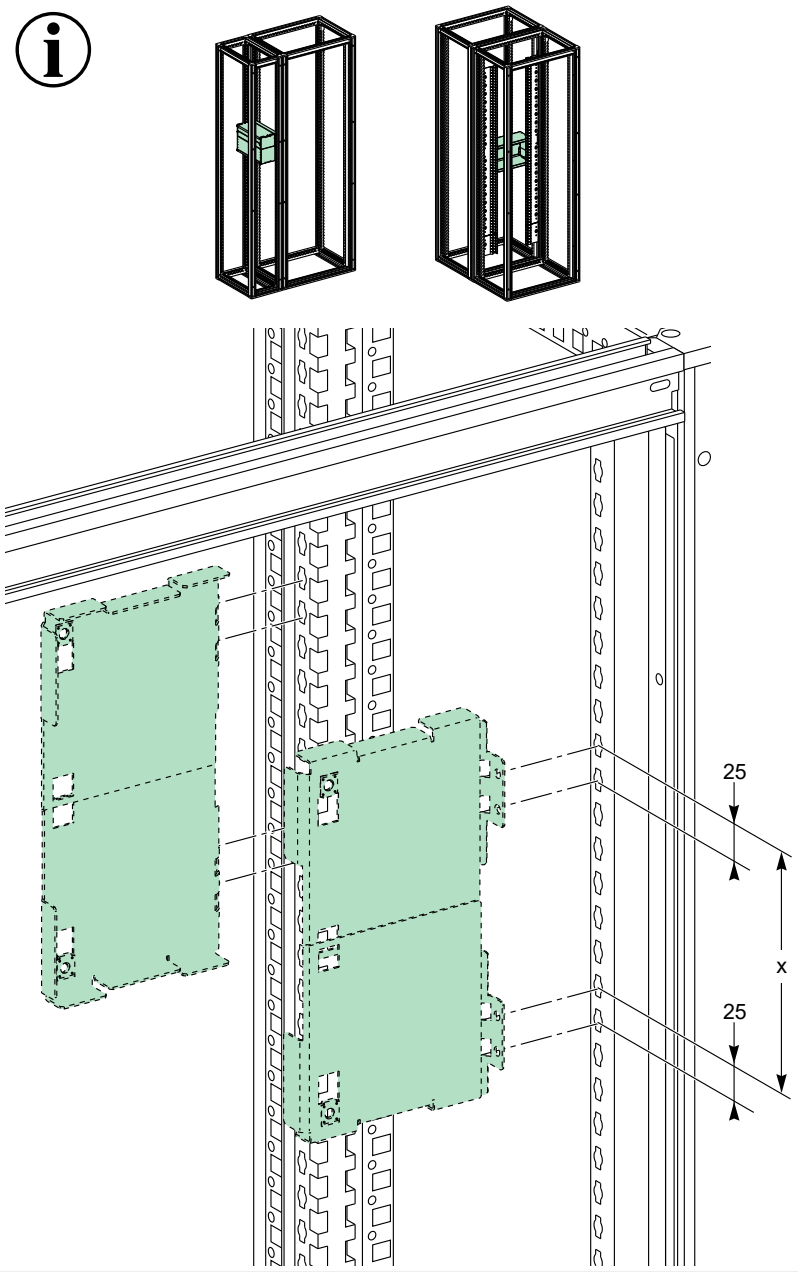

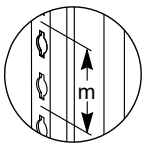

m = 50 mm

	LVS06600 X	LVS06601 X
3 m	50	
4 m	100	75
5 m	150	125
6 m		175

LVS06601

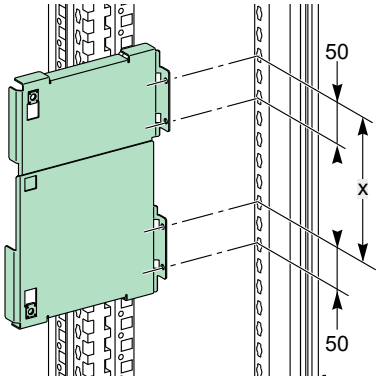

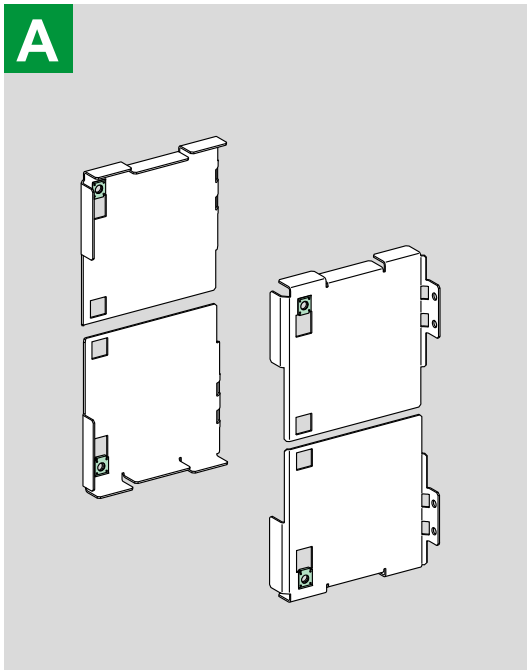

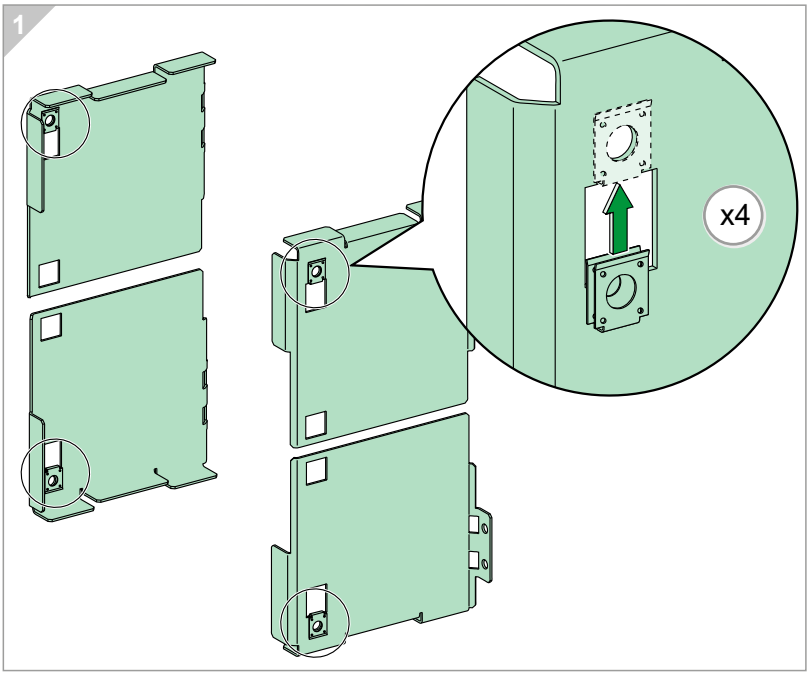

B

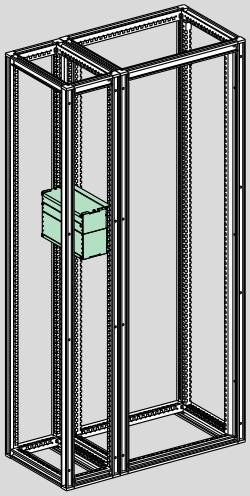

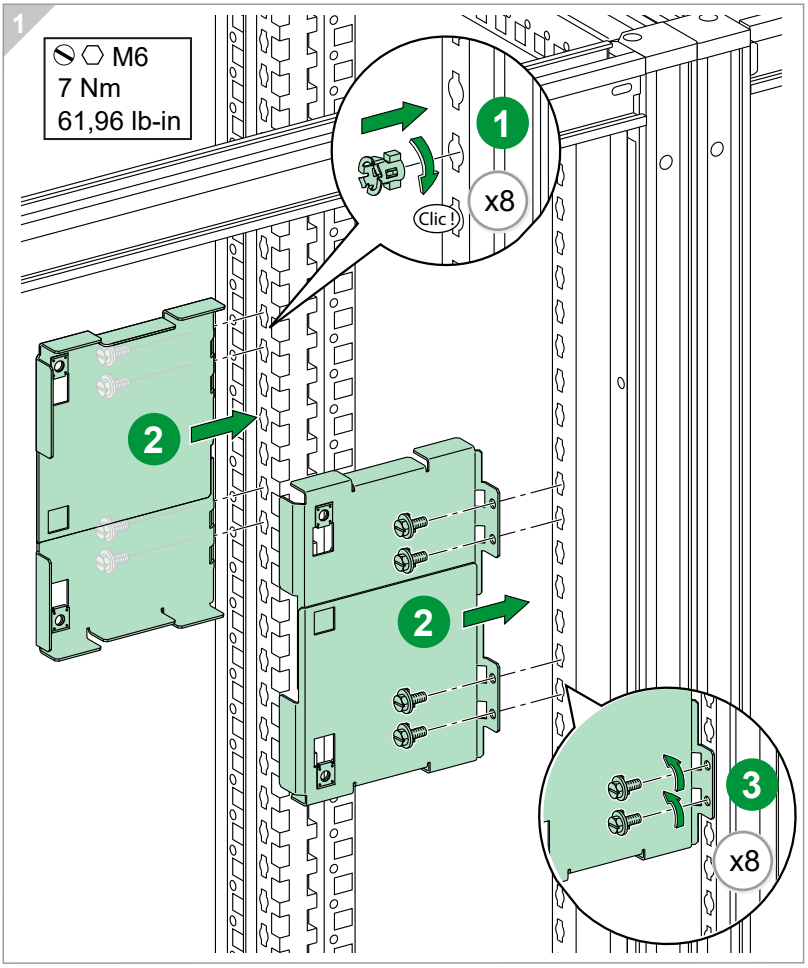
1
M6
7 Nm
61,96 lb-in
1
x8
Clic !
2
2
3
x8

B’

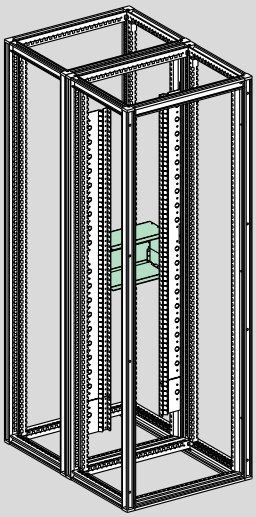

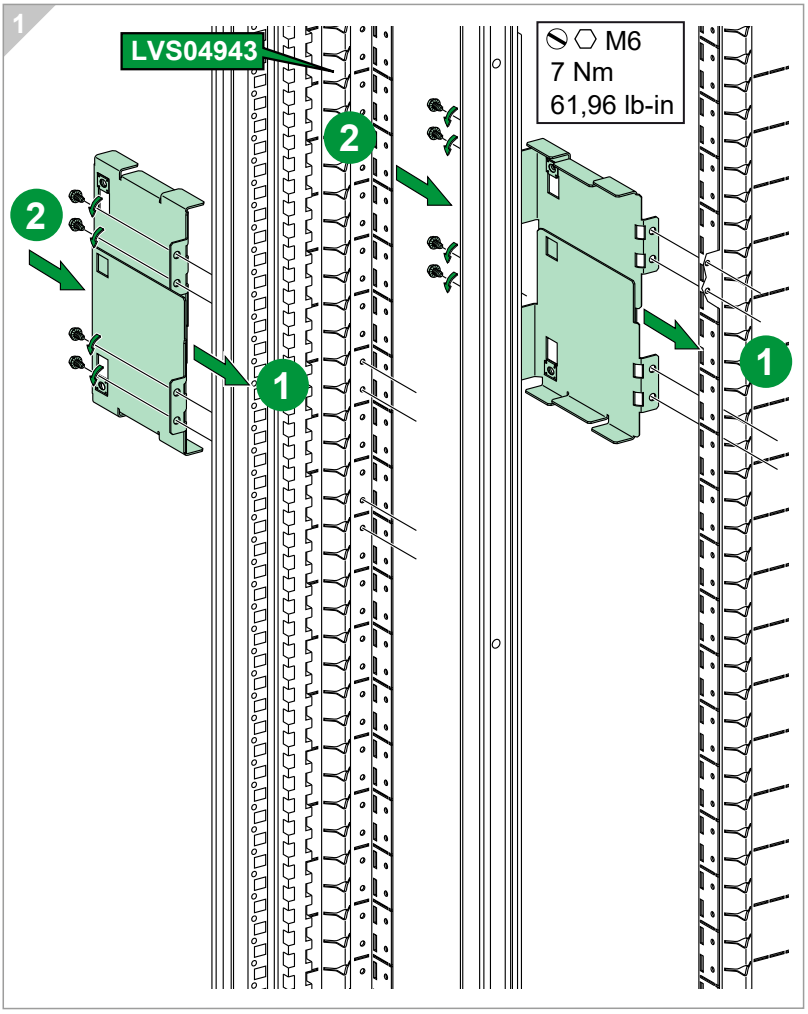
1
LVS04943
M6
7 Nm
61,96 lb-in
2
2
1
1

C

LVS06600

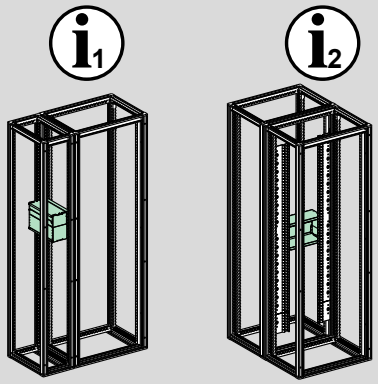

LVS06601

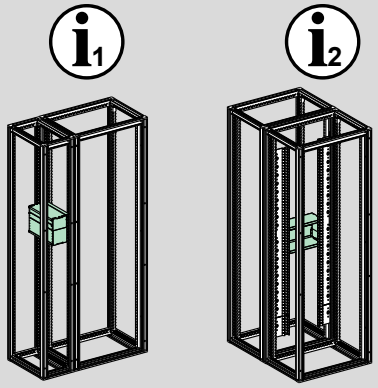

1

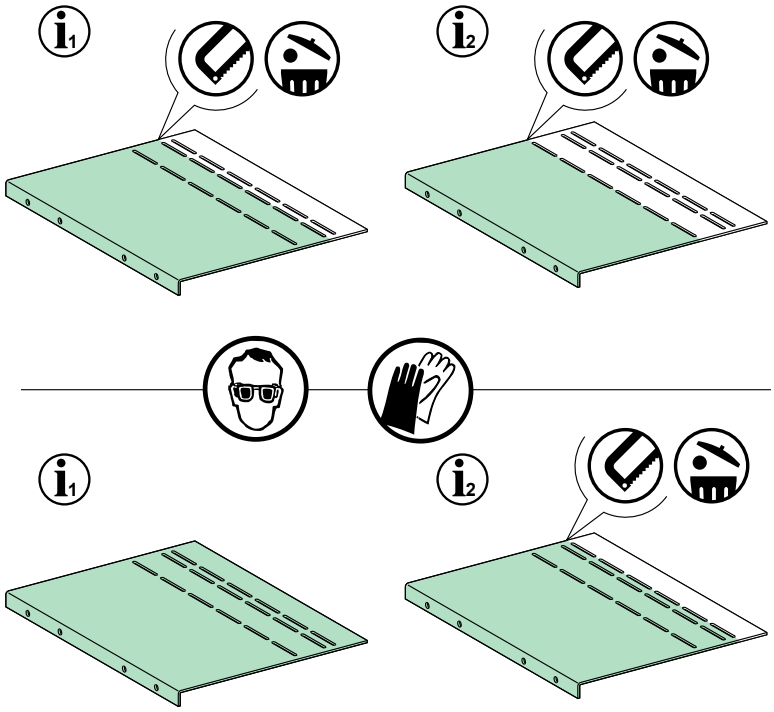

D

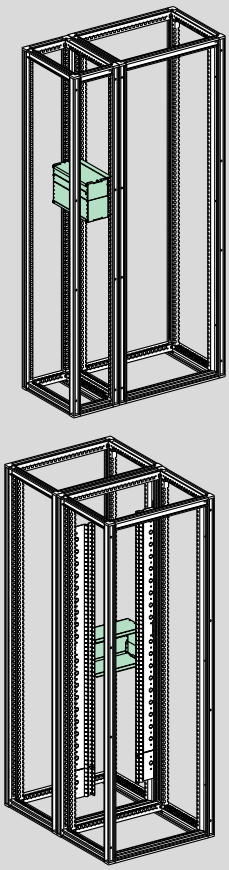

1

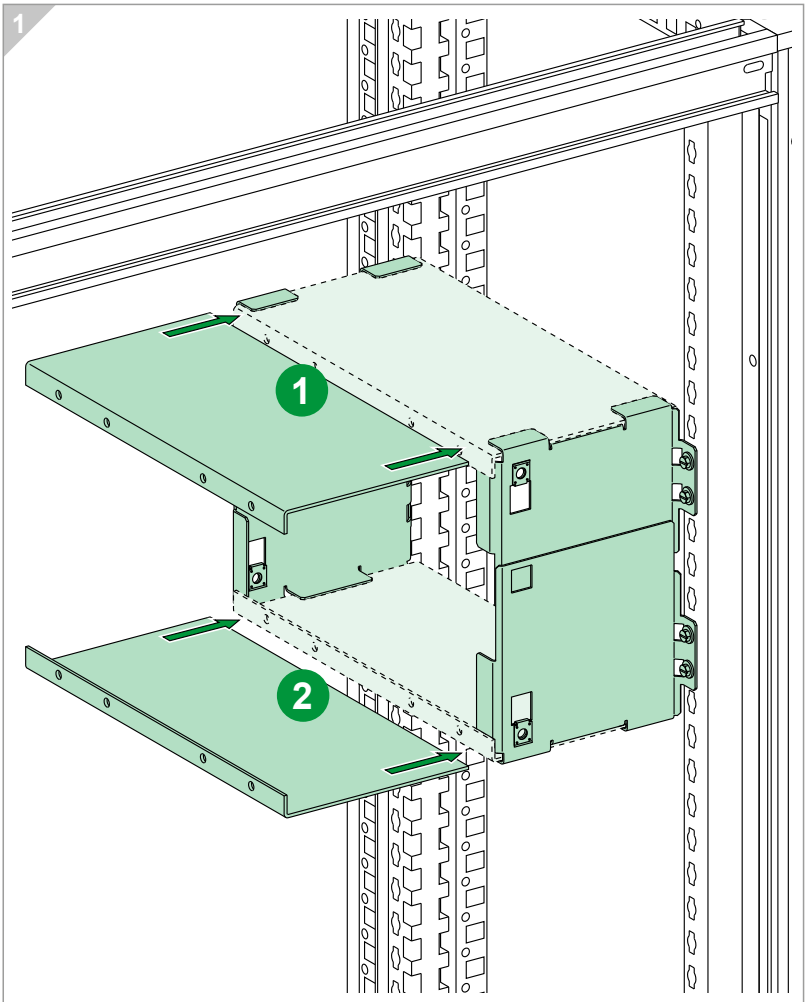

E

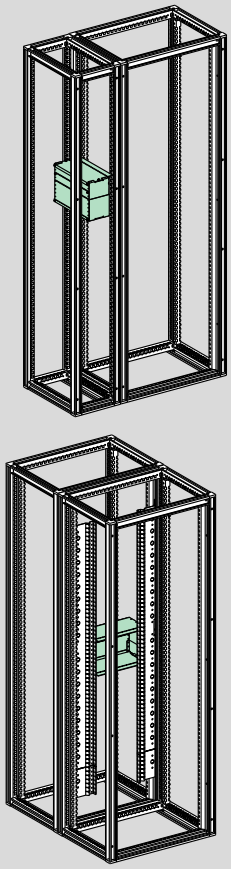

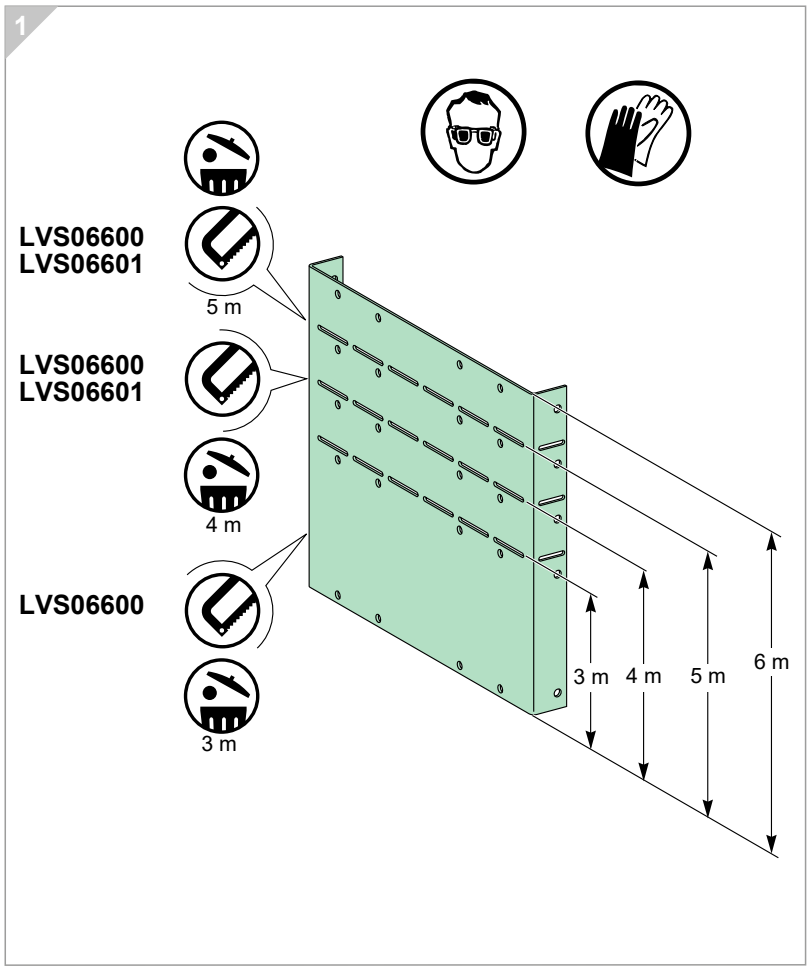
1
LVS06600
LVS06601
5 m
LVS06600
LVS06601
4 m
LVS06600
3 m
3 m
4 m
5 m
6 m

F

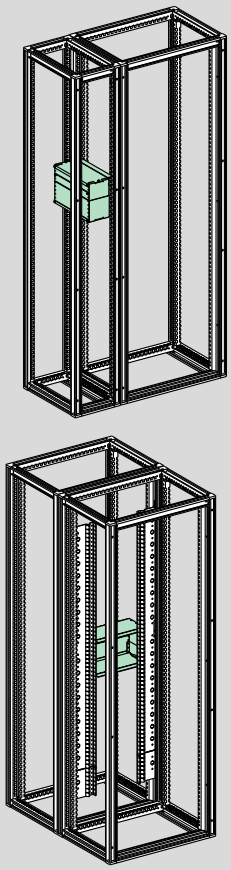

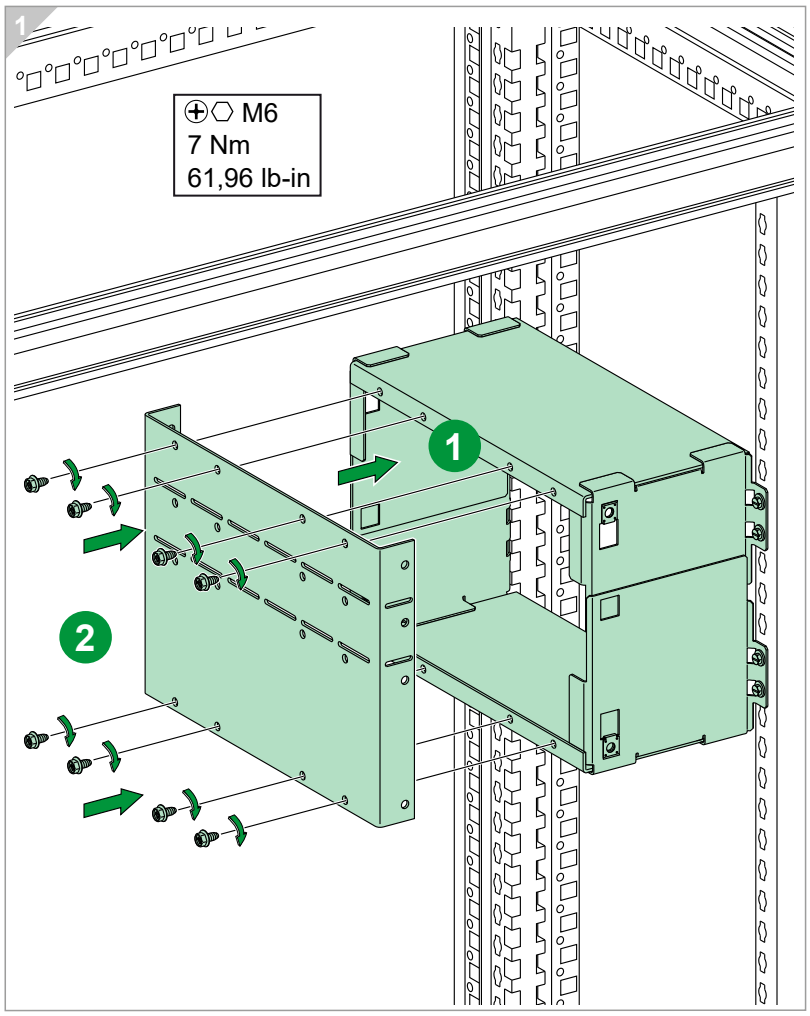
1
M6
7 Nm
61,96 lb-in
1
2

G

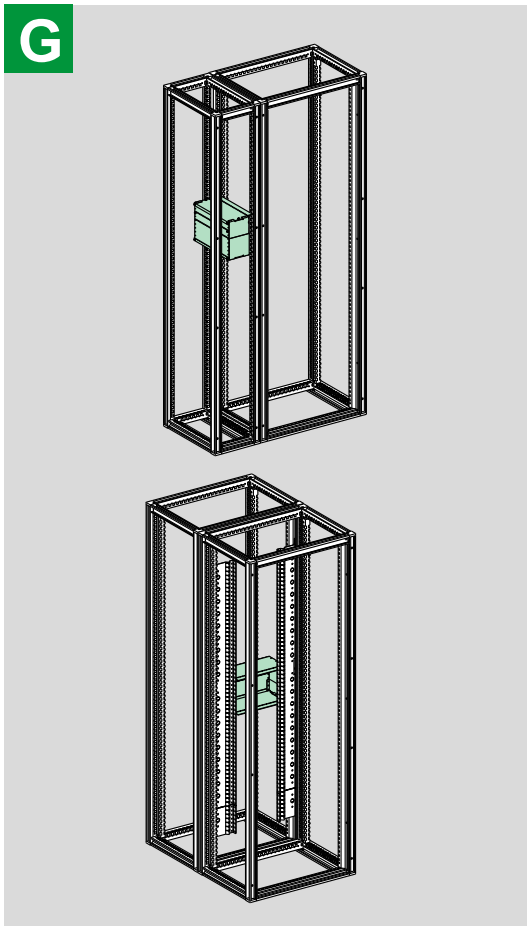

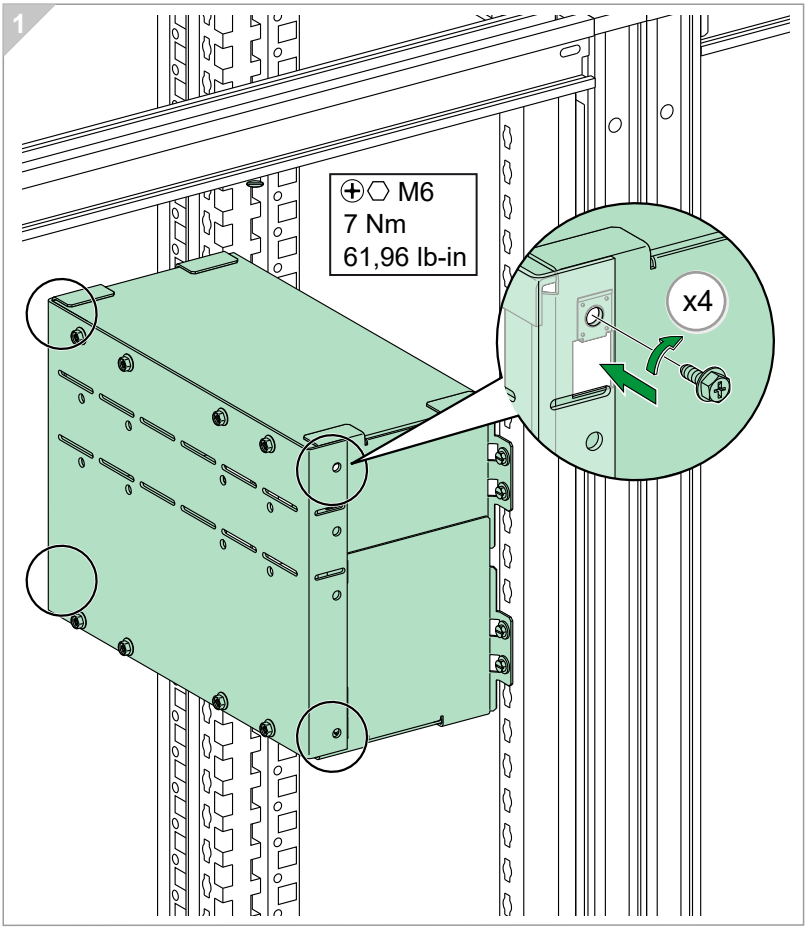

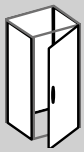

NSY2SP205 NSY2SP205ED
NSY2SP206 NSY2SP208ED
NSY2SP208

A

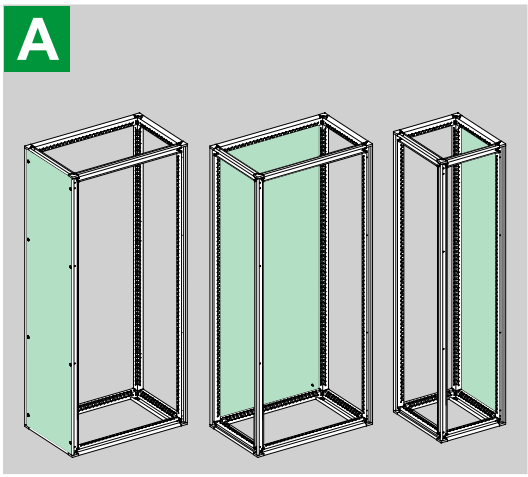

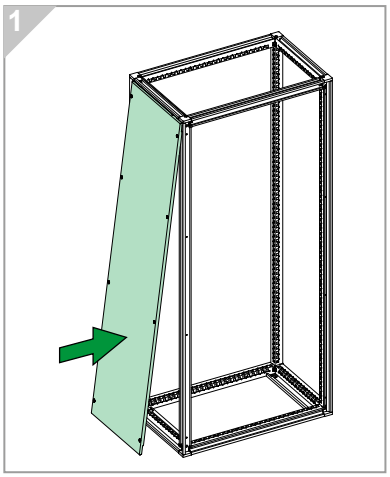

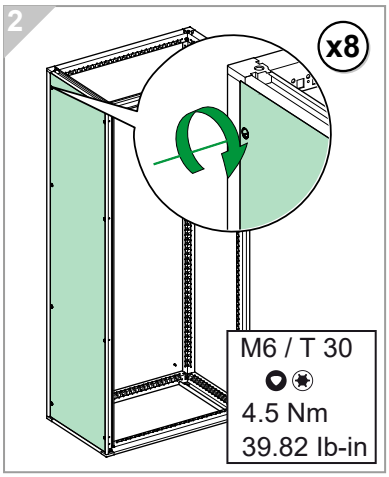

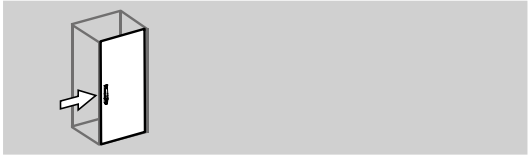

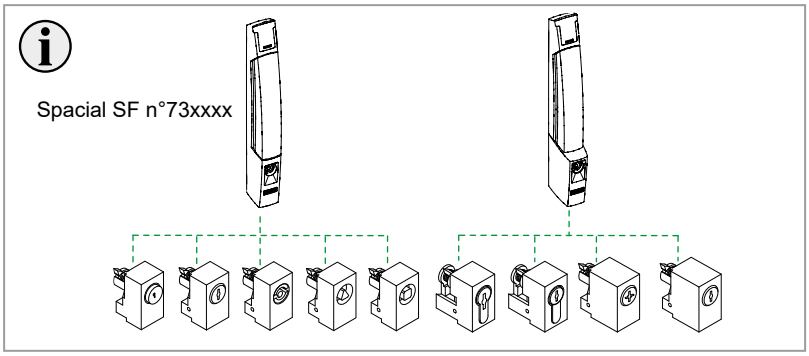

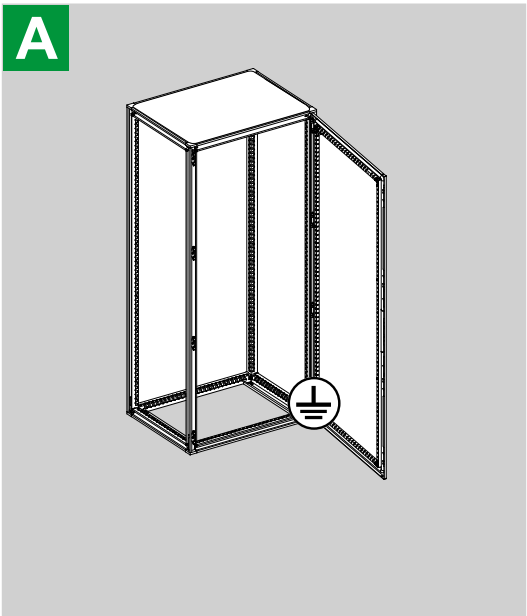
A

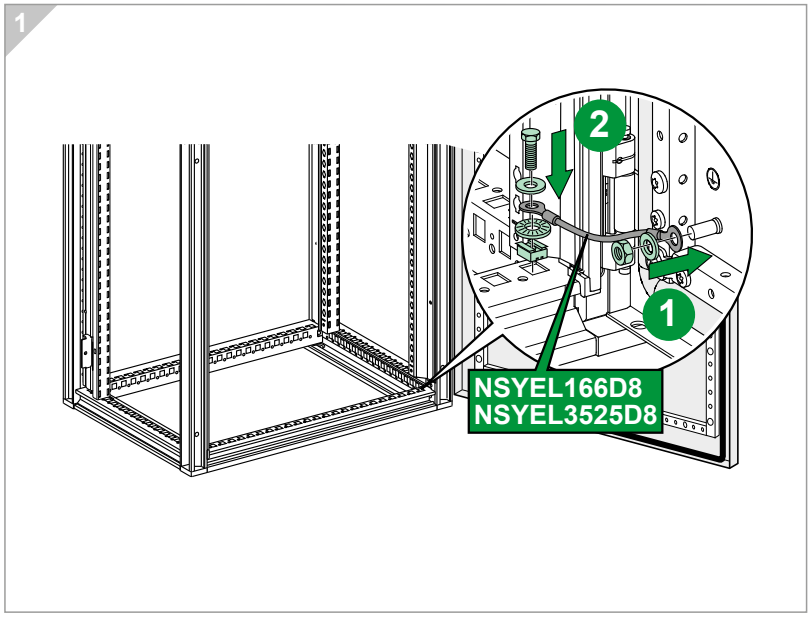
1
2
1
NSYEL166D8
NSYEL3525D8

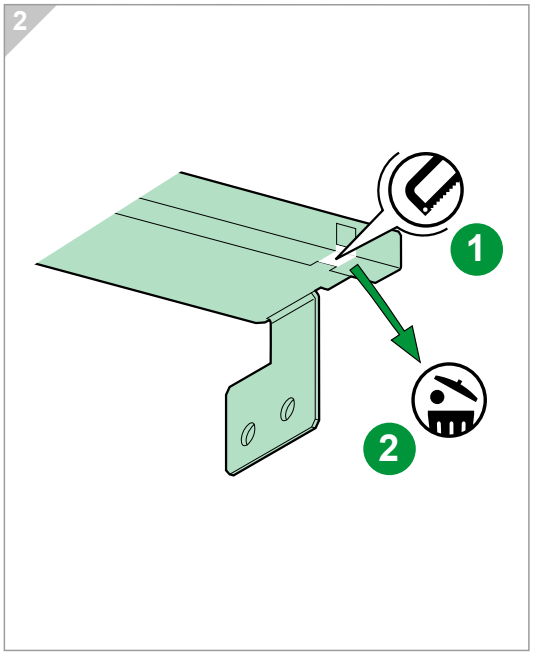
2
1
2

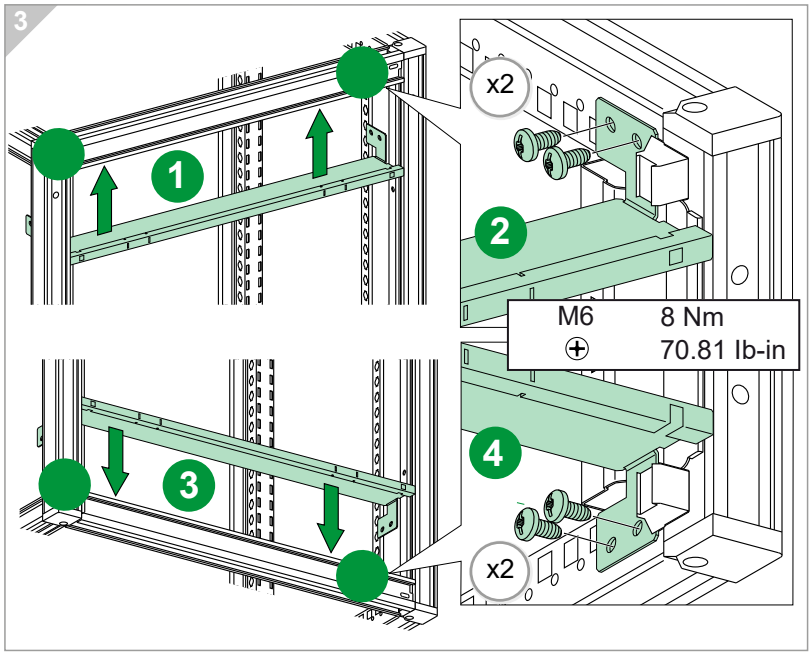
3
x2
1
2
M6 8 Nm
70.81 lb-in
4
3
x2

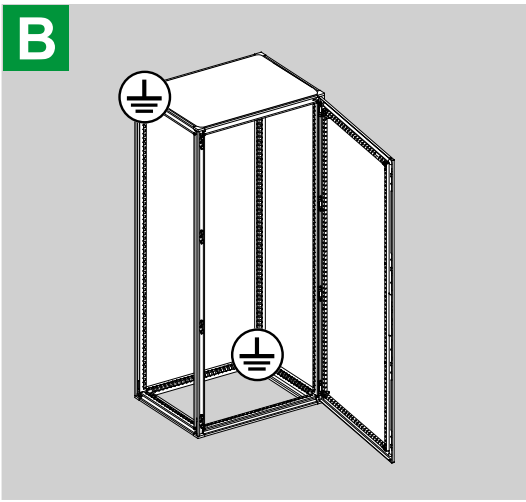
B

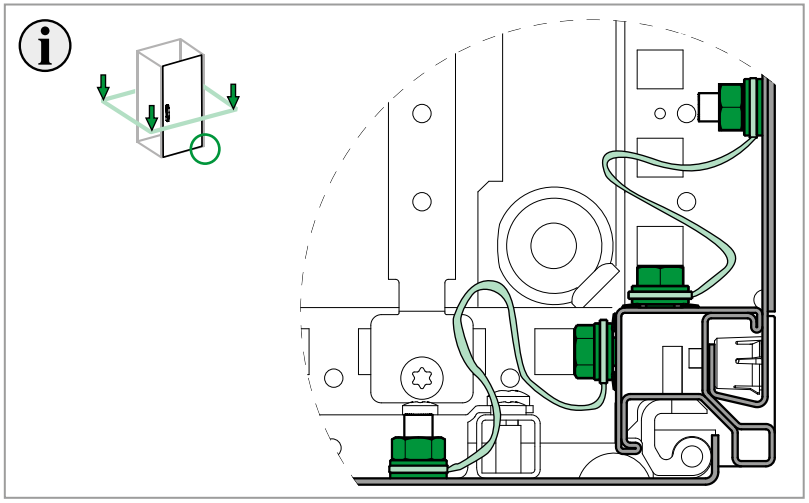

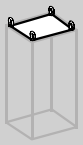

NSYSFEB

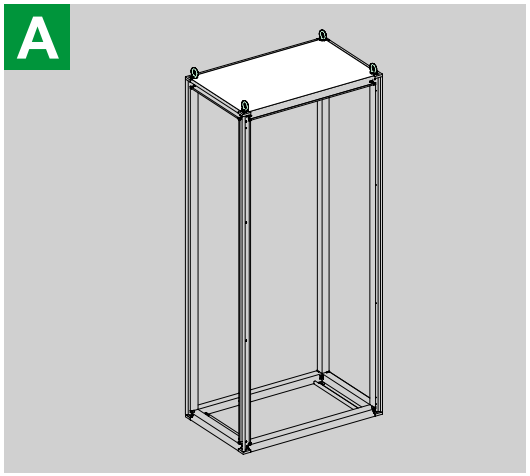

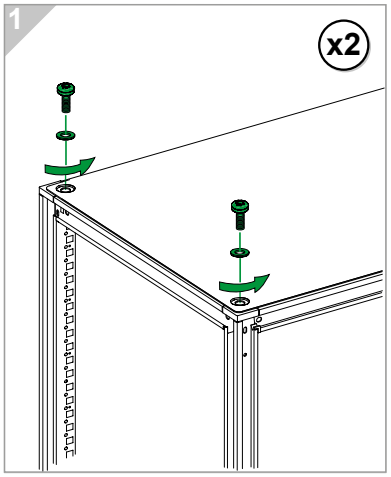

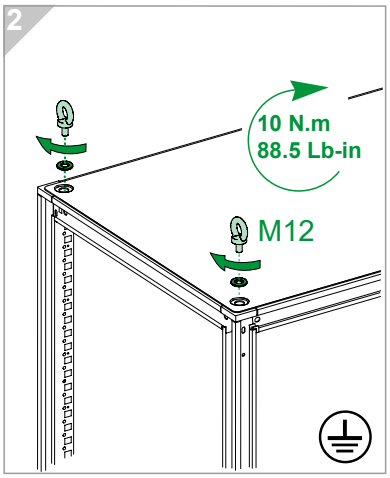

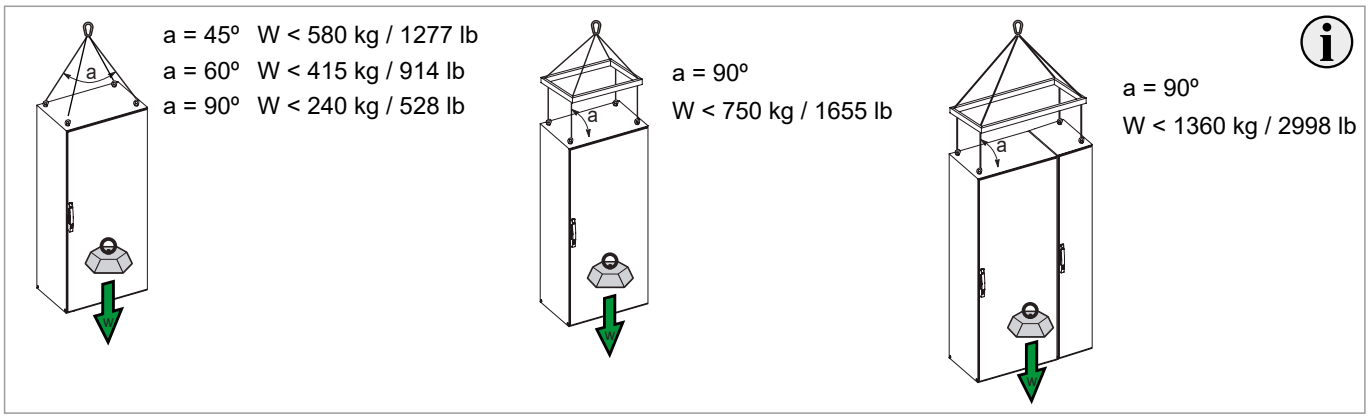

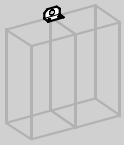

NSYSFELB

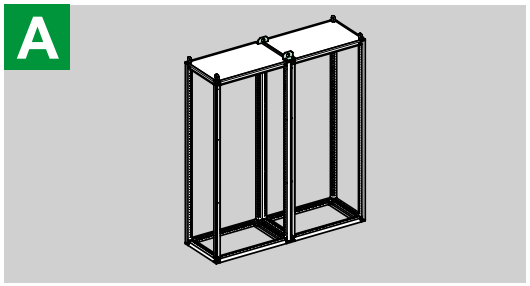

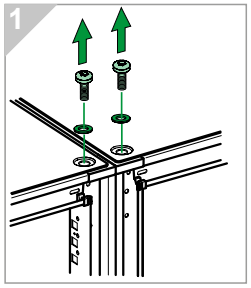

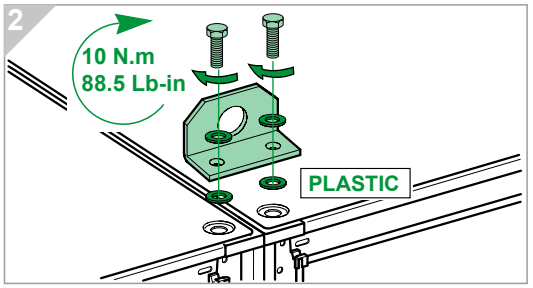

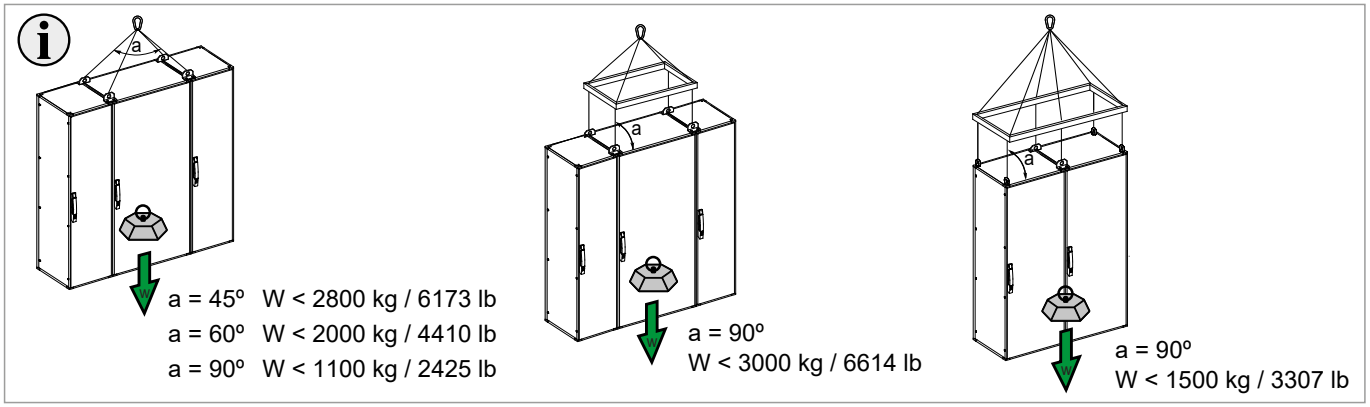

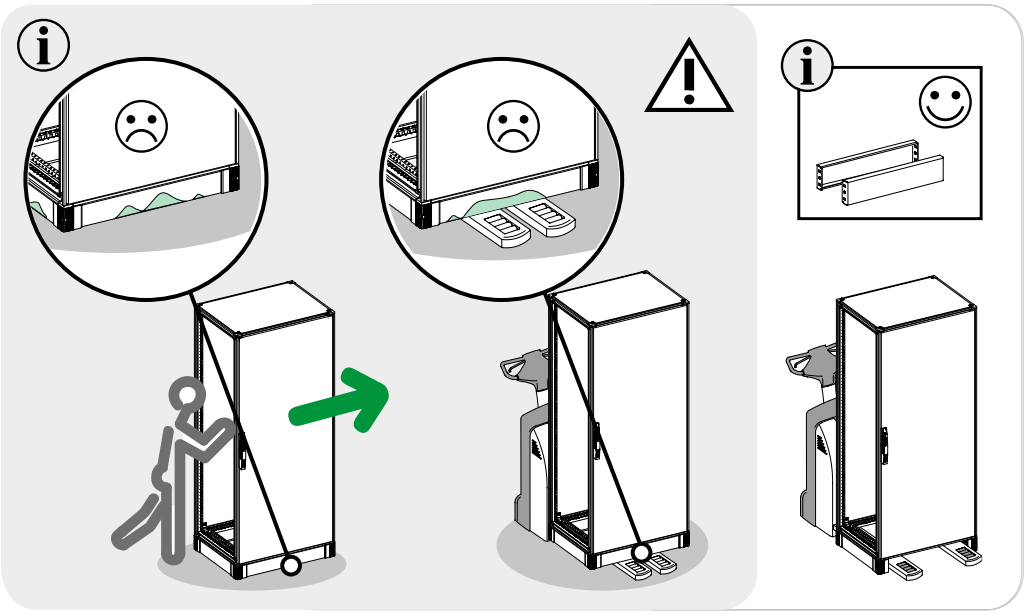

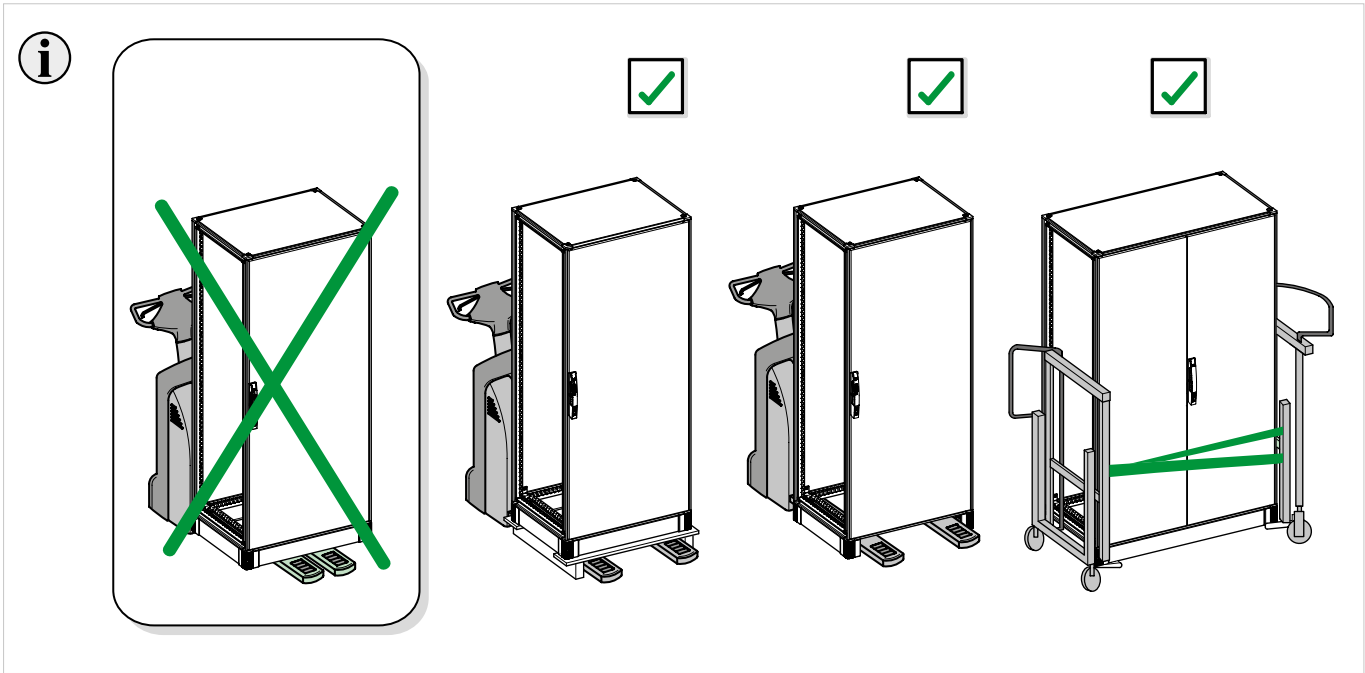

⚠ CAUTION / ATTENTION / ATENCIÓN / VORSICHT / ATTENZIONE / CUIDADO / 小心 / ВНИМАНИЕ	
HAZARD OF EQUIPMENT DAMAGE Respect the information provided in the instruction to ensure the functioning of the product. **Failure to follow these instructions can result in injury or equipment damage.**	**RISQUE DE DETERIORATION DU MATERIEL** Respecter les informations fournies sur la notice pour garantir le fonctionnement du produit. **Si ces directives ne sont pas respectées, cela peut entraîner des blessures ou des dommages matériels.**
RIESGO DE DETERIORO DEL MATERIAL Respetar la información proporcionada en las instrucciones para garantizar el funcionamiento del producto. **El incumplimiento de estas instrucciones puede causar lesiones o daño al equipo.**	**GEFAHR VON MATERIALSCHÄDEN** Beachten Sie die Angaben in der Betriebsanleitung zur Verfügung gestellt, um die Funktionsweise des Produkts zu gewährleisten. **Die Nichtbeachtung dieser Anweisungen kann Verletzungen oder Sachschäden zur Folge haben.**
RISCHIO DI DANNI ALLE APPARECCHIATURE Rispettare le istruzioni fornite per guarantire il funzionamento del prodotto **Il mancato rispetto di queste istruzioni può provocare infortuni o danni alle apparecchiature.**	**RISCO DE DETERIORAÇÃO DO MATERIAL** Respeitar as informações fornecidas no manual de instruções para assegurar o funcionamento do produto. **A não observância destas instruções pode provocar ferimentos pessoais, ou danos no equipamento.**
设备受损风险 为保证正常使用该产品请仔细阅读本产品说明书。 **不遵循上述说明可能导致人身伤害或设备损坏。**	**ОПАСНОСТЬ ПОВРЕЖДЕНИЯ ОБОРУДОВАНИЯ** Следуйте информации, указанной в инструкции, для гарантии правильного функционирования продукта. **Несоблюдение этих инструкций может привести к травме или повреждению оборудования.**

Schneider Electric Industries SAS
35, rue Joseph Monier
92500 Rueil-Malmaison
France

www.se.com

En raison de l'évolution des normes et du matériel, les caractéristiques indiquées par le texte et les images de ce document ne nous engagent qu'après confirmation par nos services.

As standards, specifications and designs change from time to time, please ask for confirmation of the information given in this publication.

Publication : Schneider Electric
Réalisation : Schneider Electric
Impression :

JYT7854201-00

Ce document a été imprimé sur du papier écologique.

This document has been printed on ecological paper.