Product data sheet

Specifications

Motor circuit breaker, TeSys GV4, 3P, 80A, Icu 50kA, thermal magnetic multifunction, Everlink terminals

GV4PEM80N

Main

Range of product	TeSys GV4
Range	TeSys Deca
Device short name	GV4PEM
Product name	TeSys GV4
Product or component type	Motor circuit breaker
Device application	Motor protection
Trip unit technology	Thermal-magnetic Electronic

Complementary

Poles description	3P
Utilisation category	Category A conforming to IEC 60947-2 AC-3 conforming to IEC 60947-4-1
Operating position	Any position
Motor power kW	37 kW at 400...415 V AC 50/60 Hz 45 kW at 500 V AC 50/60 Hz 22 kW at 400...415 V AC 50/60 Hz 30 kW at 500 V AC 50/60 Hz 37 kW at 660...690 V AC 50/60 Hz 45 kW at 660...690 V AC 50/60 Hz 55 kW at 660...690 V AC 50/60 Hz 30 kW at 400...415 V AC 50/60 Hz 37 kW at 500 V AC 50/60 Hz
Breaking capacity	100 kA Icu at 220...240 V AC 50/60 Hz conforming to IEC 60947-2 50 kA Icu at 380...415 V AC 50/60 Hz conforming to IEC 60947-2 50 kA Icu at 440 V AC 50/60 Hz conforming to IEC 60947-2 15 kA Icu at 525 V AC 50/60 Hz conforming to IEC 60947-2 65 kA at 208Y/120 V AC 50/60 Hz conforming to UL 60947 65 kA at 240 V AC 50/60 Hz conforming to UL 60947 35 kA at 480Y/277 V AC 50/60 Hz conforming to UL 60947 8 kA Icu at 660...690 V AC 50/60 Hz conforming to IEC 60947-2 25 kA Icu at 500 V AC 50/60 Hz conforming to IEC 60947-2 18 kA at 600Y/347 V AC 50/60 Hz conforming to UL 60947
control type	Toggle
[In] rated current	80 A
Magnetic tripping current	1360 A
[Ue] rated operational voltage	690 V AC 50/60 Hz conforming to IEC 60947-2
[Ui] rated insulation voltage	800 V AC 50/60 Hz conforming to IEC 60947-2
[Ith] conventional free air thermal current	115 A conforming to IEC 60947-4-1
[Uimp] rated impulse withstand voltage	8 kV conforming to IEC 60947-2

Disclaimer: This documentation is not intended as a substitute for and is not to be used for determining suitability or reliability of these products for specific user applications

Power dissipation per pole	4.6 W
Mechanical durability	40000 cycles
Electrical durability	14000 cycles for AC-3 at 440 V In/2 7000 cycles for AC-3 at 440 V In
Maximum operating rate	25 cyc/h
Rated duty	Continuous conforming to IEC 60947-4-1
Connections - terminals	EverLink BTR screw connectors (top) 1 cable(s) 1.5…70 mm² - solid EverLink BTR screw connectors (top) 1 cable(s) 1.5…50 mm² - flexible EverLink BTR screw connectors (bottom) 1 cable(s) 2.5…95 mm² - solid EverLink BTR screw connectors (bottom) 1 cable(s) 2.5…70 mm² - flexible
Tightening torque	9 N.m for cable 16…95 mm² 5 N.m for cable 1.5…10 mm²
Mechanical robustness	Vibrations: +/- 1 mm 2...13.2 Hz conforming to IEC 60068-2-6 Vibrations: 0.7 gn 13.2...100 Hz conforming to IEC 60068-2-6 Shocks: 15 gn 11 ms conforming to IEC 60068-2-27
Phase failure sensitivity	Yes conforming to IEC 60947-4-1
Height	155 mm
Width	81 mm
Depth	116 mm
Net weight	1.45 kg
Colour	Grey (RAL 7016)
Suitability for isolation	Yes conforming to IEC 60947-1

Environment

Standards	CSA C22.2 No 60947-4-1 UL 60947-4-1 EN/IEC 60947-4-1 EN/IEC 60947-2
Product certifications	IEC UL CSA CCC EAC ATEX EU-RO MR
Climatic withstand	conforming to IACS E10
IK degree of protection	IK07 conforming to IEC 62262
Pollution degree	3
IP degree of protection	IP40 conforming to IEC 60529
Ambient air temperature for storage	-50…85 °C
Fire resistance	960 °C conforming to IEC 60695-2-11
Operating altitude	5000 m
Ambient air temperature for operation	-25…70 °C

Packing Units

Unit Type of Package 1	PCE
Number of Units in Package 1	1
Package 1 Height	17.0 cm
Package 1 Width	11.0 cm

Package 1 Length	22.0 cm
Package 1 Weight	1.67 kg
Unit Type of Package 2	S03
Number of Units in Package 2	5
Package 2 Height	30 cm
Package 2 Width	30 cm
Package 2 Length	40 cm
Package 2 Weight	9 kg

Contractual warranty

Warranty	18 months

Environmental Data

Schneider Electric aims to achieve Net Zero status by 2050 through supply chain partnerships, lower impact materials, and circularity via our ongoing “Use Better, Use Longer, Use Again” campaign to extend product lifetimes and recyclability.

Environmental Data explained >

How we assess product sustainability >

Environmental footprint

Total lifecycle Carbon footprint	**90**
Environmental Disclosure	**Product Environmental Profile**

Use Better

Materials and Substances

Packaging made with recycled cardboard	**Yes**
Packaging without single use plastic	**Yes**
EU RoHS Directive	**Compliant with Exemptions**
SCIP Number	**1b259a2c-3a3c-401a-acdd-f0837efd4018**
REACh Regulation	**REACh Declaration**
Halogen-free status	**Halogen free plastic parts product**
PVC free	**Yes**

Use Again

Repack and remanufacture

End of life manual availability	**End of Life Information**
Take-back	**No**
WEEE Label	**The product must be disposed on European Union markets following specific waste collection and never end up in rubbish bins**

Performance Curves

Thermal-Magnetic Tripping Curves for GV4P, GV4PE, GV4PEM

Average Operating Times at 20 °C Related to Multiples of the Setting Current

Hot state

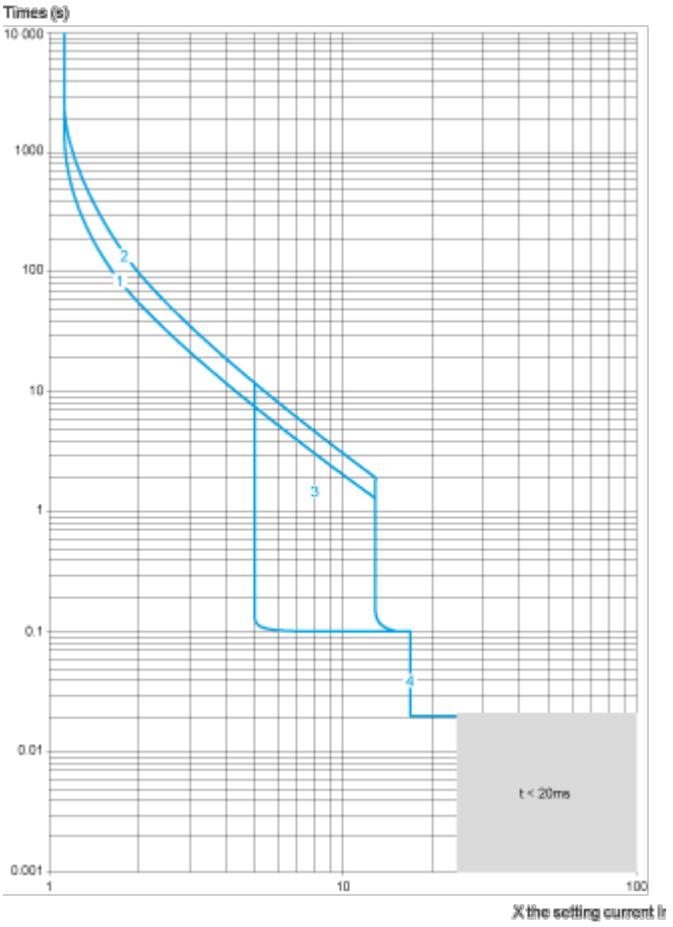

1 Class 10

2 Class 20

3 Isd = 5...13x Ir

4 Ii = 17 In

Cold state

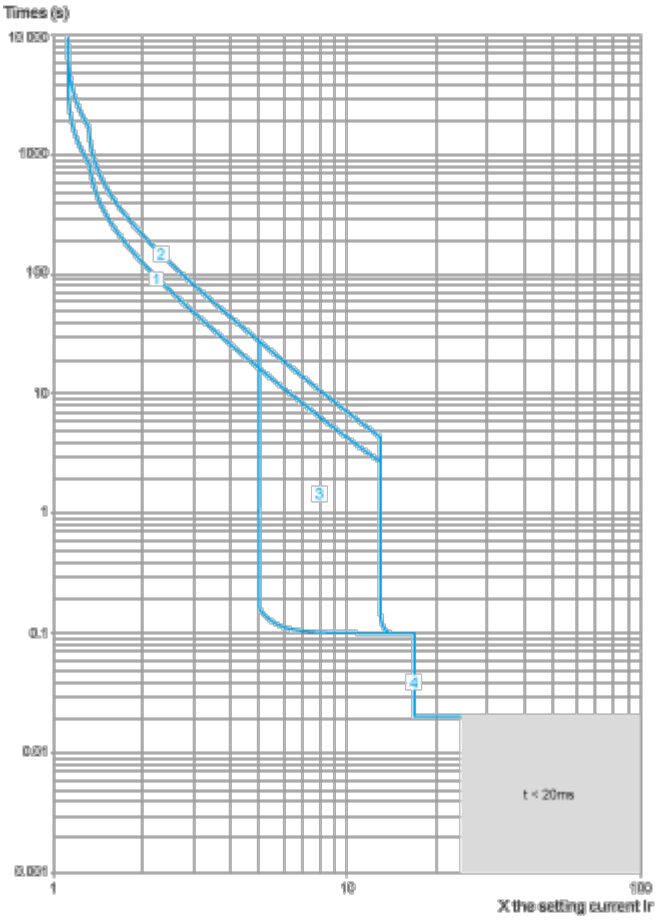

1 Class 10

2 Class 20

3 Isd = 5...13x Ir

4 Ii = 17 In

Current Limitation on Short-Circuit for GV4P, GV4PE, GV4PEM (3-Phase 400/415 V)

Dynamic Stress

I peak = f (prospective Isc) at 1.05 Ue = 435 V

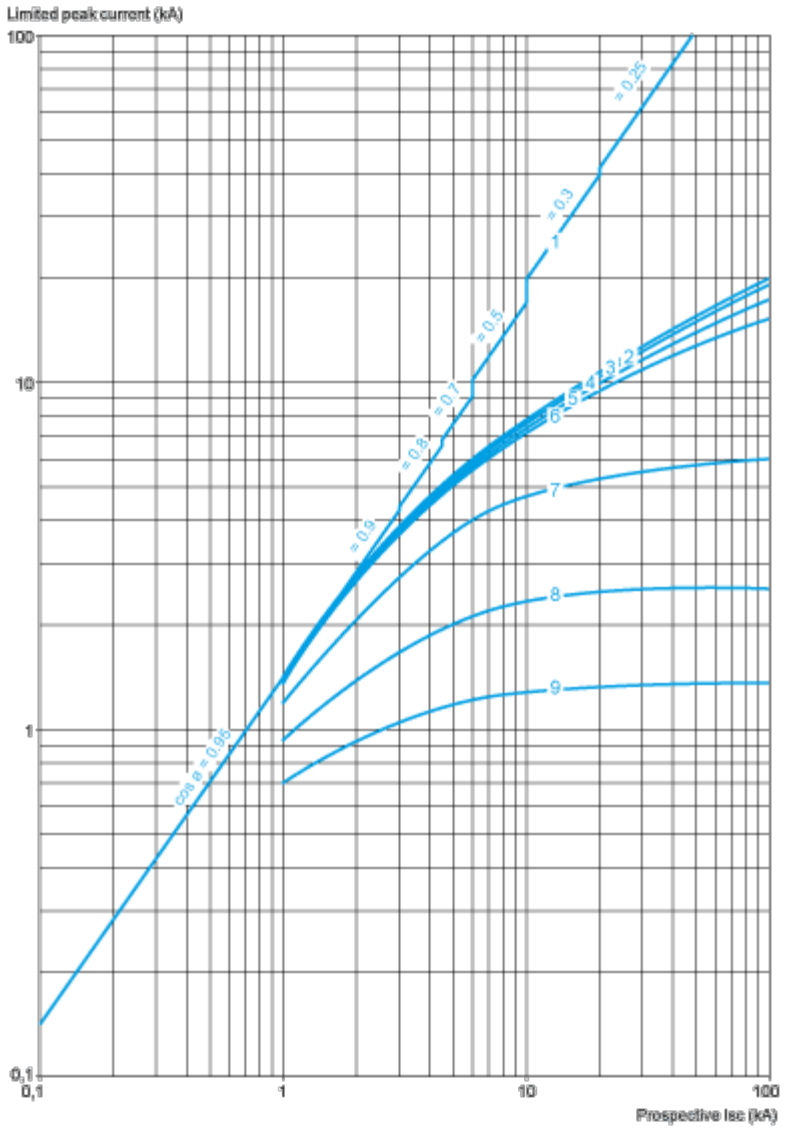

1 Maximum peak current

2 GV4P115

3 GV4P80

4 GV4P50

5 GV4P25

6 GV4P12

7 GV4P07

8 GV4P03

9 GV4P02

Thermal Limit on Short-Circuit for GV4P, GV4PE, GV4PEM

Thermal Limit in $kA^2$2s in the Magnetic Operating Zone

Sum of I^2dt = f (prospective Isc) at 1.05 Ue = 435 V

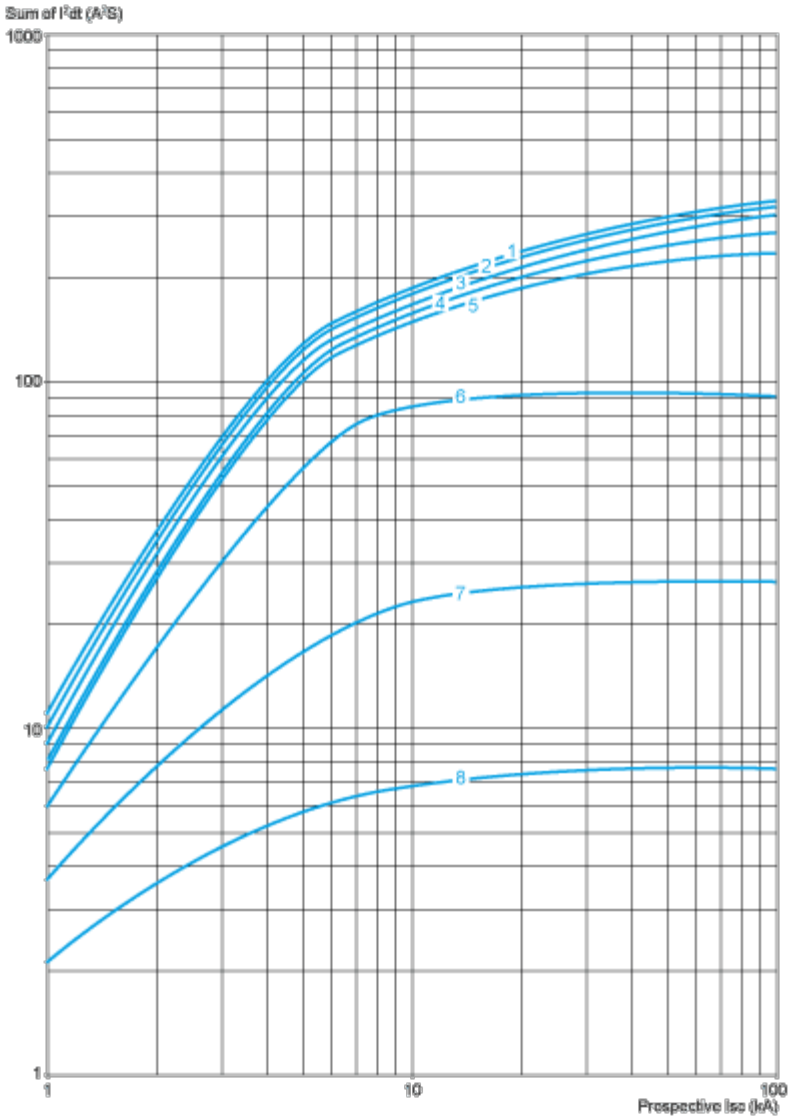

1 GV4P115

2 GV4P80

3 GV4P50

4 GV4P25

5 GV4P12

6 GV4P07

7 GV4P03

8 GV4P02

Dimensions Drawings

GV4 with Toggle: GV4LE, GV4PE, GV4PEM

With EverLink® Connector

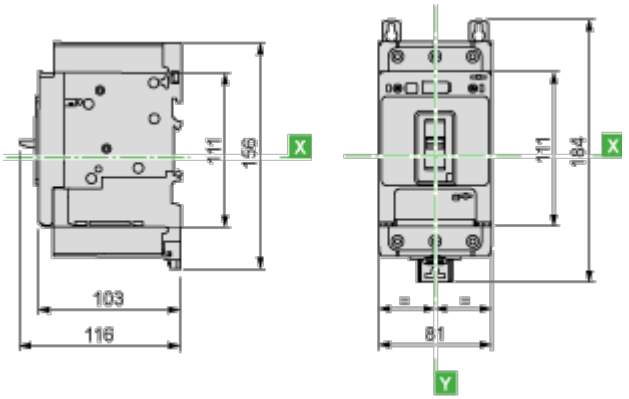

With Crimp Lug Connector

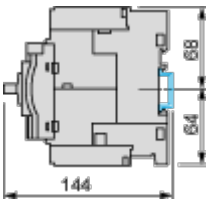

GV4 with Rotary Handle: GV4L, GV4P, or GV4LE, GV4PE, GV4PEM with GV4ADN01, GV4ADN02 Direct Mounting Rotary Handle

Dimensions

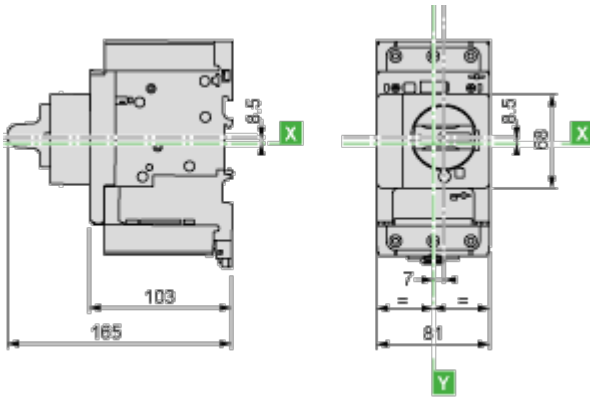

GV4L, GV4P, GV4LE, GV4PE, GV4PEM

Panel Mounting with M4 Screws

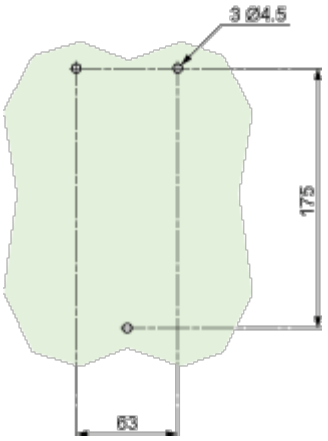

Door Cut-Out for Rotary Handle

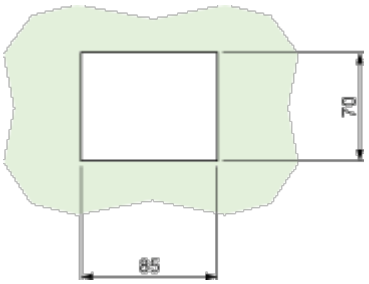

Minimum Safety Clearance

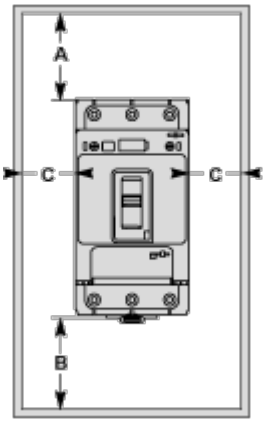

Toggle-type, rotary handle-type: identical clearance values.

Safety Clearance (mm)						
	Painted Sheet Metal			Bare Sheet Metal		
	A	B	C	A	B	C
No accessory	30	0	0	40	0	5
Interphase barriers	0	0	0	0	0	5
Long terminal shield	0	0	0	0	0	5

Connections and Schema

Magnetic Motor Circuit Breakers
GV4P, GV4PE, GV4PEM

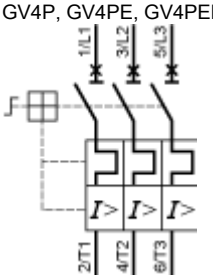

Offer Marketing Illustration

Product benefits / Features

Offer Marketing Illustration

Product benefits / Features

Offer Marketing Illustration

Product benefits / Features

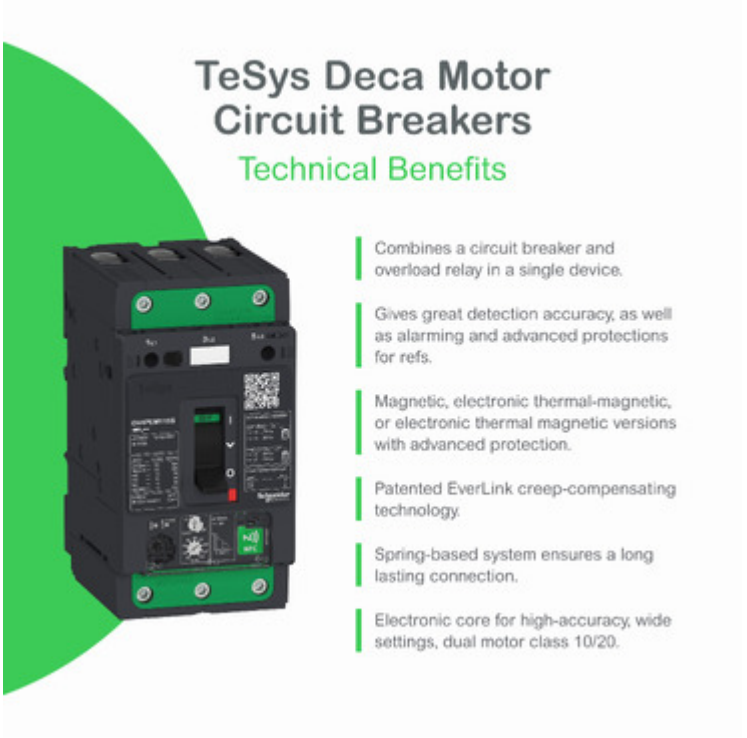

Technical Illustration
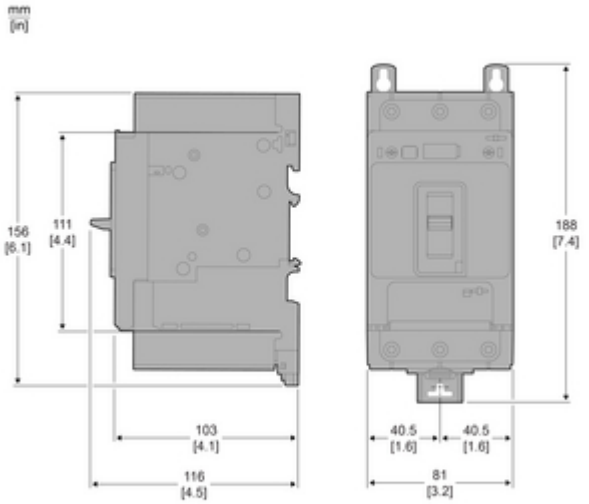
Assembly's dimensions