NVE4651602

Altivar
ATV340, ATV900

Safety Module
VW3A3802

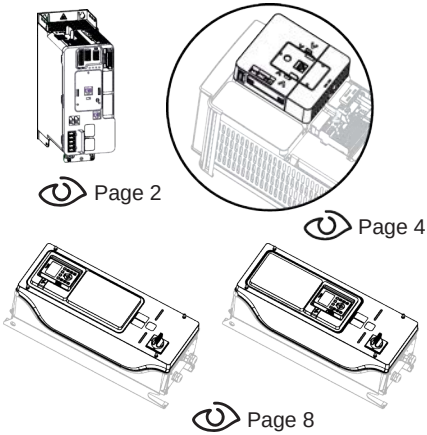

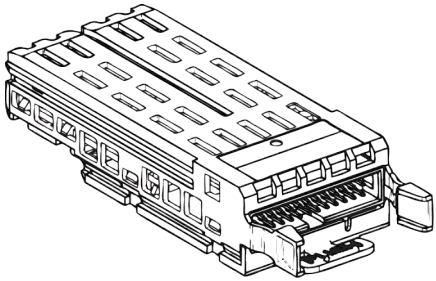

Contact your local Schneider Electric representative for firmware version compatibility between the module and the drive.

⚠ ⚠ DANGER

HAZARD OF ELECTRIC SHOCK, EXPLOSION, OR ARC FLASH

- Only appropriately trained persons who are familiar with and understand the contents of this manual and all other pertinent product documentation and who have received safety training to recognize and avoid hazards involved are authorized to work on and with this drive system. Installation, adjustment, repair and maintenance must be performed by qualified personnel.
- The system integrator is responsible for compliance with all local and national electrical code requirements as well as all other applicable regulations with respect to grounding of all equipment.
- Many components of the product, including the printed circuit boards, operate with mains voltage. Do not touch.
- Only use properly rated, electrically insulated tools and measuring equipment.
- Do not touch unshielded components or terminals with voltage present.
- Motors can generate voltage when the shaft is rotated. Prior to performing any type of work on the drive system, block the motor shaft to prevent rotation.
- AC voltage can couple voltage to unused conductors in the motor cable. Insulate both ends of unused conductors of the motor cable.
- Do not short across the DC bus terminals or the DC bus capacitors or the braking resistor terminals.
- Before performing work on the drive system:
  - Disconnect all power, including external control power that may be present. Take into account that the circuit breaker or main switch does not de-energize all circuits.
  - Place a "Do Not Turn On" label on all power switches related to the drive system.
  - Lock all power switches in the open position.
  - Wait 15 minutes to allow the DC bus capacitors to discharge.
  - Follow the instructions given in the chapter "Verifying the Absence of Voltage".
- Before applying voltage to the drive system:
  - Verify that the work has been completed and that the entire installation cannot cause hazards.
  - If the mains input terminals and the motor output terminals have been grounded and short-circuited, remove the ground and the short circuits on the mains input terminals and the motor output terminals.
  - Verify proper grounding of all equipment.
  - Verify that all protective equipment such as covers, doors, grids is installed and/or closed.

Failure to follow these instructions will result in death or serious injury.

Electrical equipment should be installed, operated, serviced, and maintained only by qualified personnel. No responsibility is assumed by Schneider Electric for any consequences arising out of the use of this product.

© 2019 Schneider Electric. All Rights Reserved.

ATV340

Up to ATV340D22N4•

Mounting

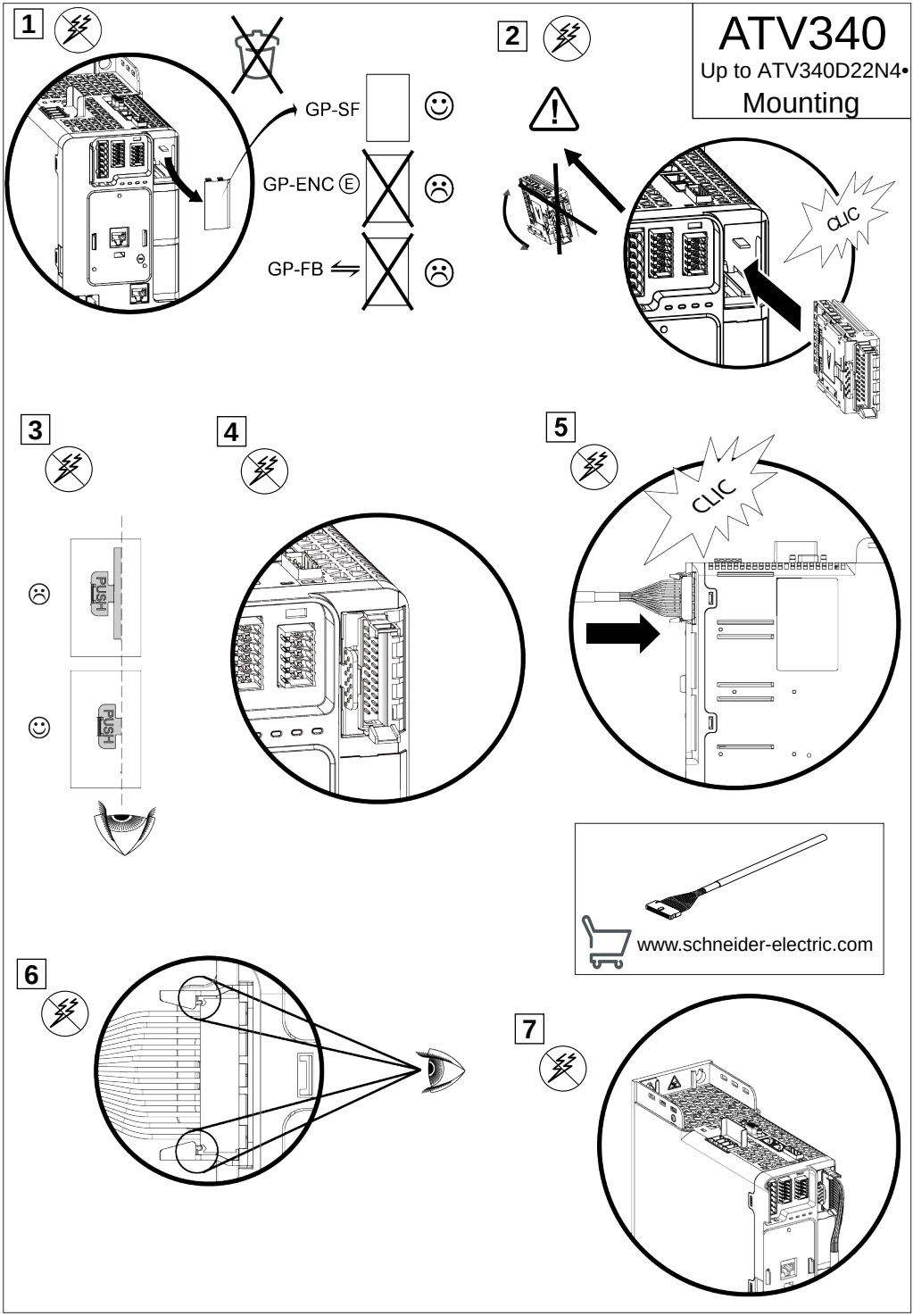

ATV340

Up to ATV340D22N4•

Removing

1

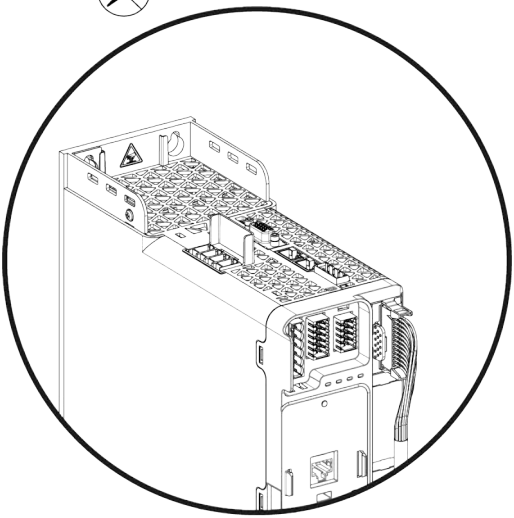

2

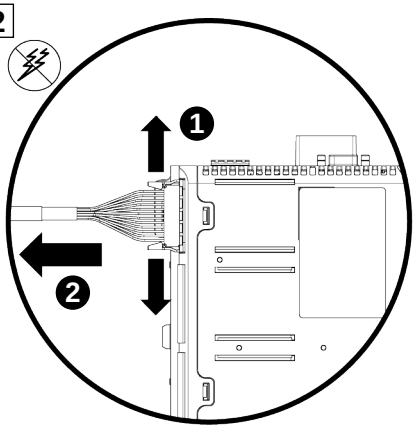

3

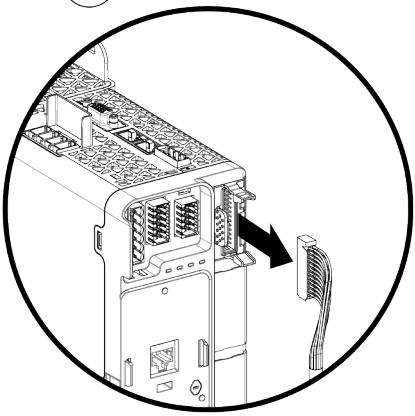

4

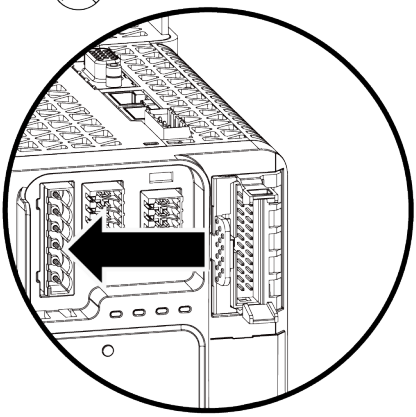

5

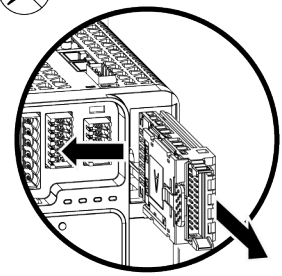

6

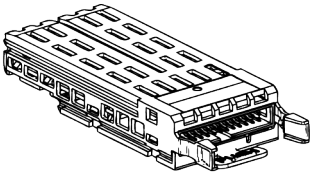

ATV340	ATV900
From ATV340D30N4E	IP21

Mounting

VW3A3800

NHA80733

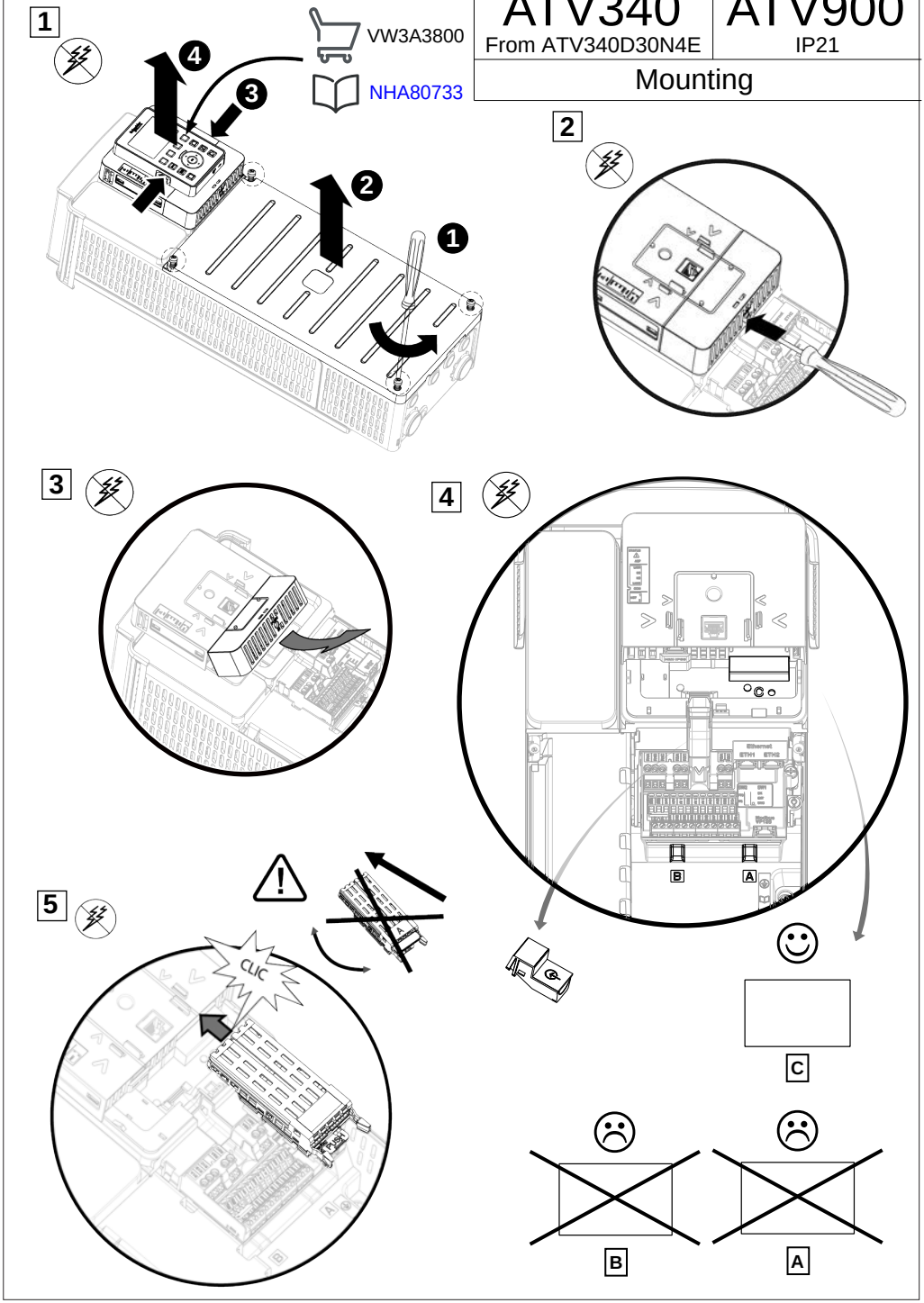

ATV340 | ATV900

From ATV340D30N4E | IP21

Mounting

6

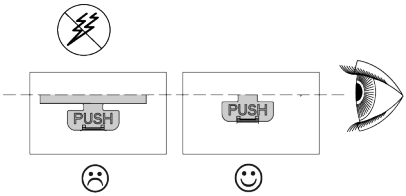

7

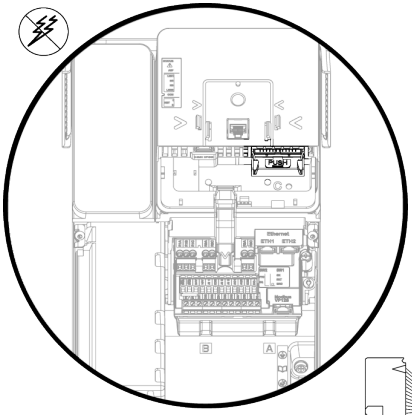

8

www.schneider-electric.com

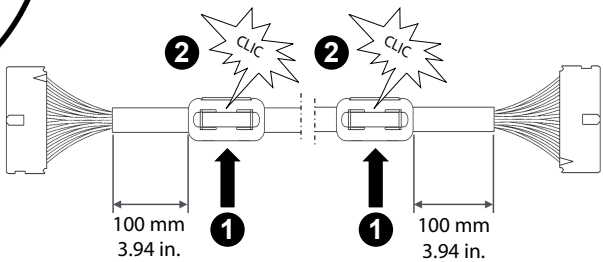

9

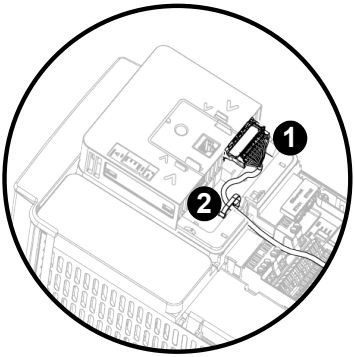

10

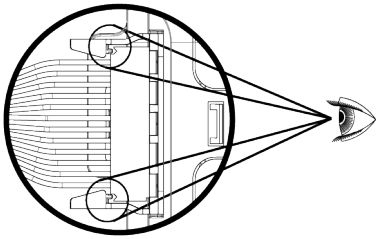

NHA80932 (ATV900)
NVE61069 (ATV340)

11

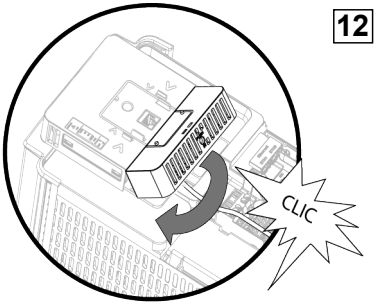

12

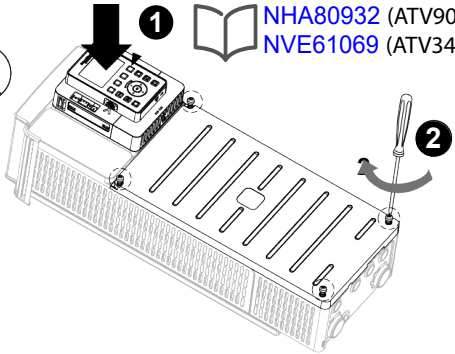

ATV340	ATV900
From ATV340D30N4E	IP21

Removing

1

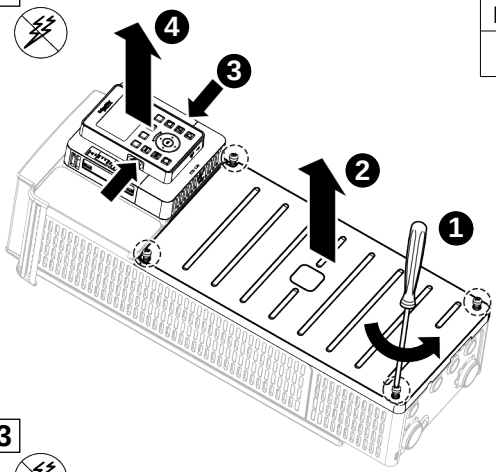

2

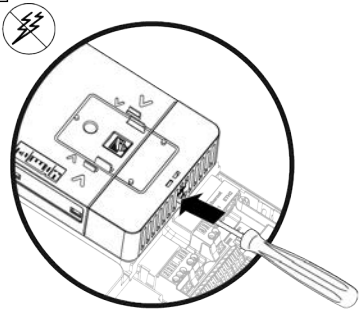

3

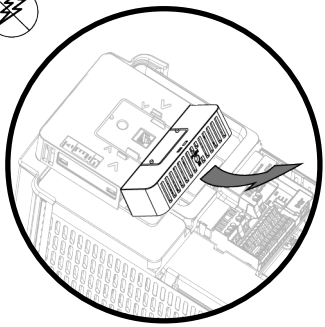

4

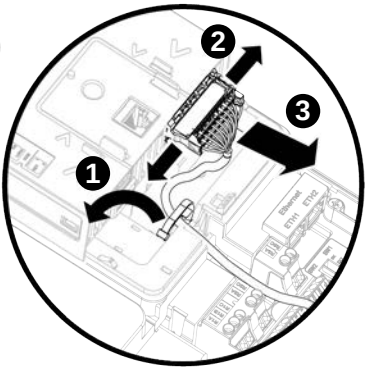

5

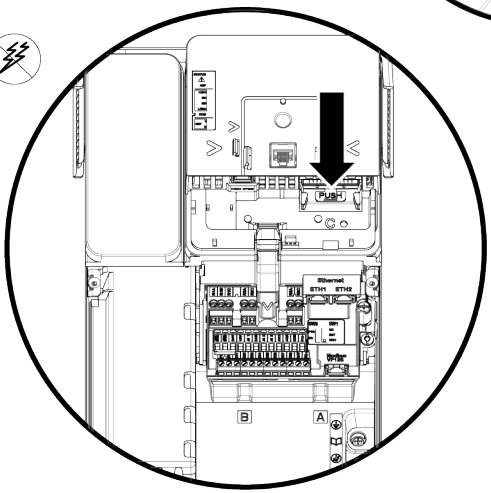

ATV340	ATV900
From ATV340D30N4E	IP21

Removing

6

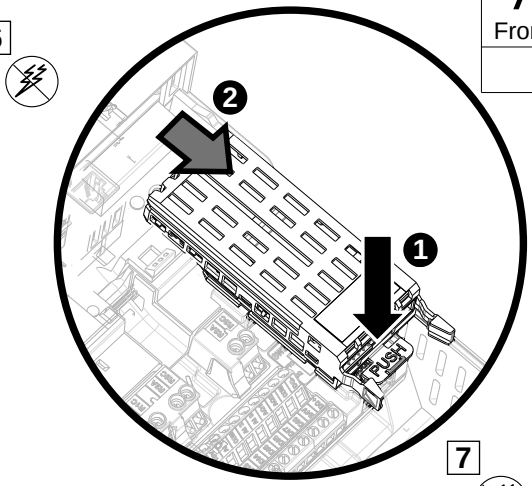

7

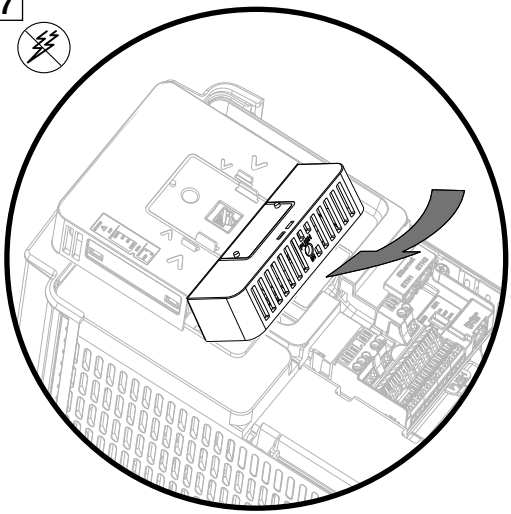

8

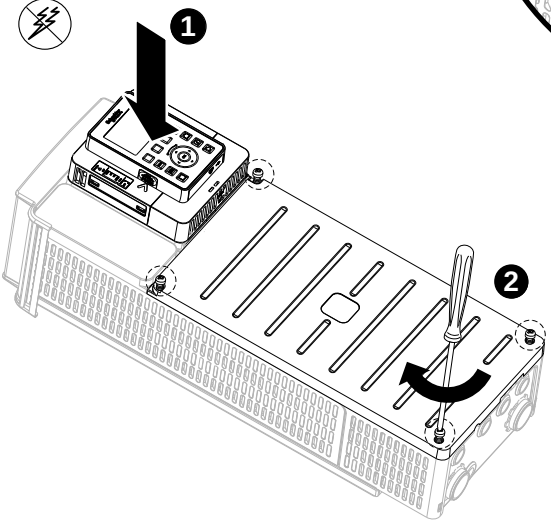

NHA80932 (ATV900)
NVE61069 (ATV340)

ATV900

IP55

Mounting

1 VW3A3800 NHA80733

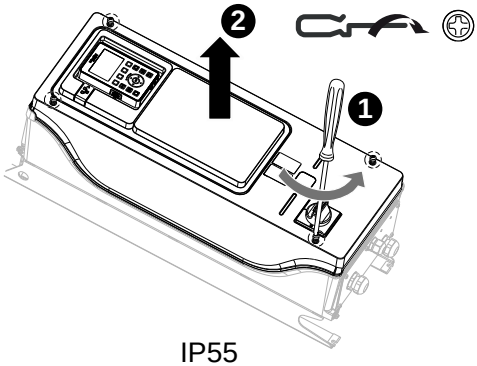

IP55
Up to ATV950D11N4

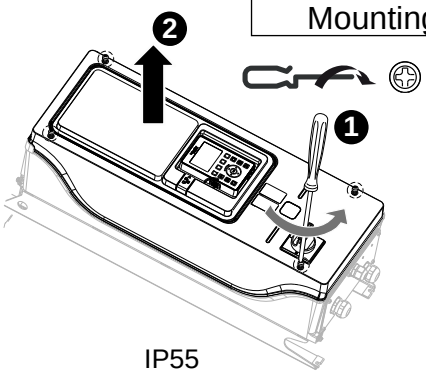

IP55
ATV950D15N4 to D22N4

2

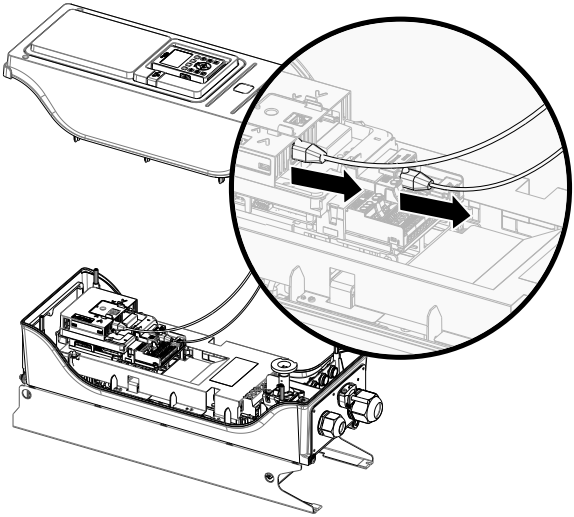

3

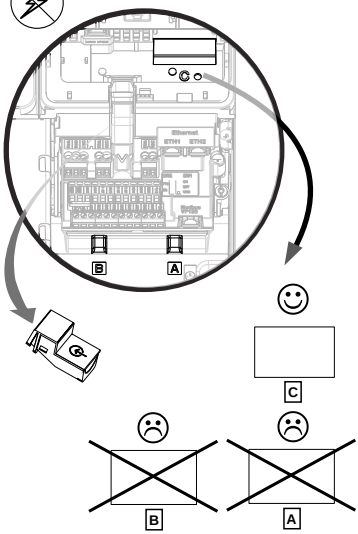

4

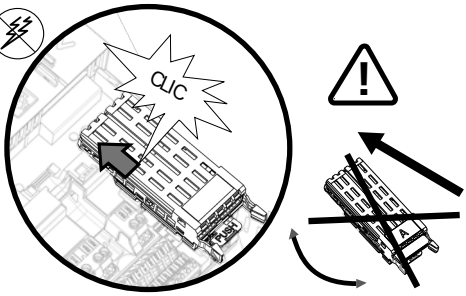

5

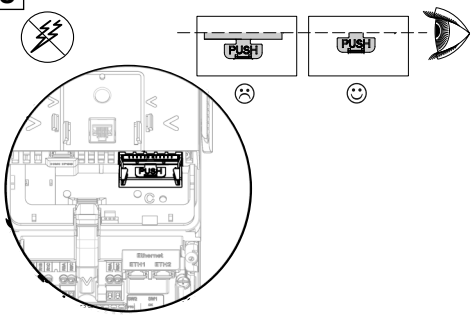

6

www.schneider-electric.com

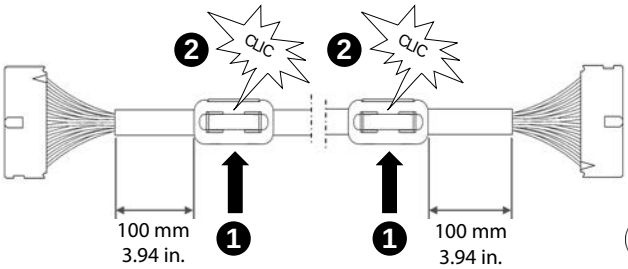

7

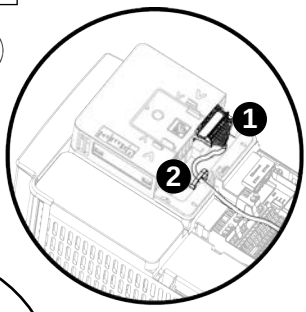

8

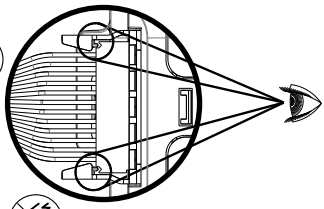

9

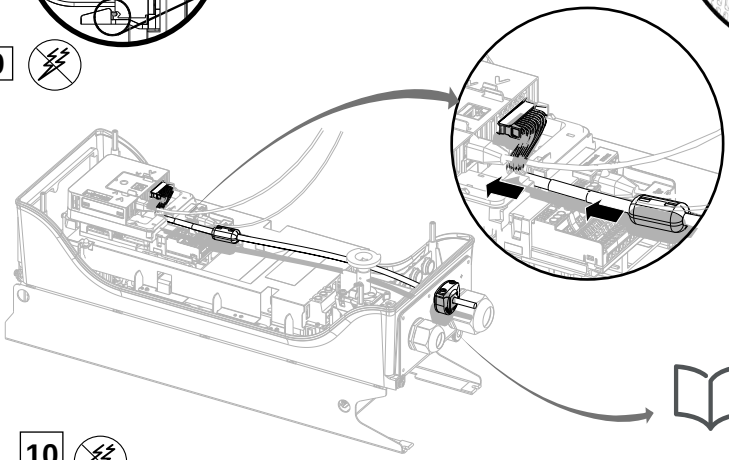

NHA80932 (ATV900)

10

1.5 N•m
13.3 lbf•in

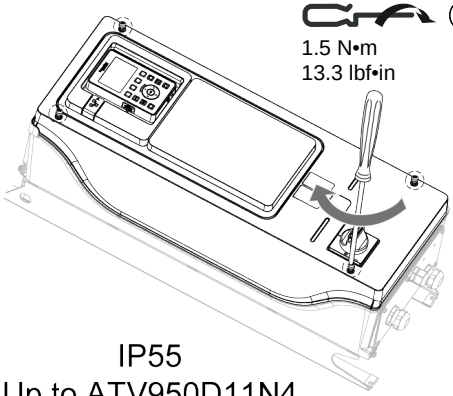

IP55
Up to ATV950D11N4

1.5 N•m
13.3 lbf•in

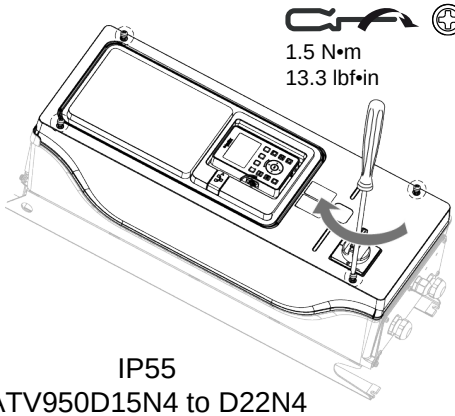

IP55
ATV950D15N4 to D22N4

ATV900

IP55

Removing

1

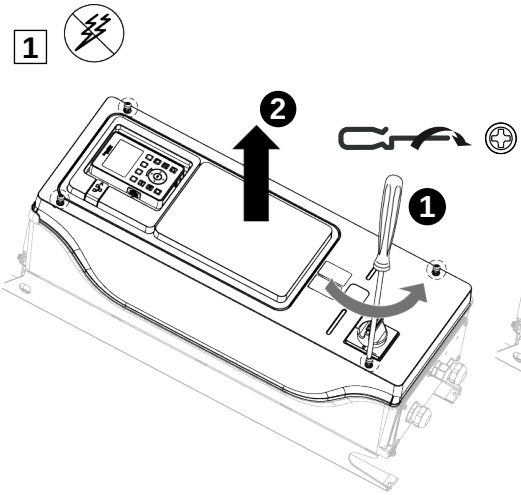

IP55
Up to ATV950D11N4

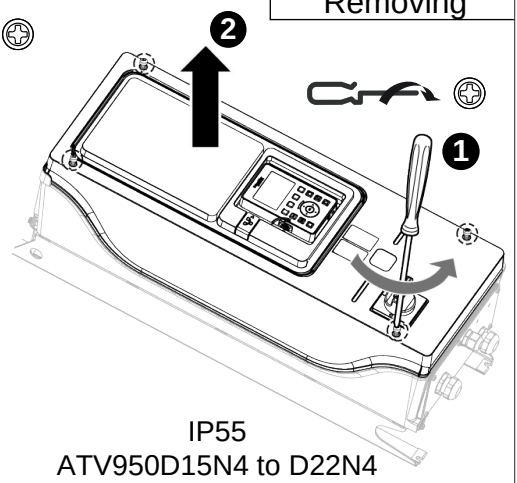

IP55
ATV950D15N4 to D22N4

2

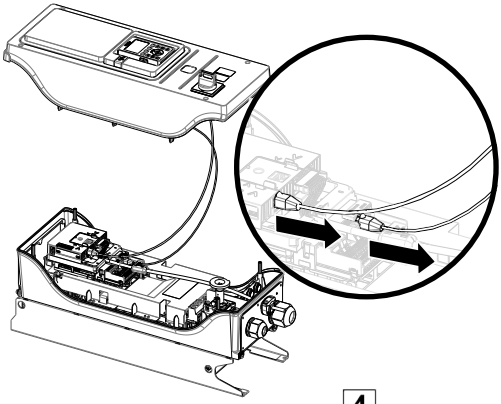

3

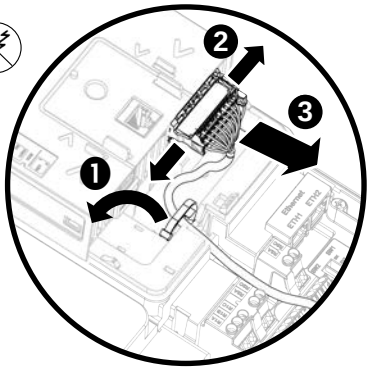

4

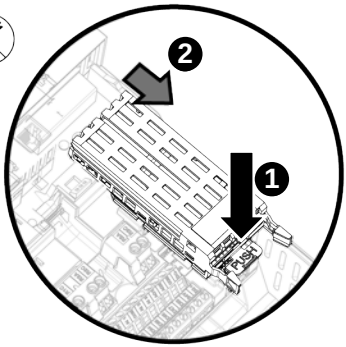

5

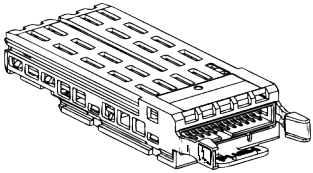

6

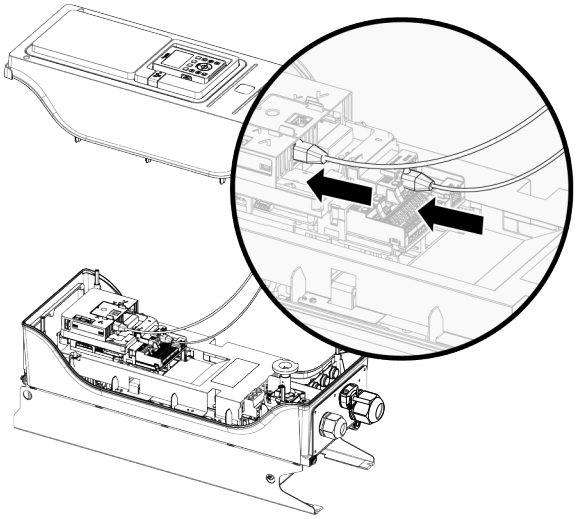

7

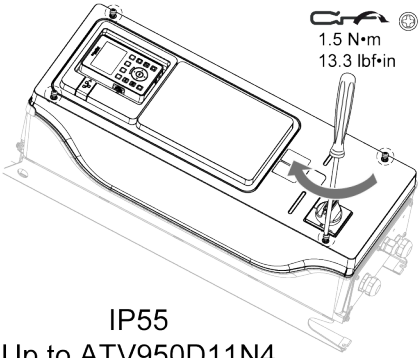

IP55
Up to ATV950D11N4

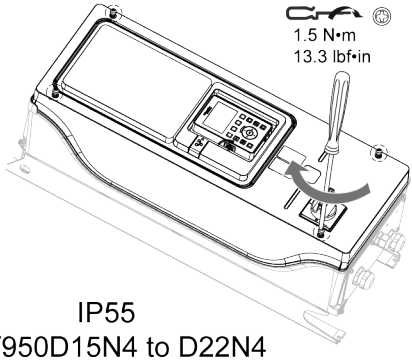

IP55
ATV950D15N4 to D22N4

www.schneider-electric.com

ATV900 Safety Module manual - VW3A3802	NVE64209 (English), NVE64210 (Français), NVE64211 (Deutsch), NVE64212 (Español), NVE64213 (Italiano), NVE64214 (中文) NVE64209TR (Türk), NVE64209PT (Português)
ATV340 Safety Module manual - VW3A3802	NVE61741 (English), NVE61742 (Français), NVE61745 (Deutsch), NVE61747 (Español), NVE61749 (Italiano), NVE61752 (中文) NVE61741TR (Türk), NVE61741PT (Português)
ATV340 Installation manual	NVE61069 (English), NVE61071 (Français), NVE61074 (Deutsch), NVE61075 (Español), NVE61078 (Italiano), NVE61079 (中文) NVE61069TR (Türk), NVE61069PT (Português)
ATV900 Installation manual	NHA80932 (English), NHA80933 (Français), NHA80934 (Deutsch), NHA80935 (Español), NHA80936 (Italiano), NHA80937 (中文) NHA80932TR (Türk), NHA80932PT (Português)