Product data sheet

Specifications

Safety switch, VisiPacT, heavy duty, fused, viewing window, NEMA 12, 600V, 100A, 3 pole, neutral bonded, ground lugs

VH363BAWKGL

Product availability: Non-Stock - Not normally stocked in distribution facility

Main

Product	Single Throw Safety Switch
Duty Rating	Heavy duty
Device Application	Heavy application
Disconnect Type	Fusible disconnect
Factory Installed Neutral	Neutral (factory bonded)
Number of Poles	3
Current Rating	100 A
Voltage Rating	600 V AC/DC
Enclosure Rating	NEMA 12 galvannealed steel
Standard Motor Power Rating	25 hp at 480 V AC 50-60 Hz for 3 phase motors 60 hp at 480 V AC 50-60 Hz for 3 phase motors 30 hp at 600 V AC 50-60 Hz for 3 phase motors 100 hp at 600 V AC 50-60 Hz for 3 phase motors 50 hp at 600 V DC

Complementary

Short-circuit current	200 kA for J
Fuse type	J
Mounting Type	Surface
Electrical Connection	Lugs
Wiring configuration	4-wire (3PH + N)
Wire Size	AWG 12...AWG 1/0 aluminium AWG 14...AWG 1/0 copper
Tightening torque	50 lbf.in (5.6 N.m) (AWG 1...AWG 3/0) 45 lbf.in (5.08 N.m) (AWG 6...AWG 4) 40 lbf.in (4.5 N.m) 0.013 in² (8.367 mm²) (AWG 8) 35 lbf.in (4.0 N.m) 0.003…0.008 in² (2.06…5.261 mm²) (AWG 14...AWG 10)
Depth	7.15 in (181.61 mm)
Width	8.92 in (226.57 mm)
Height	20.49 in (520.45 mm)
Net Weight	20.99 lb(US) (9.52 kg)
Grounding Kit	Factory installation
Service Entrance	Suitable service entrance for Canada

Price is “List Price” and may be subject to a trade discount – check with your local distributor or retailer for actual price.

Disclaimer: This documentation is not intended as a substitute for and is not to be used for determining suitability or reliability of these products for specific user applications

Environment

Certifications	UL listed file E2875
Standards	UL98 CSA C22.2 No 4 NOM-003-SCFI-2000

Ordering and shipping details

Category	US10DE100113
Discount Schedule	0DE1
GTIN	3606485894164
Returnability	No
Country of origin	US

Packing Units

Unit Type of Package 1	PCE
Nbr. of units in pkg.	1
Package 1 Height	22.62 in (57.4675 cm)
Package 1 Width	10.38 in (26.3525 cm)
Package 1 Length	7.00 in (17.78 cm)
Package weight(Lbs)	20.9 lb(US) (9.5 kg)

Environmental Data

Schneider Electric aims to achieve Net Zero status by 2050 through supply chain partnerships, lower impact materials, and circularity via our ongoing “Use Better, Use Longer, Use Again” campaign to extend product lifetimes and recyclability.

Environmental Data explained

How we assess product sustainability

Environmental footprint

Carbon footprint (kg CO2 eq, Total Life cycle)	111
Environmental Disclosure	Product Environmental Profile

Use Better

Materials and Substances

Packaging made with recycled cardboard	Yes
Packaging without single use plastic	Yes
EU RoHS Directive	Compliant
REACh Regulation	REACh Declaration
California proposition 65	WARNING: This product can expose you to chemicals including: Lead and lead compounds, which is known to the State of California to cause cancer and birth defects or other reproductive harm. For more information go to www.P65Warnings.ca.gov

Use Again

Repack and remanufacture

Circularity Profile	No need of specific recycling operations
Take-back	No

Technical Illustration

Dimensions

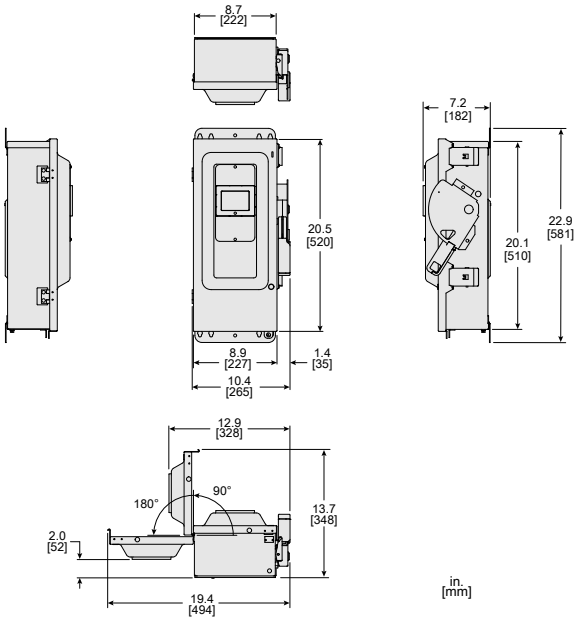

ALL DIMENSIONS ARE APPROXIMATE.
REFER TO TECHNICAL DRAWINGS AND DOCUMENTATION FOR COMPLETE INFORMATION.

Technical Illustration

Wiring diagram

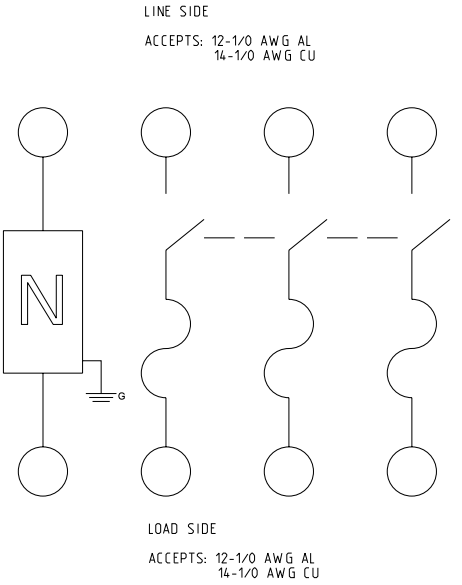

CATALOG NO.VH363BAWKGL
REFER TO TECHNICAL DRAWINGS AND DOCUMENTATION FOR COMPLETE INFORMATION.