Product data sheet

Specifications

Mini circuit breaker, Homeline Canadian, 20A, 1 pole, 120VAC, 10kA AIR, combo ARC/ground fault, plug in, UL [TAA]

CHOM120DF

Product availability: Stock - Normally stocked in distribution facility

Main

Range of Product	Homeline
Product or Component Type	Miniature circuit-breaker
Line Rated Current	20 A
Connections - Terminals	Pigtail neutral
[Ue] rated operational voltage	120 V AC
Mounting Mode	Plug-on
Poles description	1P
Short-circuit current	10 kA
Circuit breaker type	ARC-fault Ground fault protecting class A 5 mA
Electrical Connection	Pigtail connector Screw clamp terminals

Complementary

Number of spaces required	1

Environment

Product Certifications	CSA
Ambient air temperature for operation	104 °F (40 °C)

Ordering and shipping details

Category	US10NET39997
Discount Schedule	0NET
GTIN	785901741596
Returnability	Yes
Country of origin	MX

Packing Units

Unit Type of Package 1	PCE
Nbr. of units in pkg.	1
Package 1 Height	1.34 in (3.4 cm)
Package 1 Width	3.82 in (9.7 cm)

Price is “List Price” and may be subject to a trade discount – check with your local distributor or retailer for actual price.

Disclaimer: This documentation is not intended as a substitute for and is not to be used for determining suitability or reliability of these products for specific user applications

Package 1 Length	5.51 in (14.0 cm)
Package weight(Lbs)	15.2 oz (431 g)

Environmental Data

Schneider Electric aims to achieve Net Zero status by 2050 through supply chain partnerships, lower impact materials, and circularity via our ongoing “Use Better, Use Longer, Use Again” campaign to extend product lifetimes and recyclability.

Environmental Data explained

How we assess product sustainability

Environmental footprint

Carbon footprint (kg CO2 eq, Total Life cycle)	40
Environmental Disclosure	Product Environmental Profile

Use Better

Materials and Substances

Packaging made with recycled cardboard	No
Packaging without single use plastic	Yes
EU RoHS Directive	Compliant with Exemptions
Halogen content performance	Halogen free product

Use Again

Repack and remanufacture

Circularity Profile	End of Life Information
Take-back	No

Technical Illustration

Dimensions

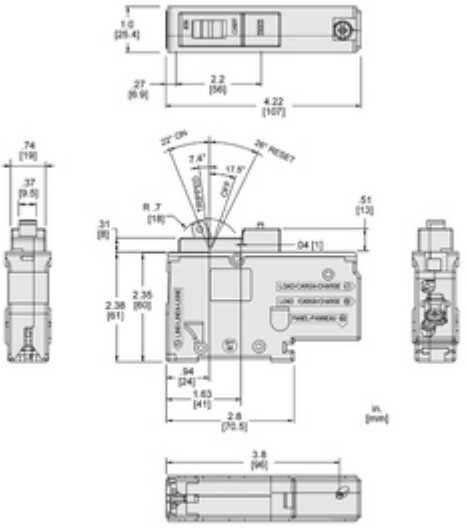

All dimensions are approximate. Also refer to technical drawings and documentation.