Product data sheet

Specifications

Mini circuit breaker, Homeline Canadian, 20A, 1 pole, 120VAC, 10kA AIR, combo arc fault, plug on neutral, plug in, UL [TAA]

CHOM120PCAFI

Product availability: Stock - Normally stocked in distribution facility

Main

Range of Product	Homeline
Product or Component Type	Miniature circuit-breaker
Line Rated Current	20 A
Connections - Terminals	Plug-on neutral
[Ue] rated operational voltage	120 V AC
Mounting Mode	Plug-on
Poles description	1P
Short-circuit current	10 kA
Circuit breaker type	Combination ARC-fault

Complementary

Number of spaces required	1

Environment

Product Certifications	CSA
Ambient Air Temperature for Operation	104 °F (40 °C)

Ordering and shipping details

Category	US10NET39997
Discount Schedule	0NET
GTIN	785901121022
Returnability	Yes
Country of origin	MX

Packing Units

Unit Type of Package 1	PCE
Nbr. of units in pkg.	1
Package 1 Height	4.00 in (10.16 cm)
Package 1 Width	1.40 in (3.556 cm)
Package 1 Length	5.10 in (12.954 cm)
Package weight(Lbs)	9.600 oz (272.155 g)

Price is “List Price” and may be subject to a trade discount – check with your local distributor or retailer for actual price.

Disclaimer: This documentation is not intended as a substitute for and is not to be used for determining suitability or reliability of these products for specific user applications

Unit Type of Package 2	CAR
Number of Units in Package 2	40
Package 2 Height	4.00 in (10.16 cm)
Package 2 Width	14.00 in (35.56 cm)
Package 2 Length	21.00 in (53.34 cm)
Package 2 Weight	24.709 lb(US) (11.208 kg)

Environmental Data

Schneider Electric aims to achieve Net Zero status by 2050 through supply chain partnerships, lower impact materials, and circularity via our ongoing “Use Better, Use Longer, Use Again” campaign to extend product lifetimes and recyclability.

Environmental Data explained >

How we assess product sustainability >

Environmental footprint

Carbon footprint (kg CO2 eq, Total Life cycle)	**40**
Environmental Disclosure	**Product Environmental Profile**

Use Better

Materials and Substances

Packaging made with recycled cardboard	**No**
Packaging without single use plastic	**Yes**
EU RoHS Directive	**Compliant with Exemptions**
Halogen content performance	**Halogen free product**

Use Again

Repack and remanufacture

Circularity Profile	**End of Life Information**
Take-back	**No**

Technical Illustration
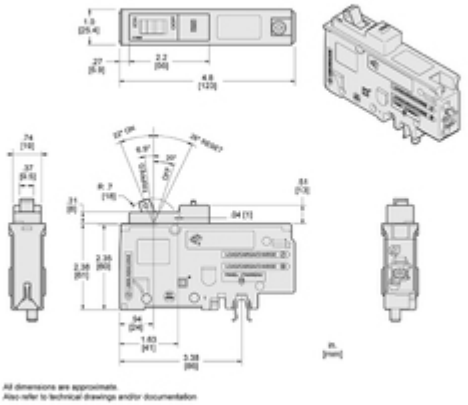
Dimensions