Product data sheet

Specifications

Power relay, SE Relays, 15A, 4PDT, 120 VAC, cover with locking push button and LED

784XDXM4L-120A

Product availability: Stock - Normally stocked in distribution facility

Main

Product Range	Legacy
Product Type	Power relay
Switch Function	4PDT
Contact Composition	4 NO + 4 NC

Complementary

Input Current	15 A
Contacts Material	Silver alloy, gold flashed
Local Signalling	LED Flag
Control Type	Lockable test button
Minimum Switching Current	10 mA 17 V
Coil Resistance	2100 Ohm
Input voltage	120 V AC
Drop-out Voltage Threshold	>= 0.15 Uc AC >= 0.1 Uc DC
Rated Operational Current	15 A at 120...277 V AC conforming to UL 15 A at 28 V DC conforming to UL 15 A at 120/150 V AC conforming to CSA 10 A at 151/277 V AC conforming to CSA 15 A at 28 V DC conforming to CSA 15 A at 250 V AC (NO) conforming to IEC 15 A at 28 V DC (NO) conforming to IEC 7.55 A at 250 V AC (NC) conforming to IEC 7.55 A at 28 V DC (NC) conforming to IEC
Power consumption in W	1.95 W DC
Power consumption in VA	2.85 VA AC
Voltage Range	0.8...1.1 Un AC/DC
Maximum Switching Voltage	300 V AC UL 300 V AC CSA 250 V AC IEC
Motor Power HP	0.5 hp 120 V AC 50/60 Hz 1 hp 277 V AC 50/60 Hz
Connections Terminals	Faston terminals
Mounting	Socket
Height	1.5 in (39.1 mm)
Width	0.8 in (21 mm)

Price is “List Price” and may be subject to a trade discount – check with your local distributor or retailer for actual price.

Disclaimer: This documentation is not intended as a substitute for and is not to be used for determining suitability or reliability of these products for specific user applications

Depth	1.07 in (27.3 mm)
Product Weight	2.8 oz (80 g)
Operating Time	20 ms operating 20 ms tripping

Environment

Ambient Air Temperature for Operation	-40…131 °F (-40…55 °C)
Ambient Air Temperature for Storage	-40…185 °F (-40…85 °C)
Product Certifications	UL CE CSA
Electrical Durability	100000 cycles resistive
Mechanical Durability	10000000 cycles
Dielectric Strength	2000 V AC between coil and contact 2000 V AC between poles 1500 V AC between contacts
Shock Resistance	15 gn in operation
Vibration Resistance	+/- 1 mm 10…35 Hz) 3 gn 35…150 Hz)

Ordering and shipping details

Category	US10CP221127
Discount Schedule	0CP2
GTIN	3606480281280
Returnability	Yes
Country of origin	CN

Packing Units

Unit Type of Package 1	PCE
Number of Units in Package 1	1
Package 1 Height	1.07 in (2.73 cm)
Package 1 Width	1.60 in (4.06 cm)
Package 1 Length	2.07 in (5.27 cm)
Package 1 Weight	2.8 oz (80 g)

Environmental Data

Schneider Electric aims to achieve Net Zero status by 2050 through supply chain partnerships, lower impact materials, and circularity via our ongoing “Use Better, Use Longer, Use Again” campaign to extend product lifetimes and recyclability.

Environmental Data explained >

How we assess product sustainability >

Environmental footprint

Environmental Disclosure	Product Environmental Profile

Use Better

Materials and Substances

Packaging without single use plastic	Yes
EU RoHS Directive	Pro-active compliance (Product out of EU RoHS legal scope)
REACh Regulation	REACh Declaration
California proposition 65	WARNING: This product can expose you to chemicals including: Nickel compounds, which is known to the State of California to cause cancer, and Di-isodecyl phthalate (DIDP), which is known to the State of California to cause birth defects or other reproductive harm. For more information go to www.P65Warnings.ca.gov

Use Again

Repack and remanufacture

Circularity Profile	End of Life Information
Take-back	No
WEEE	The product must be disposed on European Union markets following specific waste collection and never end up in rubbish bins.

Dimensions Drawings

Approximate Dimensions

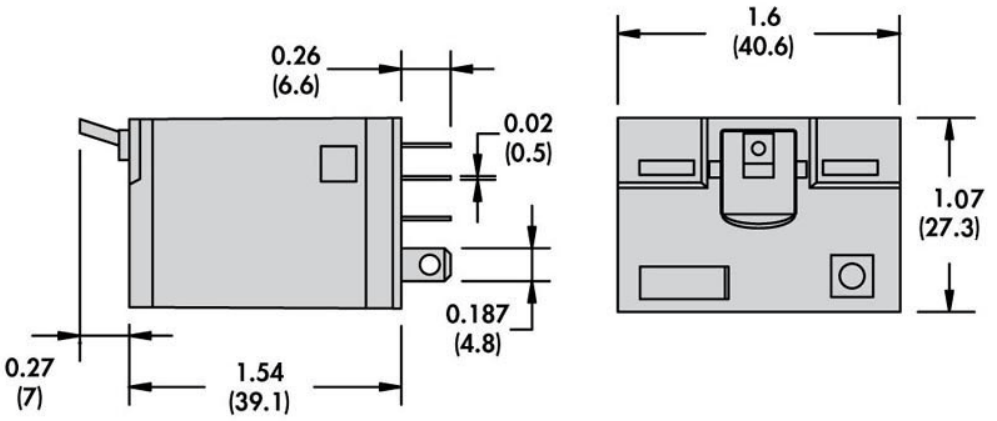

Connections and Schema
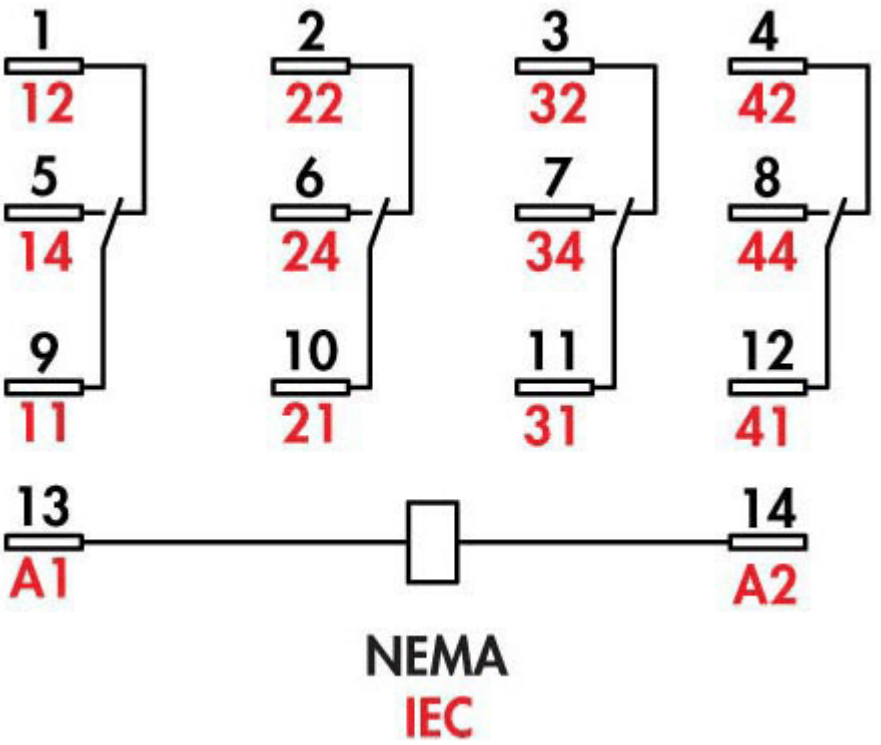
Connections and Wiring Diagrams