Product data sheet

Specifications

To be discontinued

Homeline All In One combination service entrance device, semi flush, ringed socket, manual bypass, UG, 400 A, 30 spaces

SU3040D400FB

To be discontinued on: Dec 25, 2025

Product availability: Stock - Normally stocked in distribution facility

Main

Product or Component Type	All-In-One
Range of Product	Homeline
Meter socket type	Ringed
Hub type	A-L

Complementary

Line Rated Current	400 A
Number of Phases	Single phase
Short-circuit current	25 kA
Mounting	Semi flush
Number of spaces	30
Number of circuits	40
Number of Tandem Breakers	10
Electrical connection	Lugs, service ground Studs, line side
Wire Size	AWG 4...250 kcmil (aluminium) service ground AWG 4...250 kcmil (copper) service ground
Tightening torque	Terminal screw 250 lb.in, AWG 4...250 kcmil, aluminium/copper Service ground 50 lb.in, AWG 1/0, aluminium/copper Service ground 45 lb.in, AWG 6...AWG 1, aluminium/copper Service ground 40 lb.in, AWG 8, aluminium/copper Branch lugs 50 lb.in, AWG 3...AWG 2/0, aluminium/copper Branch lugs 35 lb.in, AWG 6...AWG 4, aluminium/copper Branch lugs 25 lb.in, AWG 8, aluminium/copper Branch lugs 20 lb.in, AWG 14...AWG 10, aluminium/copper Branch lugs 20 lb.in, AWG 12...AWG 10, aluminium/copper Cover 10 lb.in
Disconnect	Service disconnect (factory installed)
Disconnect Rating	200 A
Branch Breaker Rating	200 A
Service feed location	UG
Bypass type	Class 320 manual bypass
Connections - Terminals	Lugs
Width	28.25 in (717.55 mm)

Price is “List Price” and may be subject to a trade discount – check with your local distributor or retailer for actual price.

Disclaimer: This documentation is not intended as a substitute for and is not to be used for determining suitability or reliability of these products for specific user applications

Depth	7.50 in (190.50 mm)
Height	41.25 in (1047.75 mm)
Bus Rating	200.0 A

Environment

NEMA Rating	NEMA 3R
Product Certifications	UL Listed

Ordering and shipping details

Category	US1DE3A00148
Discount Schedule	DE3A
GTIN	785901558644
Returnability	Yes
Country of origin	MX

Packing Units

Unit Type of Package 1	PCE
Nbr. of units in pkg.	1
Package 1 Height	9.80 in (24.9 cm)
Package 1 Width	29.69 in (75.4 cm)
Package 1 Length	42.99 in (109.2 cm)
Package weight(Lbs)	110.000 lb(US) (49.895 kg)

Contractual warranty

Warranty	18 months

Environmental Data

Schneider Electric aims to achieve Net Zero status by 2050 through supply chain partnerships, lower impact materials, and circularity via our ongoing “Use Better, Use Longer, Use Again” campaign to extend product lifetimes and recyclability.

Environmental Data explained

How we assess product sustainability

Environmental footprint

Environmental Disclosure	Product Environmental Profile

Use Better

Materials and Substances

Packaging made with recycled cardboard	No
Packaging without single use plastic	Yes
EU RoHS Directive	Compliant with Exemptions
REACh Regulation	REACh Declaration
California proposition 65	WARNING: This product can expose you to chemicals including: Lead and lead compounds, which is known to the State of California to cause cancer and birth defects or other reproductive harm. For more information go to www.P65Warnings.ca.gov

Use Again

Repack and remanufacture

Circularity Profile	No need of specific recycling operations
Take-back	No

Technical Illustration

Dimensions

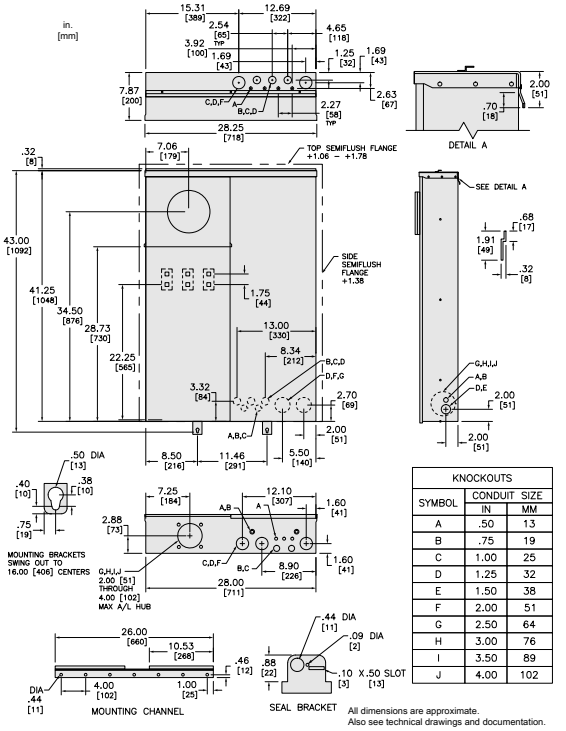

KNOCKOUTS		
SYMBOL	CONDUIT SIZE	
	IN	MM
A	.50	13
B	.75	19
C	1.00	25
D	1.25	32
E	1.50	38
F	2.00	51
G	2.50	64
H	3.00	76
I	3.50	89
J	4.00	102

All dimensions are approximate.
Also see technical drawings and documentation.

Technical Illustration

Wiring diagram

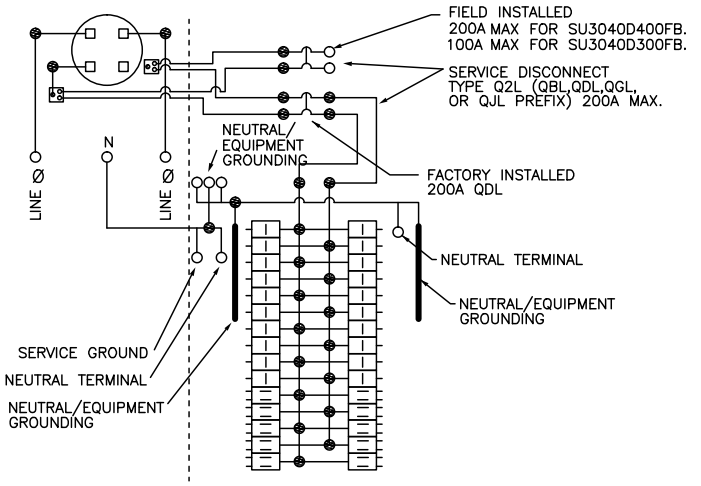

ONE SINGLE POLE, ONE PLUG-ON SPACE TYPE HOM ONLY. TWO POLE TYPE HOM OR HOMA (125A MAX.) MAY PLUG-ON TWO ADJACENT SPACES. TWO POLE TYPE HOMA (150-200A MAX.) MAY PLUG-ON FOUR ADJACENT SPACES (RIGHT SIDE ONLY).

TWO SINGLE POLE, ONE PLUG-ON SPACE TYPE HOMT OR ONE SINGLE POLE TYPE HOM. TWO POLE TYPE HOM OR HOMA (125A MAX.) MAY PLUG-ON TWO ADJACENT SPACES. TWO POLE TYPE HOMA (150-200A MAX.) MAY PLUG-ON FOUR ADJACENT SPACES (RIGHT SIDE ONLY).