Product data sheet

Specifications

Hermetically sealed plug-in relays, SE Relays, 3A, 4 CO, 6VDC

782XDXH10-6D

Product availability: Stock - Normally stocked in distribution facility

Main

Range of Product	Harmony Electromechanical Relays
Series name	782H series
Product or Component Type	Plug-in relay
Contacts type and composition	4 C/O
Relay Type	Hermetically sealed relay
Status LED	Without
[Uc] control circuit voltage	6 V DC
cover options	Hermetically sealed
[Ithe] conventional enclosed thermal current	3 A
Local signalling	Without LED without lockable test button

Complementary

class number	782H
Minimum switching current	100 mA 12 V AC 100 mA 12 V DC
Electrical durability	100000 cycles resistive IEC
Dielectric strength	1600 V AC between coil and contact 1600 V AC between poles
Control Type	Without lockable test button
Coil resistance	40 Ohm
Average coil consumption	0.90 W
Response Time	20 ms
Associated fuse rating	6 A gG at 400 V coordination type 2 for power circuit
Short-circuit current	1 kA
Average pole impedence	2 mOhm
Maximum switching voltage	240 V AC
[Ie] rated operational current	3 A at 120 V AC (on resistive load) 3 A at 240 V AC (on resistive load) 3 A at 30 V DC (on resistive load)
Mechanical durability	10000000 cycles
Contacts material	Gold flashed fine silver
Shape of pin	Flat (faston type)
Width	0.90 in (22.75 mm)

Price is “List Price” and may be subject to a trade discount – check with your local distributor or retailer for actual price.

Disclaimer: This documentation is not intended as a substitute for and is not to be used for determining suitability or reliability of these products for specific user applications

Height	1.3 in (32.5 mm)
Depth	1.13 in (28.75 mm)
Product Weight	1.6 oz (45 g)

Environment

Shock resistance	10 gn
Vibration resistance	6 gn 10…55 Hz)
Environmental characteristic	Hazardous location T5 70 °C
Product Certifications	UL CSA CE
Ambient Air Temperature for Storage	-76…185 °F (-60…85 °C)
Ambient Air Temperature for Operation	-49…158 °F (-45…70 °C)

Ordering and shipping details

Category	US10CP221127
Discount Schedule	0CP2
GTIN	3606481108319
Returnability	Yes
Country of origin	CN

Packing Units

Unit Type of Package 1	PCE
Nbr. of units in pkg.	1
Package 1 Height	1.13 in (2.875 cm)
Package 1 Width	0.90 in (2.275 cm)
Package 1 Length	1.13 in (2.875 cm)
Package weight(Lbs)	1.6 oz (45 g)
Unit Type of Package 2	CAR
Number of Units in Package 2	100
Package 2 Height	7.09 in (18 cm)
Package 2 Width	10.16 in (25.8 cm)
Package 2 Length	13.19 in (33.5 cm)
Package 2 Weight	11.9 lb(US) (5.4 kg)

Environmental Data

Schneider Electric aims to achieve Net Zero status by 2050 through supply chain partnerships, lower impact materials, and circularity via our ongoing “Use Better, Use Longer, Use Again” campaign to extend product lifetimes and recyclability.

Environmental Data explained

How we assess product sustainability

Environmental footprint

Environmental Disclosure	Product Environmental Profile

Use Better

Materials and Substances

Packaging made with recycled cardboard	Yes
Packaging without single use plastic	Yes
EU RoHS Directive	Pro-active compliance (Product out of EU RoHS legal scope)
California proposition 65	WARNING: This product can expose you to chemicals including: Nickel compounds, which is known to the State of California to cause cancer, and Di-isodecyl phthalate (DIDP), which is known to the State of California to cause birth defects or other reproductive harm. For more information go to www.P65Warnings.ca.gov

Use Again

Repack and remanufacture

Circularity Profile	End of Life Information
Take-back	No

Dimensions Drawings

Dimensions

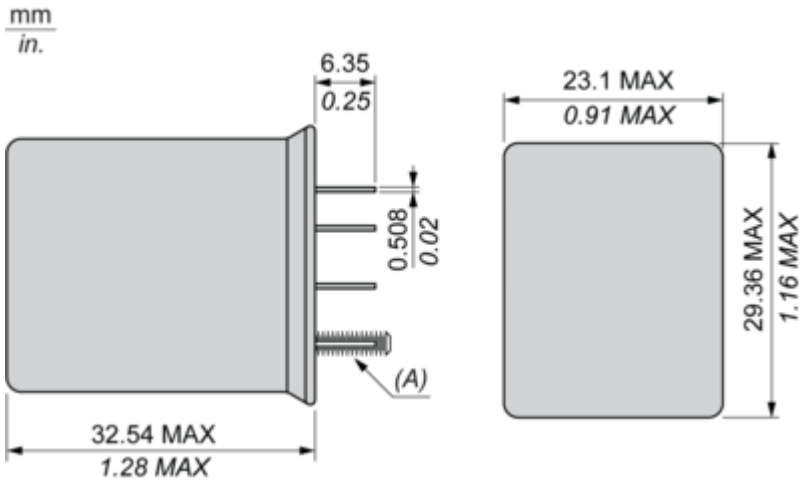

(A) : 0.312 (7.92) LONG #3-48 THREAD

Connections and Schema

Wiring

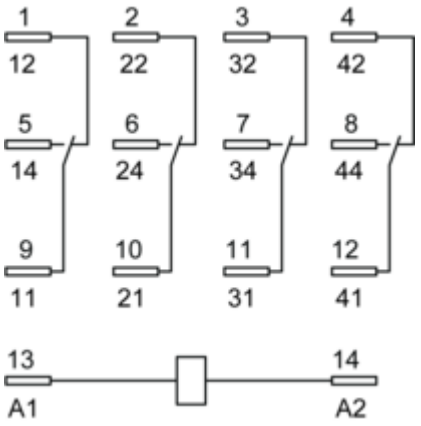

Technical Illustration

Dimensions

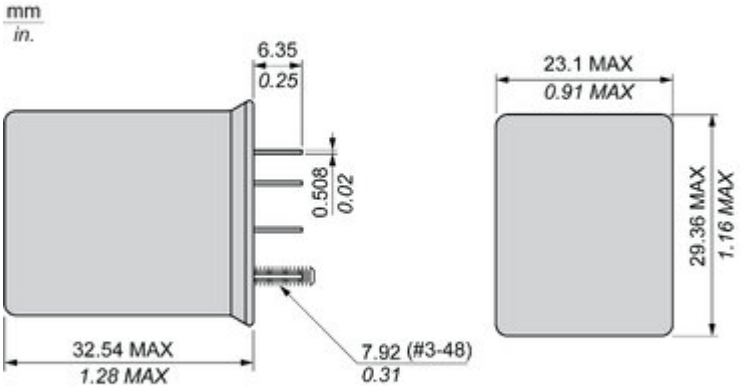

Image of product / Alternate images

Alternative

CONTACTS:
3 AMP 120/240 VAC, 30 VDC
Made in China2019-W38-ADL

Image of product in real life situation