Product data sheet

Specifications

discrete output module Modicon Momentum - 8 O solid state

170ADO53050

Product availability: Non-Stock - Not normally stocked in distribution facility

Main

Range of Product	Modicon Momentum automation platform
Product or Component Type	Discrete output base AC
Group of channels	2 groups of 4 outputs
Discrete output number	8
Discrete output type	Triac
Discrete output voltage	120 V AC
Current per channel	2 A
Short-circuit protection	Internal fuse, 5 A slow-blow per group
Protective treatment	TC

Complementary

[Ue] rated operational voltage	120 V AC
Discrete output current	4 A per group 8 A per module
Minimum output current	5 mA
Maximum leakage current	1.9 mA 120 V AC
Surge current	10 A for 2 cycles 15 A for 1 cycle 5 A for 3 cycles
Maximum voltage drop	<1.5 V 2 A at state 1
Output overload protection	Internal fuse
Response time	1/2 x 1/f (= 0.5 of one line cycle) from state 0 to state 1 1/2 x 1/f (= 0.5 of one line cycle) from state 1 to state 0
Isolation between channels and bus	1780 V AC for 1 minute
Power dissipation	7.5 W maximum 6 W typical
Marking	CE
Local signalling	8 LEDs for channel status
Current consumption	125 mA 120 V AC

Disclaimer: This documentation is not intended as a substitute for and is not to be used for determining suitability or reliability of these products for specific user applications

Price is “List Price” and may be subject to a trade discount – check with your local distributor or retailer for actual price.

Terminals description PLC n°1	(4)OUT_DIS#4 (2)OUT_DIS#2 (1)OUT_DIS#1 (3)OUT_DIS#3 (1L+)PW TB (5)OUT_DIS#5 (6)OUT_DIS#6 (1N)PW (7)OUT_DIS#7 (8)OUT_DIS#8
Depth	1.9 in (47.5 mm)
Height	5.6 in (141.5 mm)
Width	4.9 in (125 mm)
Net Weight	0.71 lb(US) (0.32 kg)

Environment

Product Certifications	CSA FM Class 1 Division 2 UL
Resistance to electrostatic discharge	4 kV contact IEC 801-2 8 kV on air IEC 801-2
Resistance to electromagnetic fields	9.1 V/m (10 V/m) 80...1000 MHz IEC 801-3
Ambient Air Temperature for Operation	32…140 °F (0…60 °C)
Ambient Air Temperature for Storage	-40…185 °F (-40…85 °C)
Relative Humidity	95 % without condensation
Operating altitude	<= 16404.2 ft (5000 m)

Ordering and shipping details

Category	US1PC3118206
Discount Schedule	PC31
GTIN	3595861147553
Returnability	No
Country of origin	ID

Packing Units

Unit Type of Package 1	PCE
Number of Units in Package 1	1
Package 1 Height	3.54 in (9.000 cm)
Package 1 Width	7.09 in (18.000 cm)
Package 1 Length	10.24 in (26.000 cm)
Package 1 Weight	18.730 oz (531.000 g)
Unit Type of Package 2	S03
Number of Units in Package 2	6
Package 2 Height	11.81 in (30.000 cm)
Package 2 Width	11.81 in (30.000 cm)
Package 2 Length	15.75 in (40.000 cm)

Package 2 Weight	8.763 lb(US) (3.975 kg)

Contractual warranty

Warranty	18 months

Environmental Data

Schneider Electric aims to achieve Net Zero status by 2050 through supply chain partnerships, lower impact materials, and circularity via our ongoing “Use Better, Use Longer, Use Again” campaign to extend product lifetimes and recyclability.

Environmental Data explained >

How we assess product sustainability >

Environmental footprint

Environmental Disclosure	Product Environmental Profile

Use Better

Materials and Substances

Packaging made with recycled cardboard	Yes
Packaging without single use plastic	No
EU RoHS Directive	Pro-active compliance (Product out of EU RoHS legal scope)
SCIP Number	441d5619-6318-4bbf-ac83-96d05888ee7e
REACh Regulation	REACh Declaration
California proposition 65	WARNING: This product can expose you to chemicals including: Lead and lead compounds, which is known to the State of California to cause cancer and birth defects or other reproductive harm. For more information go to www.P65Warnings.ca.gov

Use Again

Repack and remanufacture

Circularity Profile	End of Life Information
Take-back	No
WEEE	The product must be disposed on European Union markets following specific waste collection and never end up in rubbish bins.

Dimensions Drawings

Standard Adapter on a Discrete VAC Base

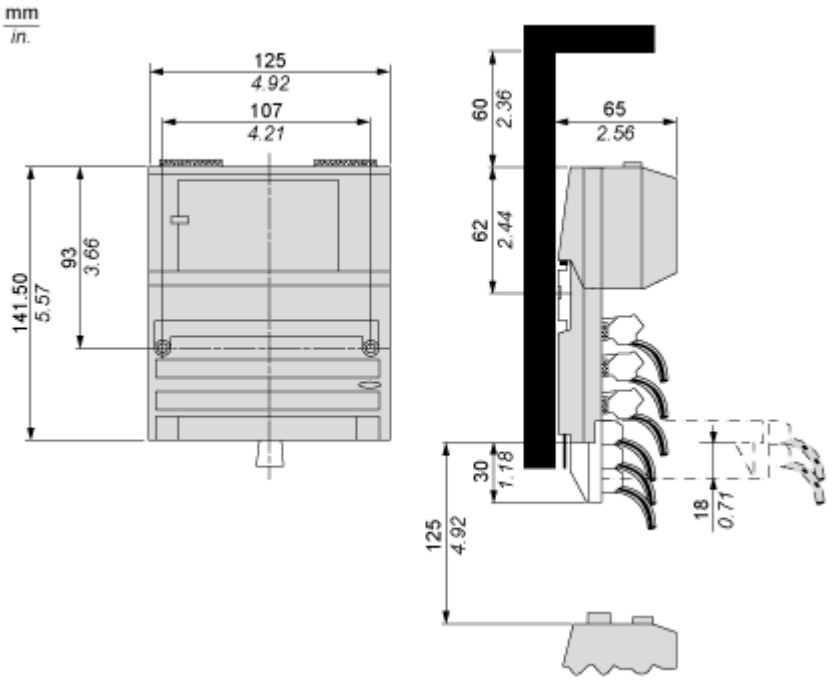

Mounting and Clearance

Mounting on a Wall

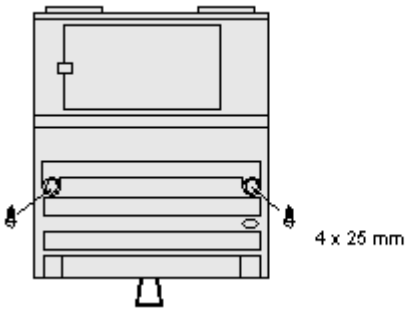

Connections and Schema

External Wiring Diagrams

2-Wire Device

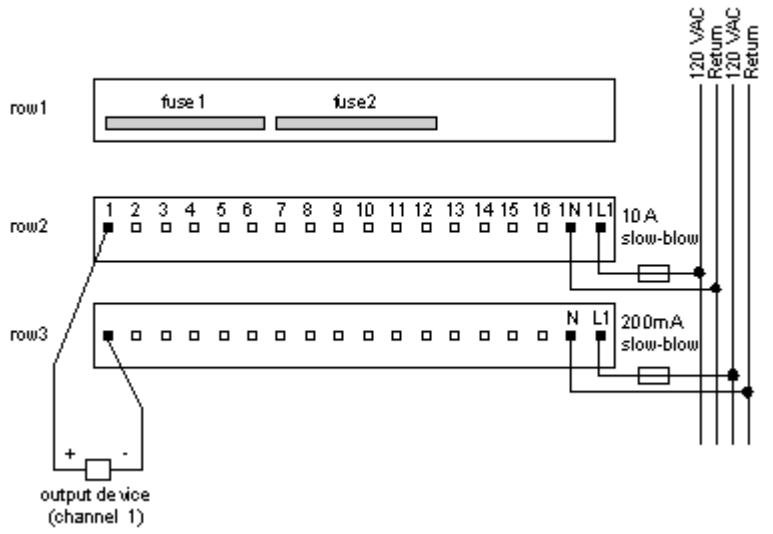

3-Wire Device

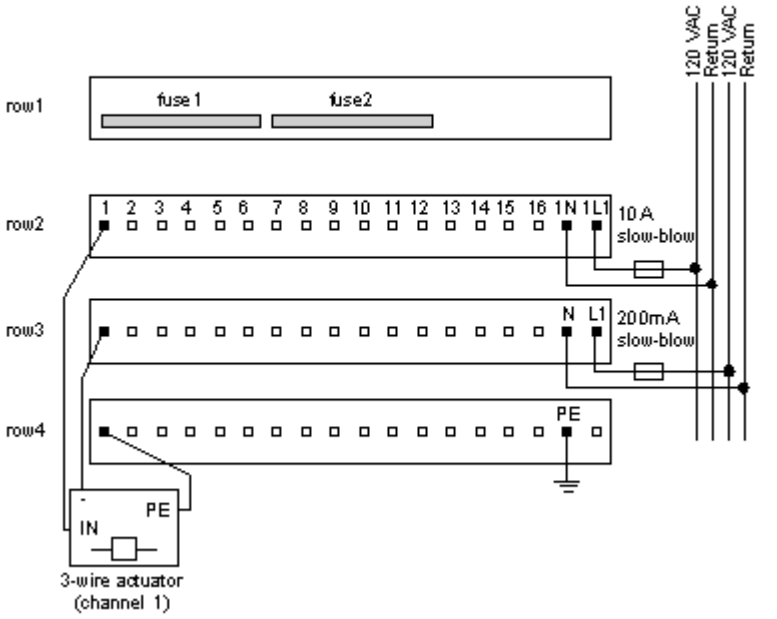

Internal Pin Connections
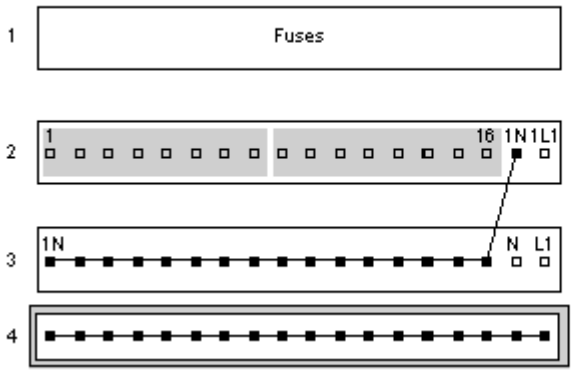
Rows 1 through 3 show the internal connections between terminals on the I/O base. Row 4 shows the internal connections on the optional busbar.