Product data sheet

Specifications

Wireless and batteryless package, Harmony XB5R, Wireless push button and configurable receiver with 10 colored caps, plastic, 22mm, 24...240V AC DC

XB5RFA02

Main

Range of product	Harmony XB5R
Product or component type	Wireless and batteryless package
Device short name	XB5R
Head material	Plastic
frequency	2405 MHz for transmitter 2405 MHz for receiver
emission class	5M00G7W
Antenna type	Omnidirectional

Complementary

Control type	Wireless and batteryless push-button Ø 22 mm assembled on fixing collar
Type of receiver	Programmable receiver (2 relays)
[Us] rated supply voltage	24...240 V AC/DC 50/60 Hz
Kit composition	1 transmitter 1 set of caps 1 receiver 1 fixing collars 1 diameter: 22 mm 1 push-button head diameter: 22 mm
Status LED	1 LED green for power ON 2 LEDs green for relay ON 2 LEDs green for function mode 1 LED green and yellow for reception signal
Communication port protocol	Zigbee conforming to IEEE 802.15.4
Max power consumption in W	1 mW
Number of channels	1
Modulation Technique	O-QPSK
Bandwidth	5 MHz
Antenna gain	0 dBi

Environment

Product certifications	UL CCC GOST CSA C-Tick
Marking	CE

Disclaimer: This documentation is not intended as a substitute for and is not to be used for determining suitability or reliability of these products for specific user applications

Standards	CSA C22.2 No 14 IEC 60947-5-1 UL 508 IEC 60947-1
Radio agreement	SRRC RSS ARIB T66 FCC ICASA ANATEL

Packing Units

Unit Type of Package 1	PCE
Number of Units in Package 1	1
Package 1 Height	9.300 cm
Package 1 Width	10.500 cm
Package 1 Length	10.800 cm
Package 1 Weight	207.000 g
Unit Type of Package 2	S03
Number of Units in Package 2	16
Package 2 Height	30.000 cm
Package 2 Width	30.000 cm
Package 2 Length	40.000 cm
Package 2 Weight	3.850 kg

Contractual warranty

Warranty	18 months

Environmental Data

Schneider Electric aims to achieve Net Zero status by 2050 through supply chain partnerships, lower impact materials, and circularity via our ongoing “Use Better, Use Longer, Use Again” campaign to extend product lifetimes and recyclability.

Environmental Data explained >

How we assess product sustainability >

Environmental footprint

Total lifecycle Carbon footprint	33
Environmental Disclosure	Product Environmental Profile

Use Better

Materials and Substances

Packaging made with recycled cardboard	Yes
Packaging without single use plastic	No
EU RoHS Directive	Pro-active compliance (Product out of EU RoHS legal scope)
SCIP Number	25b7f895-3732-43c8-9910-ef6005058640
REACh Regulation	REACh Declaration
California proposition 65	WARNING: This product can expose you to chemicals including: Nickel compounds, which is known to the State of California to cause cancer, and Di-isodecyl phthalate (DIDP), which is known to the State of California to cause birth defects or other reproductive harm. For more information go to www.P65Warnings.ca.gov

Use Again

Repack and remanufacture

End of life manual availability	End of Life Information
Take-back	No
WEEE Label	The product must be disposed on European Union markets following specific waste collection and never end up in rubbish bins

Dimensions Drawings

Programmable Receiver

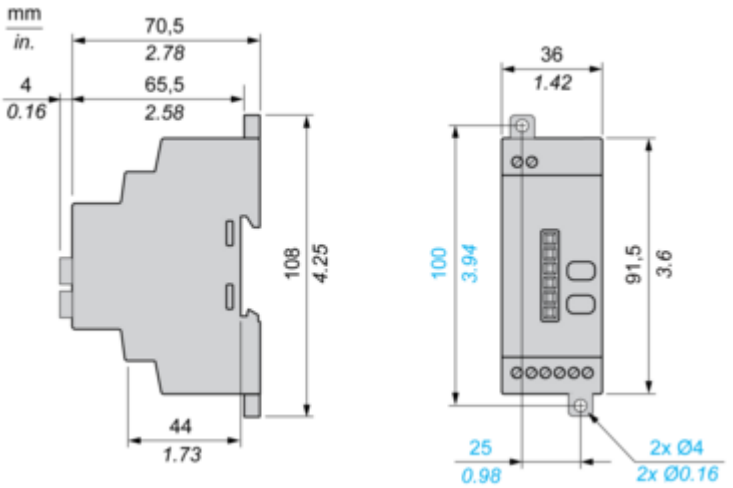

Wireless and Batteryless Pushbutton - Transmitter

With Plastic Pushbutton without Cap

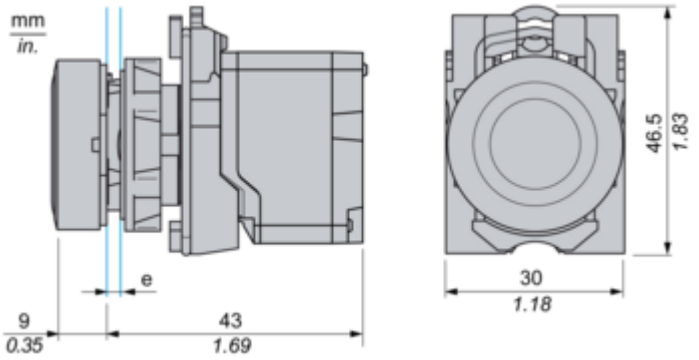

e: panel thickness 1 to 6 mm / 0.039 to 0.24 in.

Mounting and Clearance

Receiver Clearance

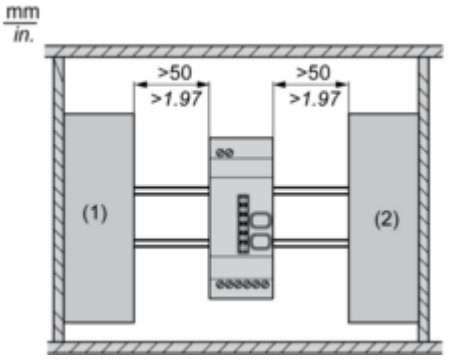

(1) Drive
(2) Power Supply or PLC

Receiver Mounting

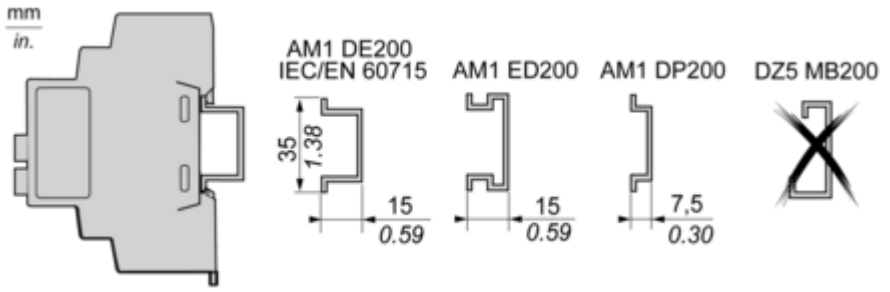

Connections and Schema

Programmable Receiver

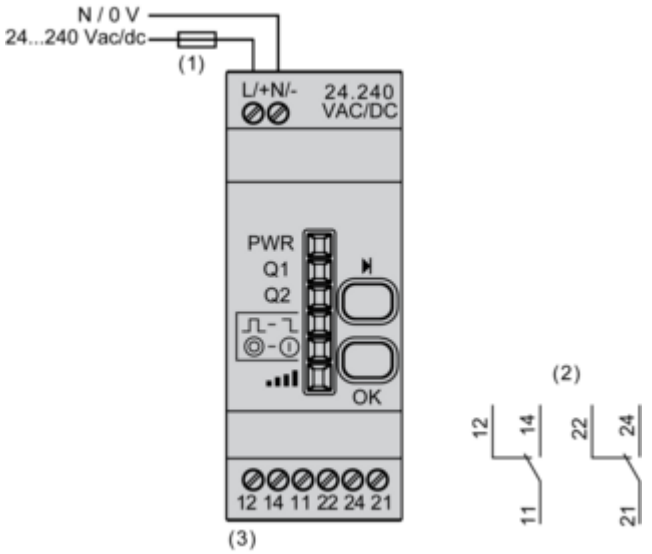

(1) 500 mA
(2) Output contacts
(3) Imax = 3 A

Technical Illustration

Dimensions

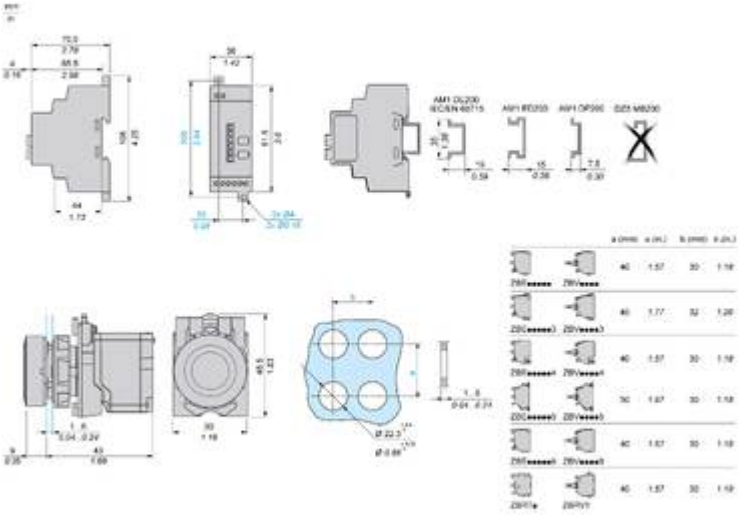

Technical Illustration
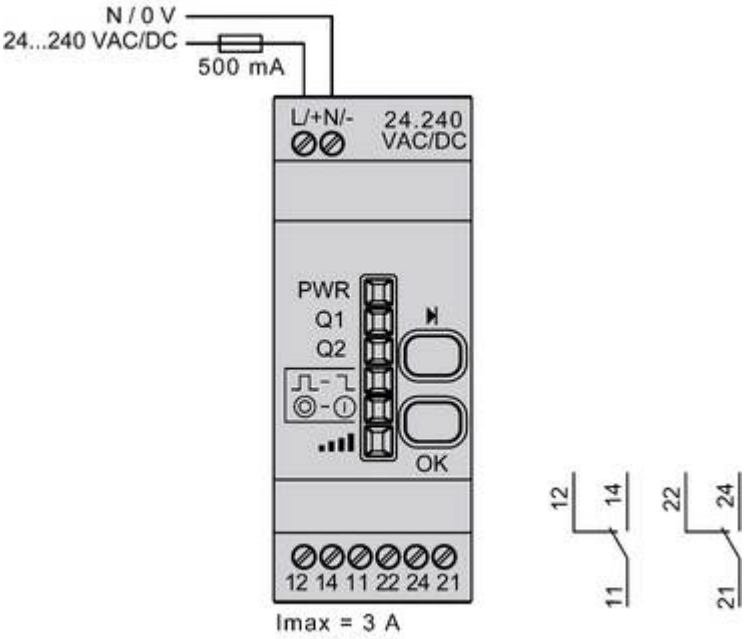
Wiring diagram