Product data sheet

Specifications

Transformer, dry type, DOE 2016, 300kVA, 3 phase, 600V delta primary, 208Y/120V secondary, 25J, 150C rise

EX300T65H

Product availability: Non-Stock - Not normally stocked in distribution facility

Main

Range of Product	Square D
Product or Component Type	Transformer
Device short name	DOE 2016
Transformer type	Energy efficient
Device Application	Low voltage electrical distribution

Complementary

Box number	25J
Phase	3 phase
Rated operational power in VA	300 kVA
Network Frequency	60 Hz
type of cooling	Natural convection
Primary Voltage	600 V delta
Number of tap-offs	2 2.5 % FCAN 4 2.5 % FCBN
Secondary voltage	208Y/120 V
Coil Material	Aluminium
Basic IMP level (BIL)	10 kV
Temperature Rise	150 °C 220 °C insulated
DOE Efficiency	99.12 % at 35 % load factor , 167 °F (75.0 °C)
Sound Level	6 dB NEMA ST-20 49 dB
%IZ	5.3 %
%IX	0.0507 %
X/R Ratio	3.33
Let Through Current	15.7 kA
Transformer Losses	479.0 no load (core loss) 4564.0 load loss (coil loss)
Transformer BTU/HR	2063.546049320928 16.6 % 2607.7295234999997 0.25 % 5527.67004 0.5 % 10394.237567499998 0.75 % 17207.432106 1.0 %

Price is “List Price” and may be subject to a trade discount – check with your local distributor or retailer for actual price.

Disclaimer: This documentation is not intended as a substitute for and is not to be used for determining suitability or reliability of these products for specific user applications

Height	57.5 in (1461 mm)
Depth	32.8 in (832 mm)
Width	40.08 in (1018 mm)
Net Weight	1860.00 lb(US) (843.68 kg)
Mounting support	Floor Floor, with 7400FMB
Degree of protection	UL type 1 UL type 2, with 7400DS25J UL type 3R, with 7400WS25J
Electrical connection	4 Hole Nema Pad primary 0.4 in (11.1 mm) 6 Hole Nema Pad secondary 0.4 in (11.1 mm) 8 Hole Nema Pad sec - XO 0.4 in (11.1 mm)

Environment

Ambient air temperature for operation	104 °F (40 °C)
Average ambient air temperature for operation	30 °C
Standards	UL 1561 CSA C22.2 No 47 NEMA ST-20

Ordering and shipping details

Category	US1PE2X16501
Discount Schedule	PE2X
GTIN	785901003250
Returnability	No
Country of origin	MX

Packing Units

Unit Type of Package 1	PCE
Nbr. of units in pkg.	1
Package 1 Height	59.00 in (149.86 cm)
Package 1 Width	43.00 in (109.22 cm)
Package 1 Length	35.00 in (88.9 cm)
Package weight(Lbs)	2367.37 lb(US) (1073.82 kg)

Environmental Data

Schneider Electric aims to achieve Net Zero status by 2050 through supply chain partnerships, lower impact materials, and circularity via our ongoing “Use Better, Use Longer, Use Again” campaign to extend product lifetimes and recyclability.

Environmental Data explained >

How we assess product sustainability >

Environmental footprint

Carbon footprint (kg CO2 eq, Total Life cycle)	**68019**
Environmental Disclosure	**Product Environmental Profile**

Use Better

Materials and Substances

Packaging made with recycled cardboard	**Yes**
Packaging without single use plastic	**Yes**
EU RoHS Directive	**Compliant**
REACh Regulation	**REACh Declaration**
California proposition 65	**WARNING: This product can expose you to chemicals including: Phenyl Glycidyl Ether, which is known to the State of California to cause cancer and birth defects or other reproductive harm. For more information go to www.P65Warnings.ca.gov**
Halogen content performance	**Halogen free plastic parts product**
PVC free	**Yes**

Use Again

Repack and remanufacture

Circularity Profile	**No need of specific recycling operations**
Take-back	**No**

Dimensions Drawings

Approximate Dimensions

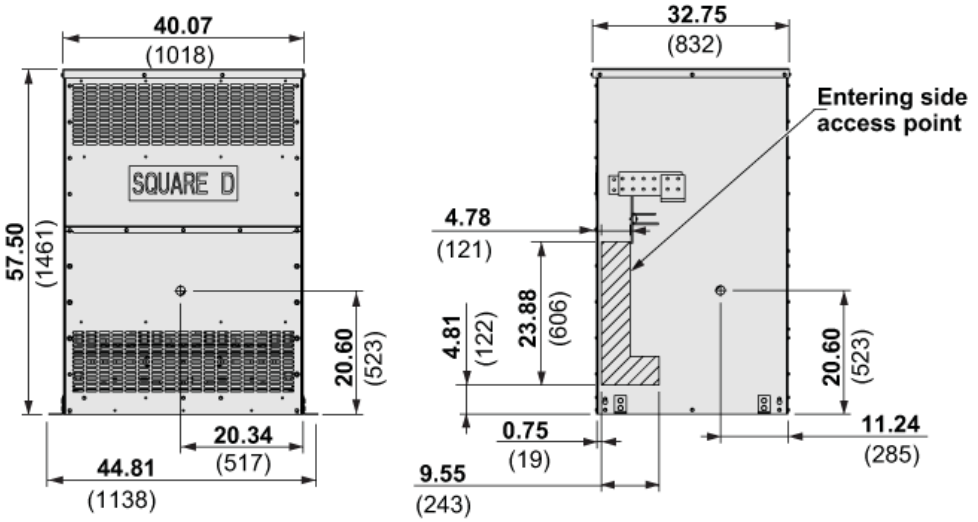

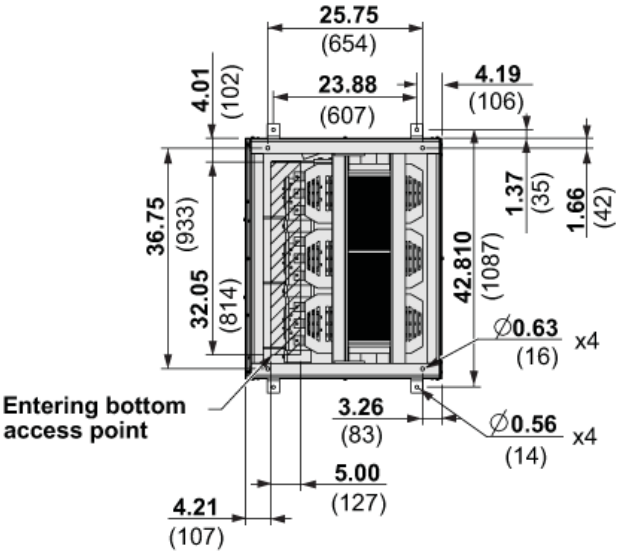

in.
(mm)