Product data sheet

Specifications

Safety switch, heavy duty, non fusible, 600A, 600VAC/VDC, 3 poles, 500HP, NEMA 4, 4X, 5, 304 steel

CHU366DS

Product availability: Non-Stock - Not normally stocked in distribution facility

Main

Product	Single Throw Safety Switch
Disconnect Type	Non-fusible disconnect
Number of Poles	3
Electrical Connection	Lugs
Duty Rating	Heavy duty

Complementary

Line Rated Current	600 A
Factory Installed Neutral	None
Mounting Type	Surface
Voltage Rating	600 V AC/DC
Motor power hp	200 hp at 240 V AC 50-60 Hz for 3 phase motors 400 hp at 480 V AC 50-60 Hz for 3 phase motors 500 hp at 600 V AC 50-60 Hz for 3 phase motors 50 hp at 250 V DC 50 hp at 600 V DC
Wire Size	AWG 3/0...500 kcmil copper or aluminium
Tightening torque	375 lbf.in (42.4 N.m) (AWG 3/0...500 kcmil)
Height	46.25 in (1174.75 mm)
Width	26.25 in (666.75 mm)
Depth	10.13 in (257.30 mm)

Environment

Certifications	CSA
Enclosure Rating	NEMA 4/4X stainless steel 304

Ordering and shipping details

Category	US10DE100153
Discount Schedule	0DE1
GTIN	785901414292
Returnability	No
Country of origin	MX

Price is “List Price” and may be subject to a trade discount – check with your local distributor or retailer for actual price.

Disclaimer: This documentation is not intended as a substitute for and is not to be used for determining suitability or reliability of these products for specific user applications

Packing Units

Unit Type of Package 1	PCE
Nbr. of units in pkg.	1
Package 1 Height	46.26 in (117.5 cm)
Package 1 Width	26.26 in (66.7 cm)
Package 1 Length	10.12 in (25.7 cm)
Package weight(Lbs)	155.0005 lb(US) (70.307 kg)

Environmental Data

Schneider Electric aims to achieve Net Zero status by 2050 through supply chain partnerships, lower impact materials, and circularity via our ongoing “Use Better, Use Longer, Use Again” campaign to extend product lifetimes and recyclability.

Environmental Data explained

How we assess product sustainability

Environmental footprint

Carbon footprint (kg CO2 eq, Total Life cycle)	1939
Environmental Disclosure	Product Environmental Profile

Use Better

Materials and Substances

Packaging made with recycled cardboard	Yes
Packaging without single use plastic	No
EU RoHS Directive	Compliant with Exemptions
REACh Regulation	REACh Declaration
California proposition 65	WARNING: This product can expose you to chemicals including: Lead and lead compounds, which is known to the State of California to cause cancer and birth defects or other reproductive harm. For more information go to www.P65Warnings.ca.gov
Halogen content performance	Halogen free plastic parts product
PVC free	Yes

Use Again

Repack and remanufacture

Circularity Profile	No need of specific recycling operations
Take-back	No

Technical Illustration

Dimensions

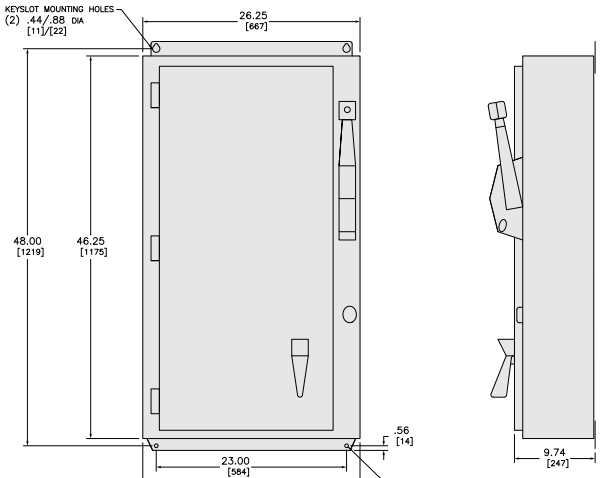

TYPE 4,4X,5 AND 12
NO KNOCKOUTS

CATALOG NUMBER	
TYPE 12	TYPE 4,4X,5 STAINLESS STEEL
CH326NAWK CH366AWK CH366NAWK CHU366AWK	CH326NDS CH366DS CH366NDS CHU366DS

ALL DIMENSIONS ARE APPROXIMATE.
REFER TO TECHNICAL DRAWINGS AND DOCUMENTATION FOR COMPLETE INFORMATION.

Technical Illustration

Wiring diagram

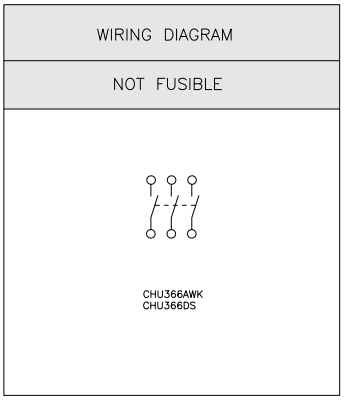

REFER TO TECHNICAL DRAWINGS AND DOCUMENTATION FOR COMPLETE INFORMATION.