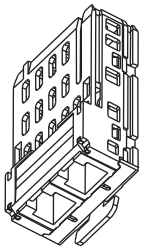

VW3A3601 / VW3A3608
VW3A3616 / VW3A3627
VW3A3619 / VW3A3647

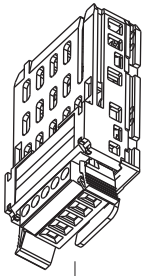

VW3A3609
VW3A3628
VW3A3725
VW3M3301

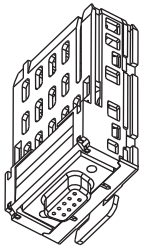

VW3A3607
VW3A3618

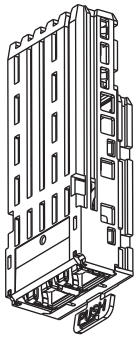

VW3A3720
VW3A3721
VW3M3308
VW3A3530D

DANGER

HAZARD OF ELECTRIC SHOCK, EXPLOSION, OR ARC FLASH

- Only appropriately trained persons who are familiar with and fully understand the contents of the present manual and all other pertinent product documentation and who have received all necessary training to recognize and avoid hazards involved are authorized to work on and with this equipment.
- Installation, adjustment, repair and maintenance must be performed by qualified personnel.
- Verify compliance with all local and national electrical code requirements as well as all other applicable regulations with respect to grounding of all equipment.
- Before performing work and/or applying voltage on the equipment, follow the instructions given in the appropriate installation manual.

Failure to follow these instructions will result in death or serious injury.

Electrical equipment should be installed, operated, serviced, and maintained only by qualified personnel.
No responsibility is assumed by Schneider Electric for any consequences arising out of the use of this product.
© 2023 Schneider Electric. All Rights Reserved.

Option Module		Altivar Machine			Altivar Process		Altivar Soft Starter	Lexium	MV Drive
		ATV32	ATV320	ATV340 (1)	ATV600 (2)	ATV900	ATS480	LXM32	ATV6000
		Device version ≥ *(Option Module version ≥)*							
VW3A3601	EtherCAT	V1.2IE03 (V1.1IE08)	V2.7IE23 (V1.9IE09)	V1.1IE02 (V1.11IE01)		V1.2IE02 (V1.8IE05)		V1.4IE06 (V1.1IE08)	✓
VW3A3607	PROFIBUS DP	V1.1IE01 (V1.5IE01)	V2.7IE23 (V1.12IE01)	V1.1IE02 (V1.12IE01)	V1.1IE01 (V1.9IE01)	V1.1IE01 (V1.10IE01)	V1.1IE01 (V1.16IE08)	V1.0IE03 (V1.3IE01)	✓
VW3A3608 VW3A3618 VW3A3628	CANopen	V1.2IE03 (V1.1IE01)	V2.7IE23 (V1.1IE01)	V1.1IE02 (V1.1IE01)	V1.1IE01 (V1.1IE01)	V1.1IE01 (V1.1IE01)	V1.1IE01 (V1.1IE01)	V1.0IE03 (✓)	✓
VW3A3609	DeviceNet	V1.1IE01 (V1.1IE01)	V2.7IE23 (V1.8IE01)	V1.1IE02 (V1.8IE01)	V1.1IE01 (V1.5IE05)	V1.1IE01 (V1.5IE05)			✓
VW3A3616	Ethernet TCP/IP	V1.1IE01 (V1.2IE01)	V2.7IE23 (V1.EIE01)					V1.0IE03 (V1.1IE31)	
VW3A3619	POWERLINK	V1.5IE08 (V1.0IE08)	V2.7IE23 (V1.0IE08)	V1.5IE10 (V1.1IE04)	V2.2IE24 (V1.1IE04)	V1.8IE14 (V1.1IE04)			
VW3A3627	PROFINET	V1.8IE11 (V1.0IE15)	V2.7IE23 (V1.6IE01)	V1.1IE02 (V1.6IE01)	V1.1IE01 (V1.3IE01)	V1.1IE01 (V1.3IE01)			✓
VW3A3647	PROFINET + S2 Redundancy				V3.8 (≥V3.0IE20)	V3.9 (≥V3.0IE20)			
VW3A3720	Ethernet IP / Modbus TCP				V1.5IE11 (V1.8IE12) (3)		V1.1IE01 (V2.1IE00)		
VW3A3721	Ethernet IP / Modbus TCP + MultiDrive Link				V1.6IE12 (V1.8IE13) (3)				
VW3A3725	BACnet MS/TP				V1.7IE16 (V1.1IEXX)				
VW3M3301	DeviceNet							≥V1.0IE03 ≤V1.20IE05 (V1.0)	
VW3M3308	PROFINET							V1.24IE03 (V1.0IE11)	
VW3A3530D	ATV dPAC Module			For the Altivar Firmware Version, contact your Schneider Electric Customer Care Center on ***www.se.com/CCC***					

(1) Fieldbus modules can not be used on the ATV340••••N4S and ATV340••••N4E ≤ 22kW. For more information, see the ATV340 Installation Manual **(NVE61069)**.
(2) ATV610 is compatible only with VW3A3607 PROFIBUS DP fieldbus module.
(3) Drive version ≥ V2.2IE24 is only compatible with module version ≥ V1.15IE18.

ATV320
ATV32

Mounting

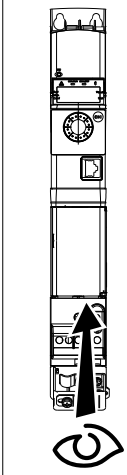

1)

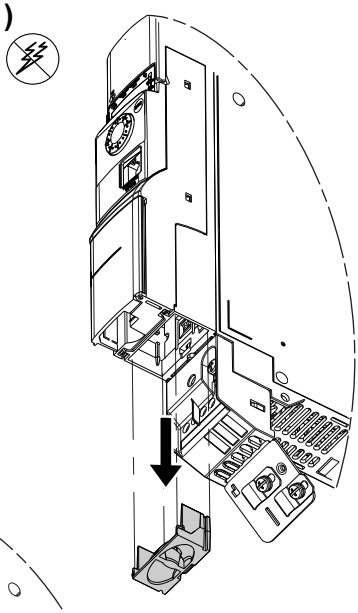

2)

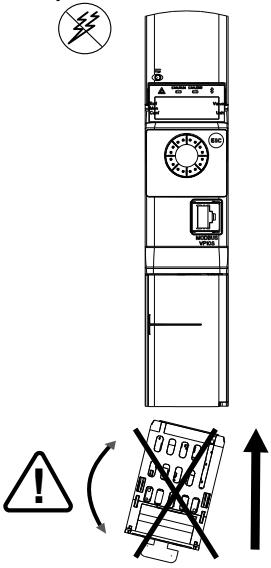

3)

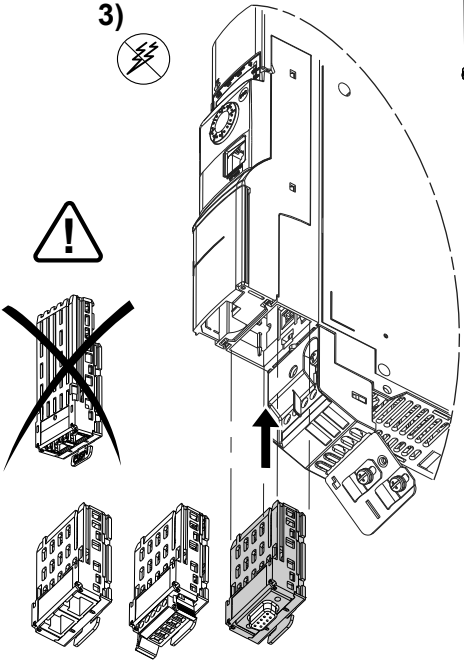

4)

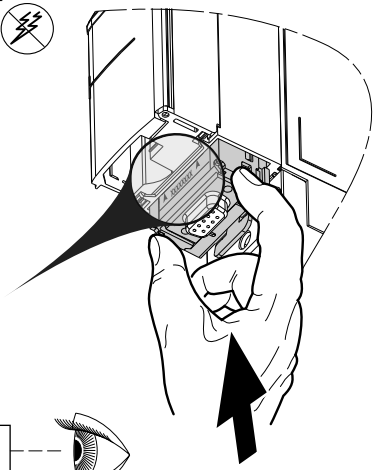

5)

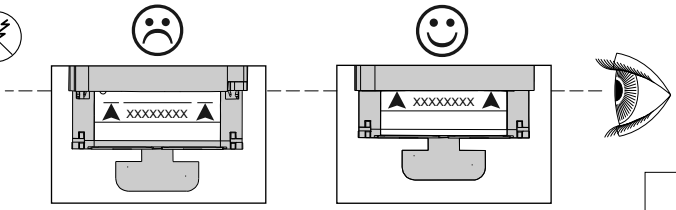

www.se.com

ATV320
ATV32

Removing

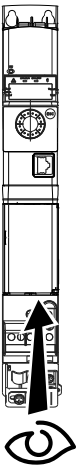

1)

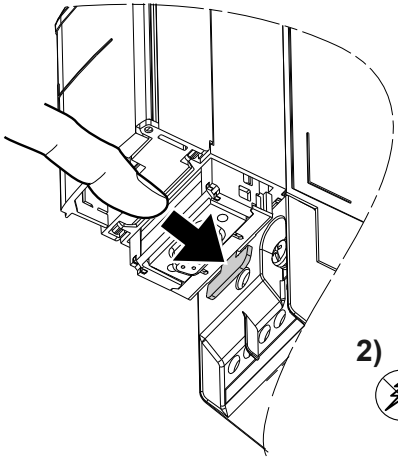

2)

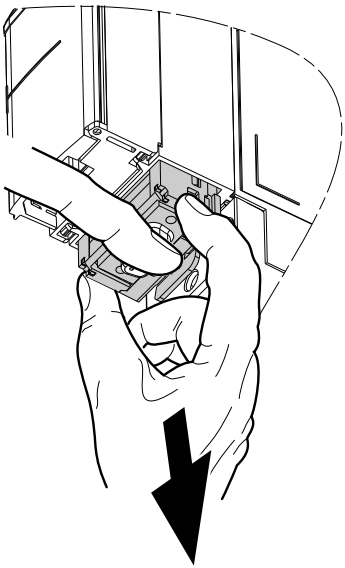

3)

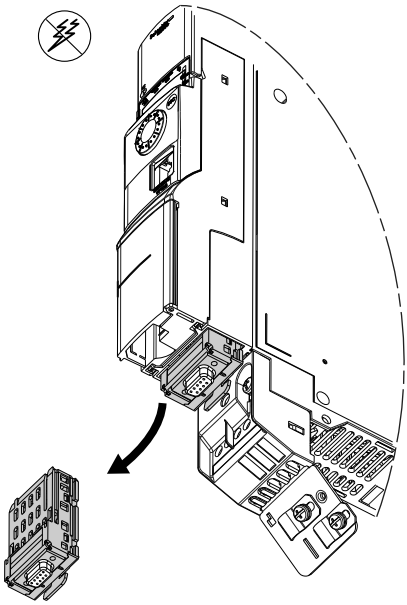

ATV320

Mounting

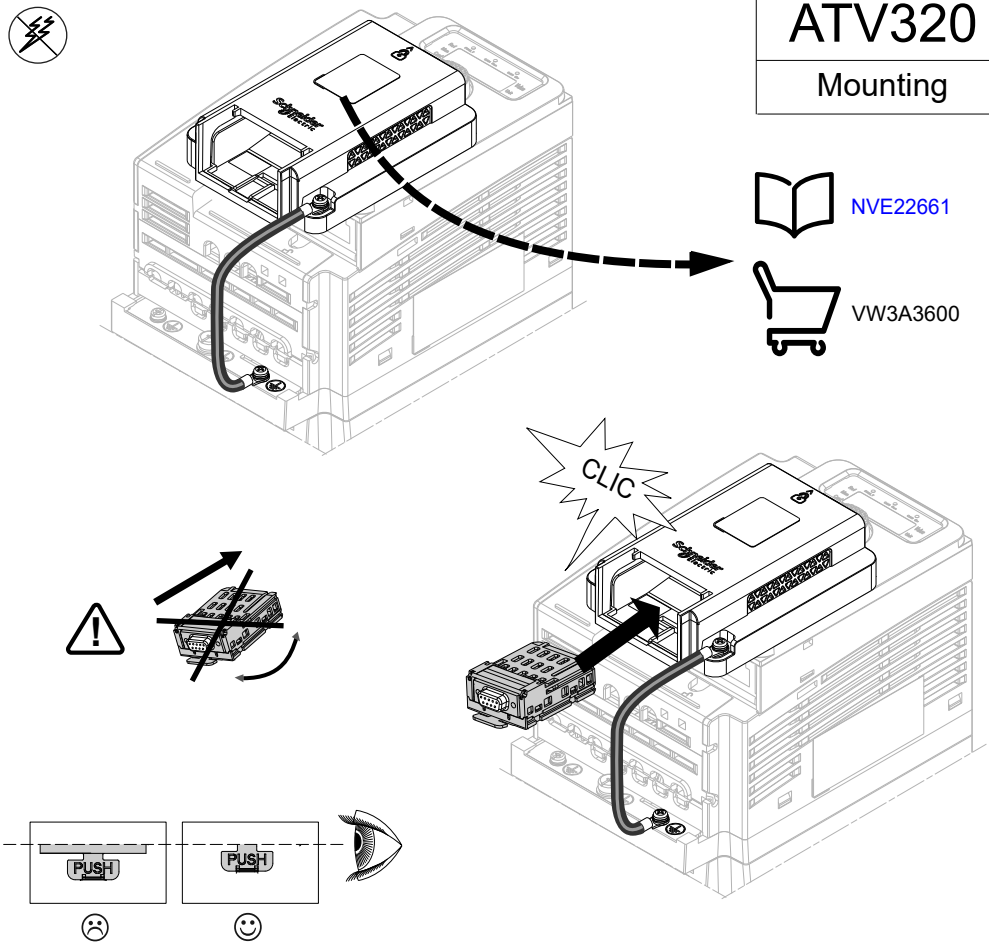

Removing

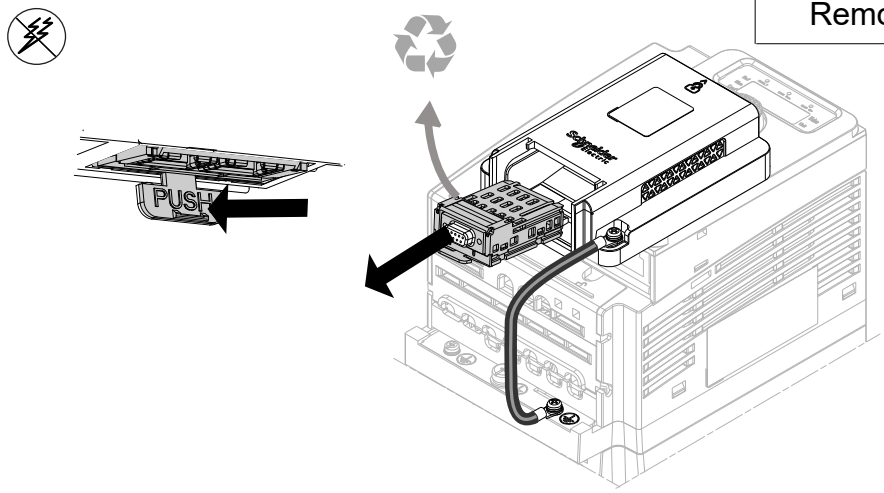

LXM32M
ATV340

Mounting

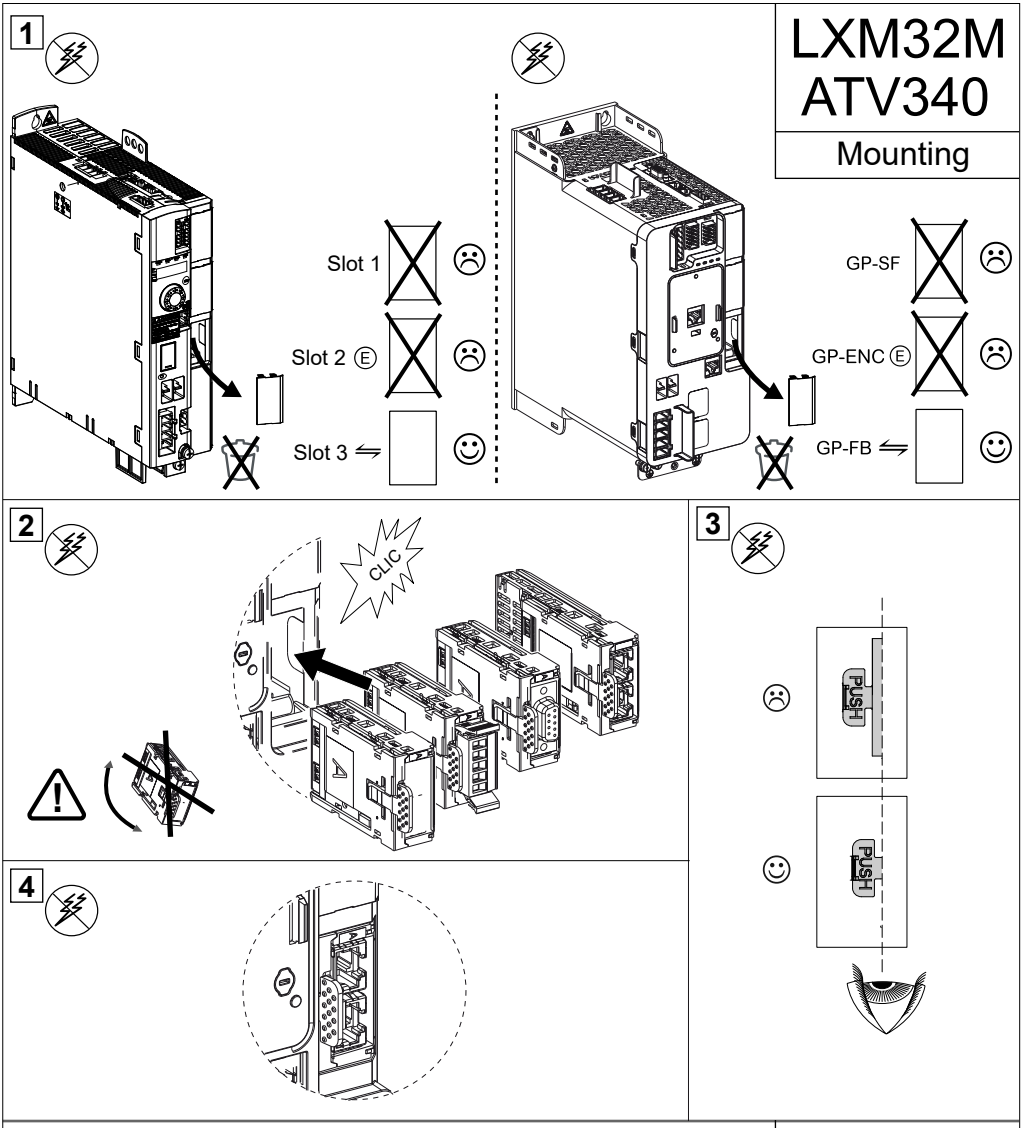

Removing

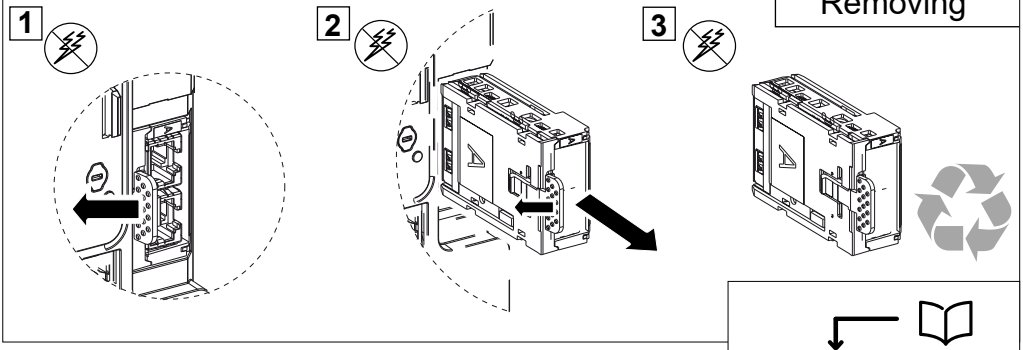

www.se.com

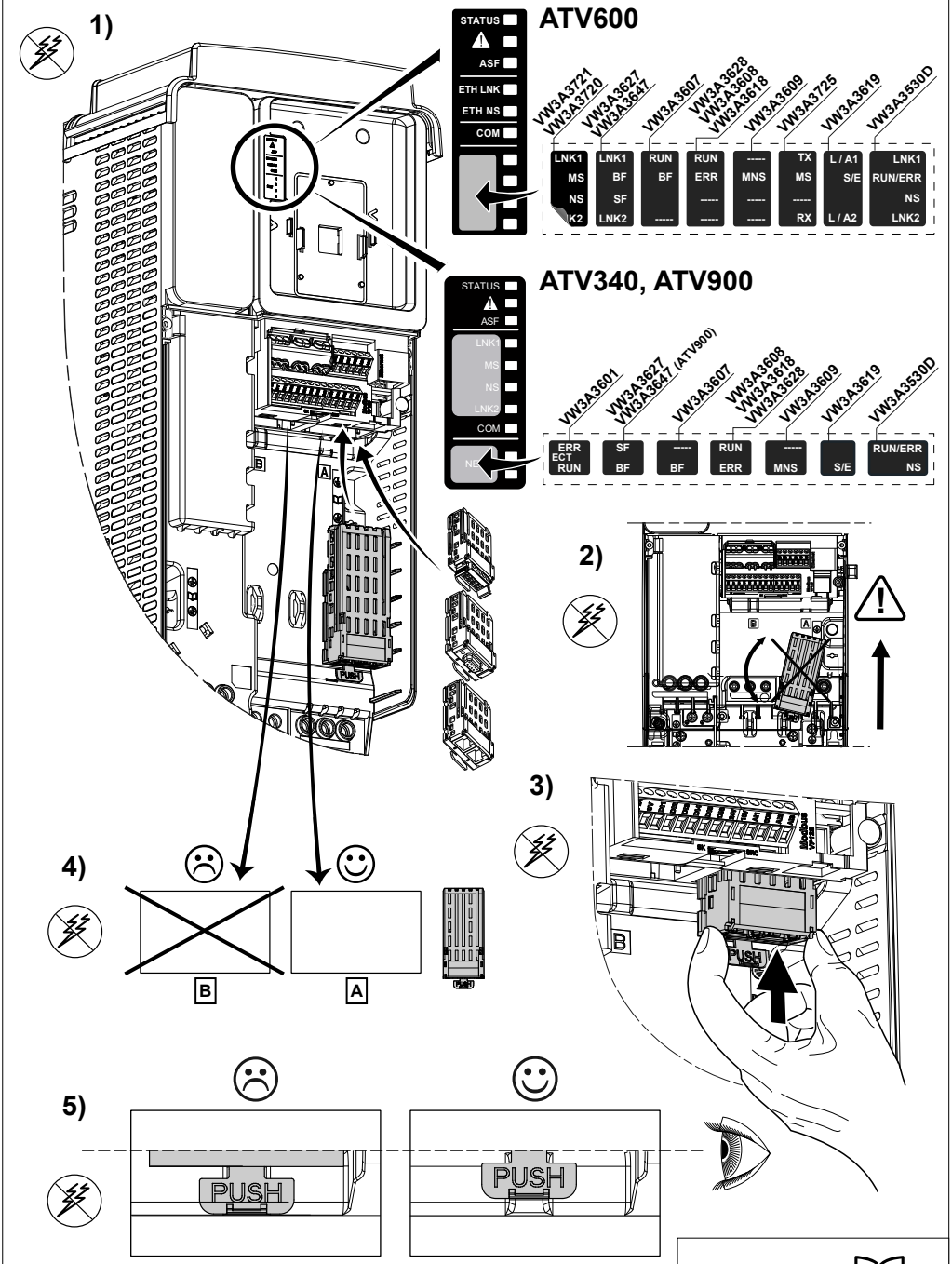
1)
ATV600
STATUS
ASF
ETH LNK
ETH NS
COM
VW3A3721
VW3A3720
VW3A3627
VW3A3647
VW3A3607
VW3A3628
VW3A3608
VW3A3618
VW3A3609
VW3A3725
VW3A3619
VW3A3530D
LNK1 MS NS LNK2
LNK1 BF SF LNK2
RUN BF
RUN ERR
----- MNS
TX MS RX
L / A1 S/E L / A2
LNK1 RUN/ERR NS LNK2
ATV340, ATV900
STATUS
ASF
LNK1
MS
NS
LNK2
COM
VW3A3601
VW3A3627
VW3A3647 (ATV900)
VW3A3607
VW3A3608
VW3A3618
VW3A3628
VW3A3609
VW3A3619
VW3A3530D
ERR ECT RUN
SF BF
----- BF
RUN ERR
----- MNS
S/E
RUN/ERR NS
B
A
PUSH
2)
3)
4)
5)
PUSH

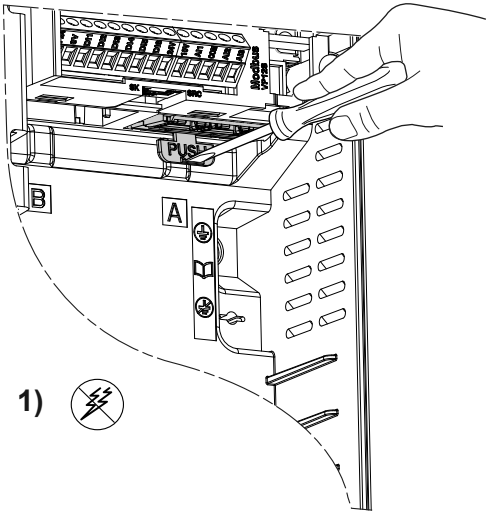

1)

2)

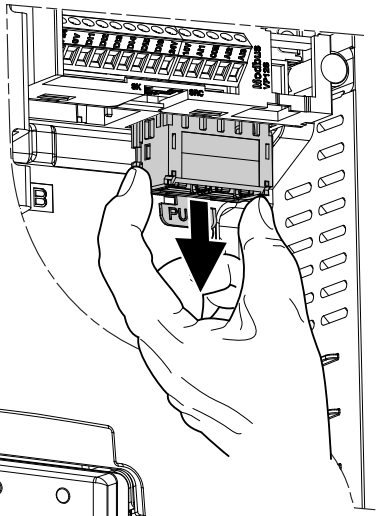

3)

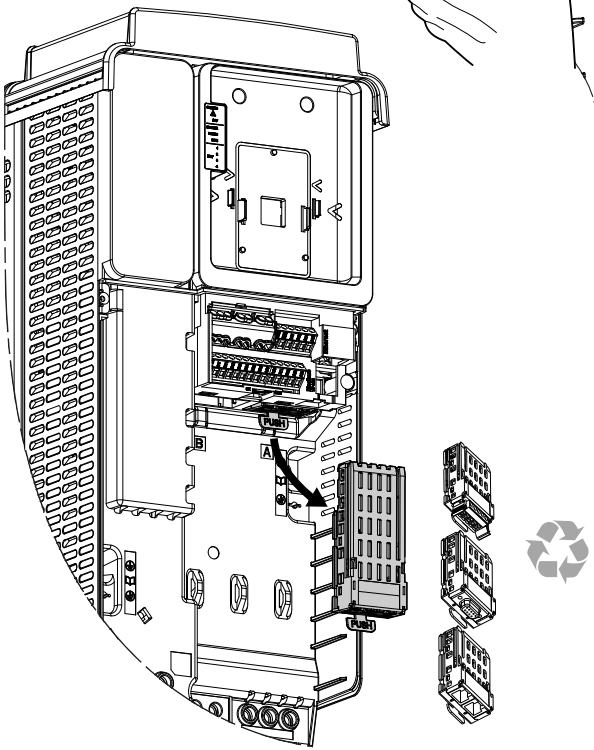

1)

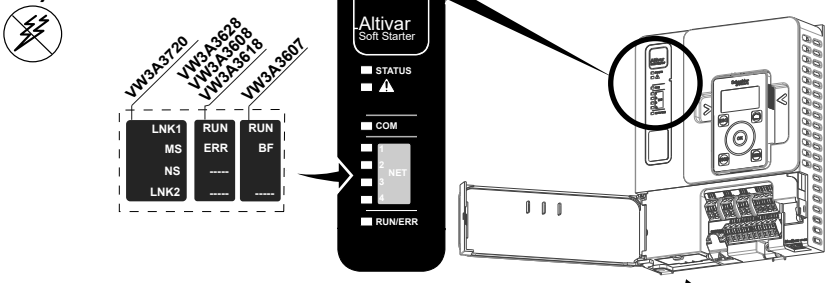
VW3A3720
VW3A3628
VW3A3608
VW3A3618
VW3A3607
LNK1
MS
NS
LNK2
RUN
ERR
RUN
BF
Altivar
Soft Starter
STATUS
COM
NET
RUN/ERR

2)

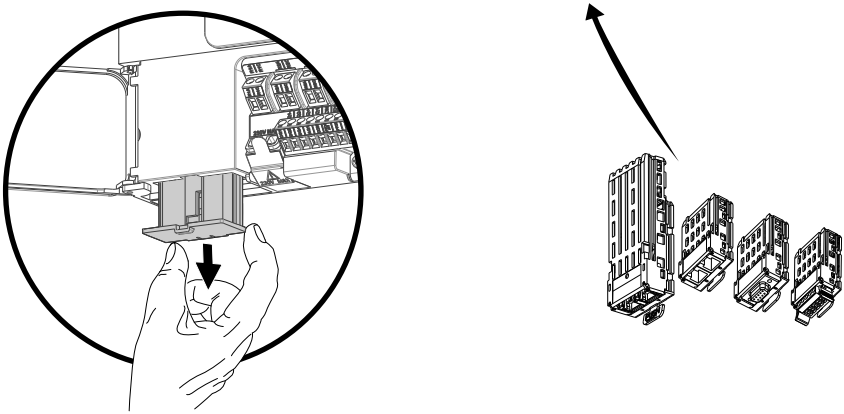

3)

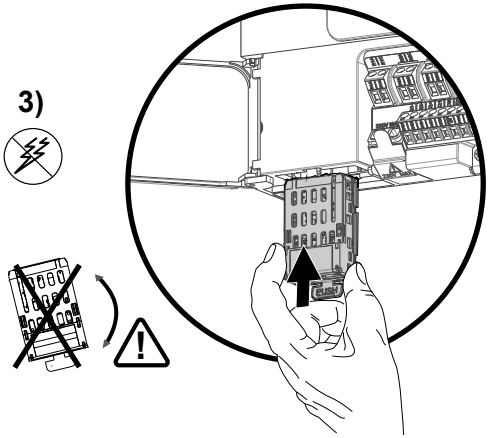

4)

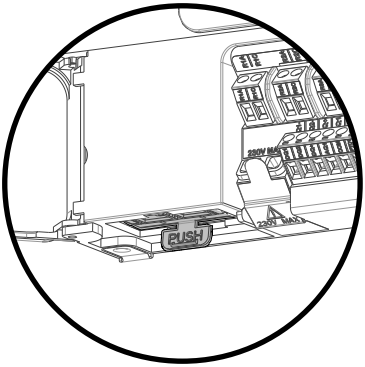
PUSH

5)

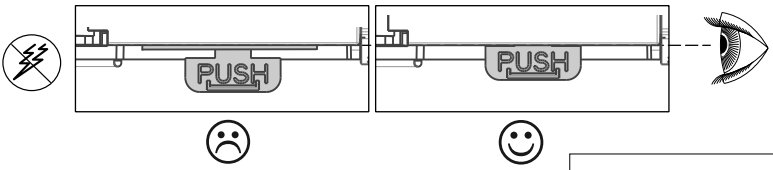
PUSH
PUSH

1)

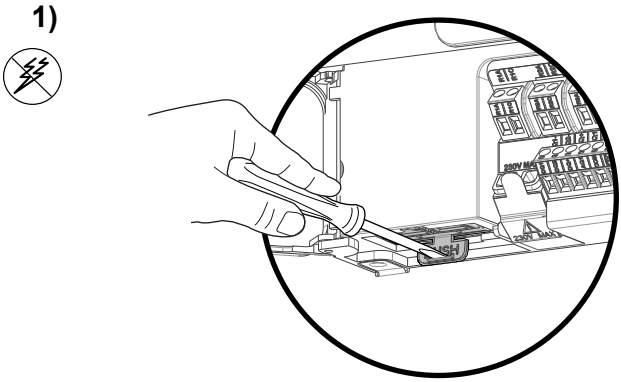

2)

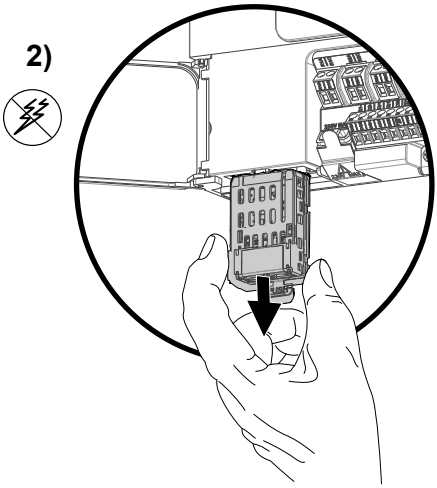
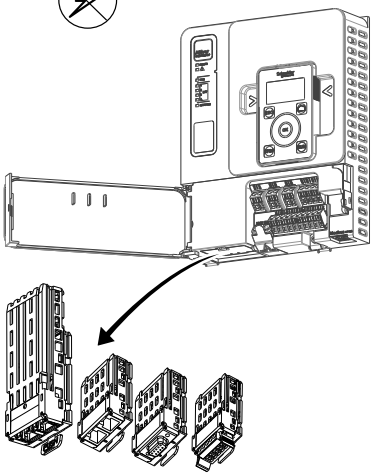
3)