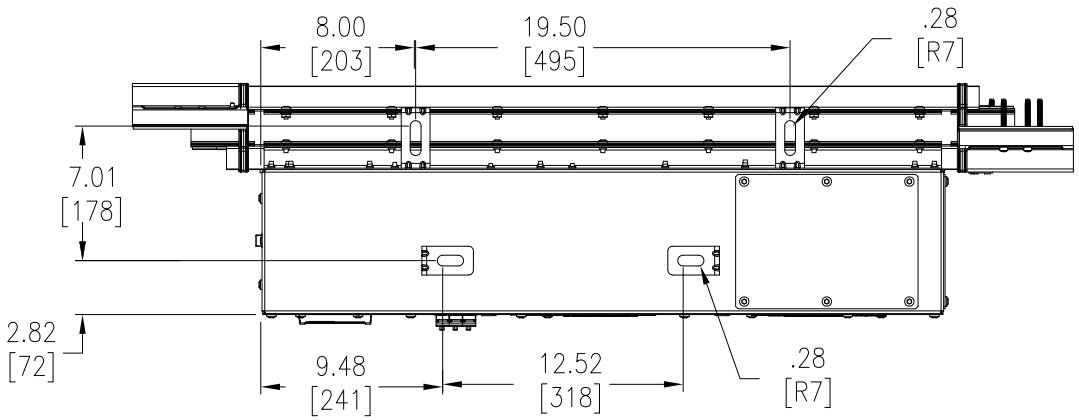

TOP VIEW

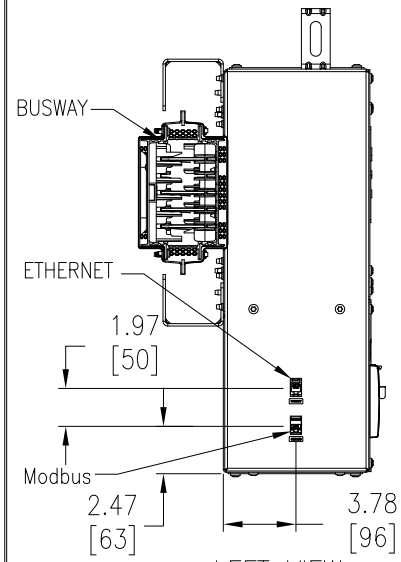

LEFT VIEW

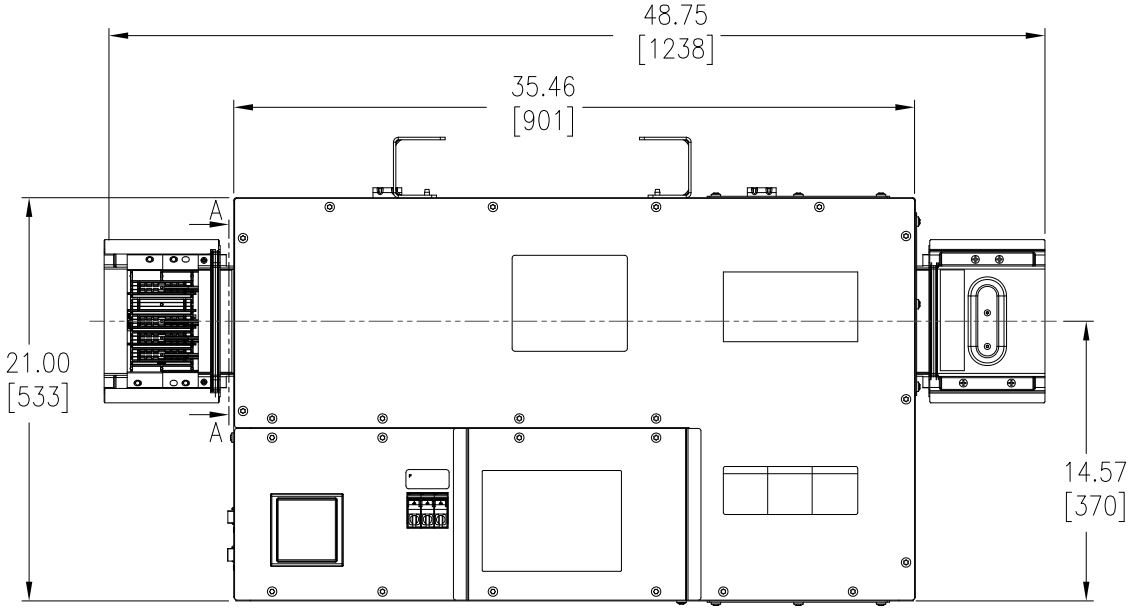

FRONT VIEW

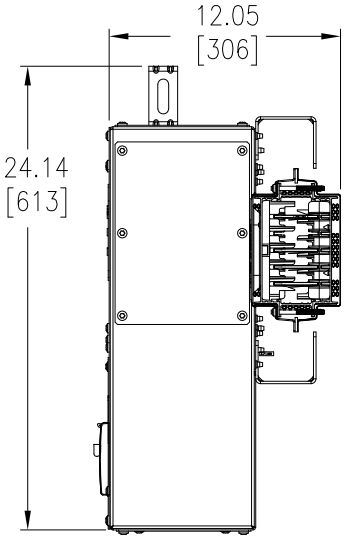

RIGHT VIEW

Section–AA(Busway size)

400A

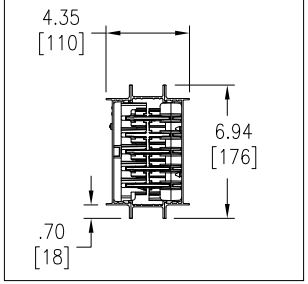

NOTES:
1. COMPLY WITH ALL APPLICABLE NATIONAL, STATE AND LOCAL CODES.
2. REFER TO PRODUCT MANUALS PRIOR TO INSTALLATION AND SITE PREPARATION WORK FOR FURTHER DETAILS. ONLY TRAINED ELECTRICIAN MUST PERFORM WORK ON THIS EQUIPMENT.
3. TURN OFF POWER TO BUSWAY BEFORE INSTALLING, REMOVING, OR WORKING ON THIS EQUIPMENT.
4. DO NOT INSTALL VERTICALLY, POWERBUS IS NOT SUITABLE FOR VERTICAL MOUNTING.
5. PROVIDE SUFFICIENT HORIZONTAL AND VERTICAL CLEARANCE FROM WALLS AND CEILINGS TO PROVIDE EASY ACCESS TO JOINTS AND SUFFICIENT ROOM FOR TAP OFF UNIT INSTALLATION.
6. ENSURE THAT ALL JOINT CONTACT SURFACES ARE FREE OF CONTAMINANTS.
7. VERIFY THAT THE SYSTEM PHASING MATCHES THE BUSWAY PHASING.
8. ALL DIMENSIONS ARE IN INCHES [MILLIMETERS]
9. WEIGHT OF THE UNIT IS 120.0lbs [54.4kg]

PBCF4A400ATBM

THIS DRAWING AND SPECIFICATIONS HEREIN ARE THE PROPERTY OF SCHNEIDER ELECTRIC AND SHALL NOT BE COPIED, REPRODUCED OR USED IN WHOLE OR IN PART, AS THE BASIS FOR THE MANUFACTURE OR SALE OF ITEMS WITHOUT WRITTEN PERMISSION FROM SCHNEIDER ELECTRIC. THIS DRAWING IS BASED UPON LATEST AVAILABLE INFORMATION AND IS SUBJECT TO CHANGE WITHOUT NOTICE.

Schneider Electric

TITLE: iBusway for Data Center System POWER FEED UNITS 3PHASE,400A,600V WITH METERING,MAIN MECHANICAL-1	DWG NO:	PBCF4A400ATB		REV. 0
	DRAWN BY:	K.NAGENDRA	06-AUG-14	THIRD ANGLE PROJECTION
	ENGINEER:	NARAYAN Nr	06-AUG-14	
PROJECT: DRAWINGS SHEET 1 OF 6	APPROVED BY:	AL WARNER	06-AUG-14	

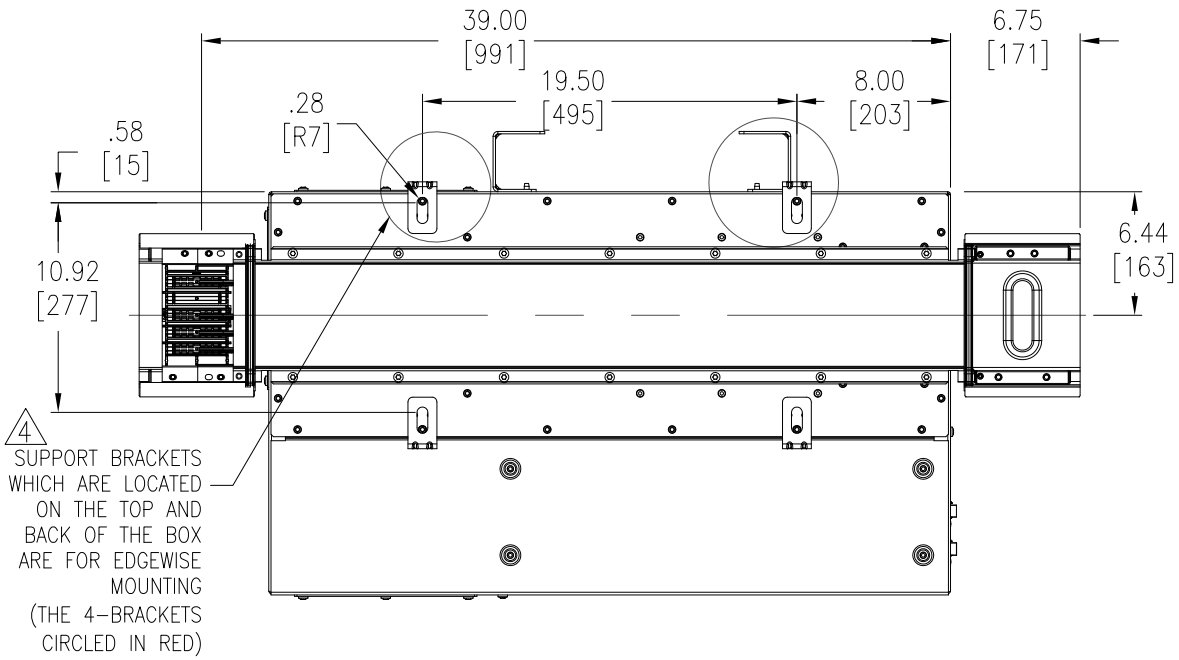

REAR VIEW

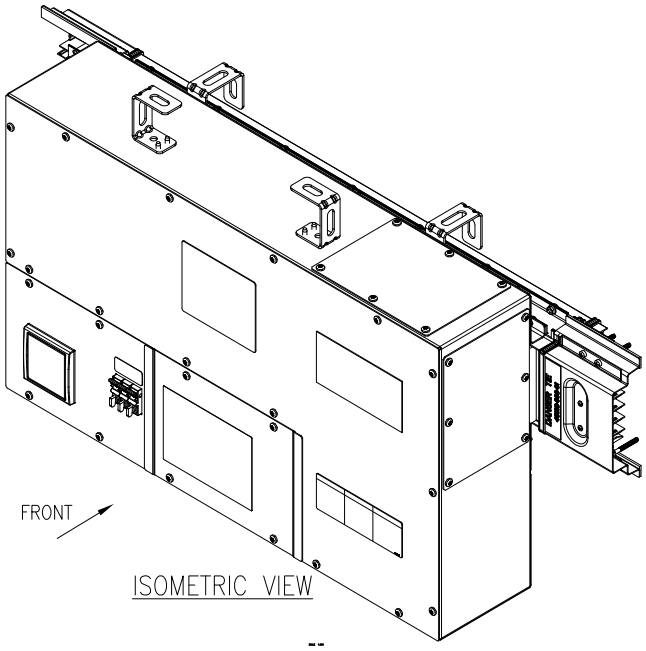

ISOMETRIC VIEW

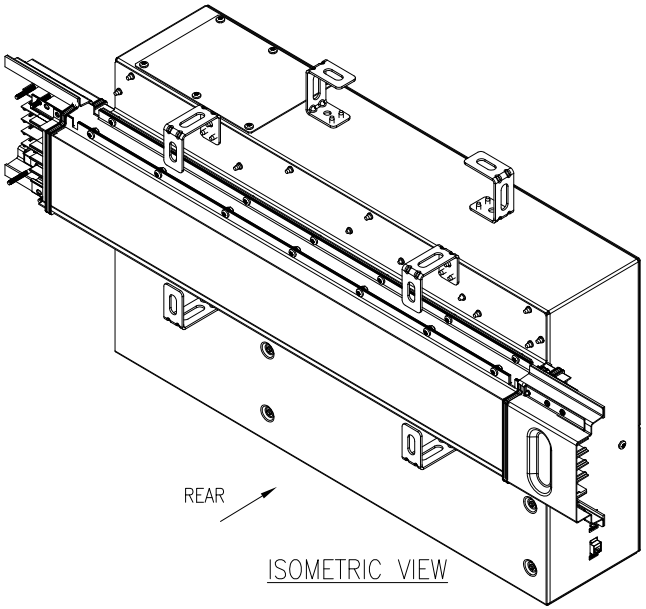

ISOMETRIC VIEW

NOTES:
1. COMPLY WITH ALL APPLICABLE NATIONAL, STATE AND LOCAL CODES.
2. REFER TO PRODUCT MANUALS PRIOR TO INSTALLATION AND SITE PREPARATION WORK FOR FURTHER DETAILS.
3. ALL DIMENSIONS ARE IN INCHES [MILLIMETERS].
△4. SIDE MOUNTING IS OPTIONAL, FOR SIDE MOUNTING USE THE 4 BRACKETS LOCATED ON THE BACK OF THE BOX.

PBCF4A400ATBM

THIS DRAWING AND SPECIFICATIONS HEREIN ARE THE PROPERTY OF SCHNEIDER ELECTRIC AND SHALL NOT BE COPIED, REPRODUCED OR USED IN WHOLE OR IN PART, AS THE BASIS FOR THE MANUFACTURE OR SALE OF ITEMS WITHOUT WRITTEN PERMISSION FROM SCHNEIDER ELECTRIC. THIS DRAWING IS BASED UPON LATEST AVAILABLE INFORMATION AND IS SUBJECT TO CHANGE WITHOUT NOTICE.

Schneider Electric

TITLE: iBusway for Data Center System POWER FEED UNITS 3PHASE,400A,600V WITH METERING, MAIN MECHANICAL-2	DWG NO: PBCF4A400ATB		REV. 0
	DRAWN BY: K.NAGENDRA	06-AUG-14	THIRD ANGLE PROJECTION
	ENGINEER: NARAYAN Nr	06-AUG-14	
PROJECT: DRAWINGS SHEET 2 OF 6	APPROVED BY: AL WARNER	06-AUG-14	

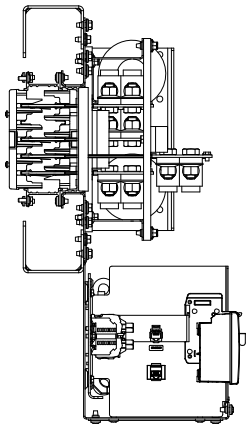

LEFT VIEW
(INTERNAL)

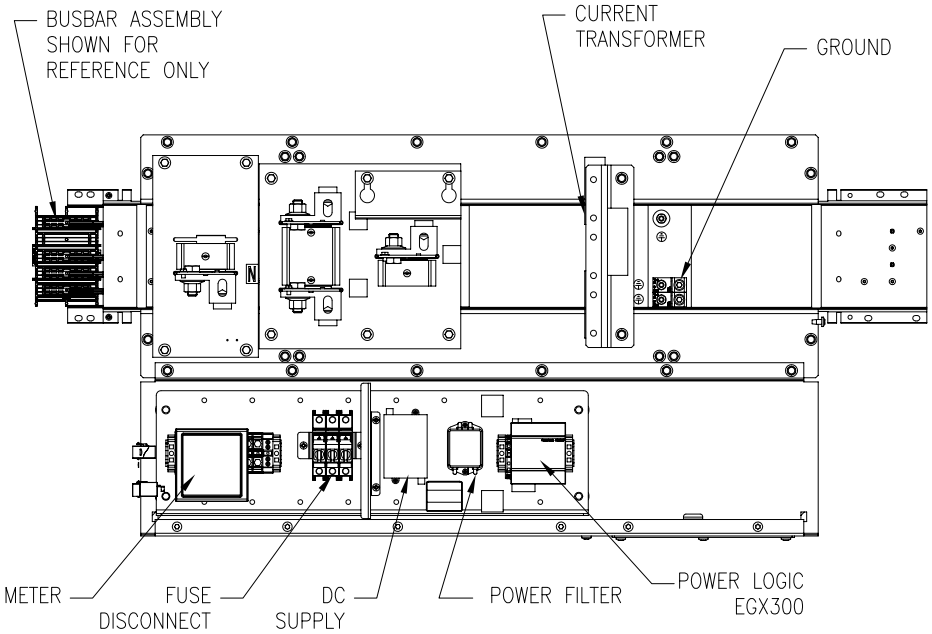

FRONT VIEW
(INTERNAL)

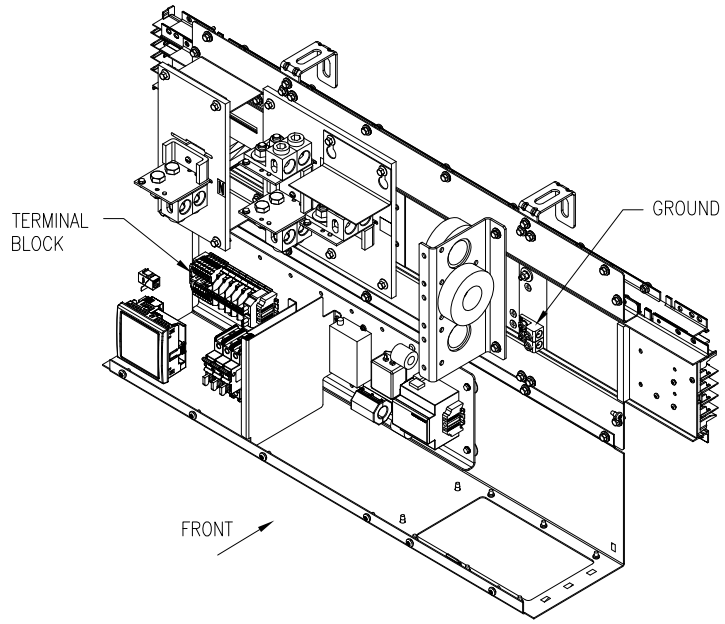

ISOMETRIC VIEW

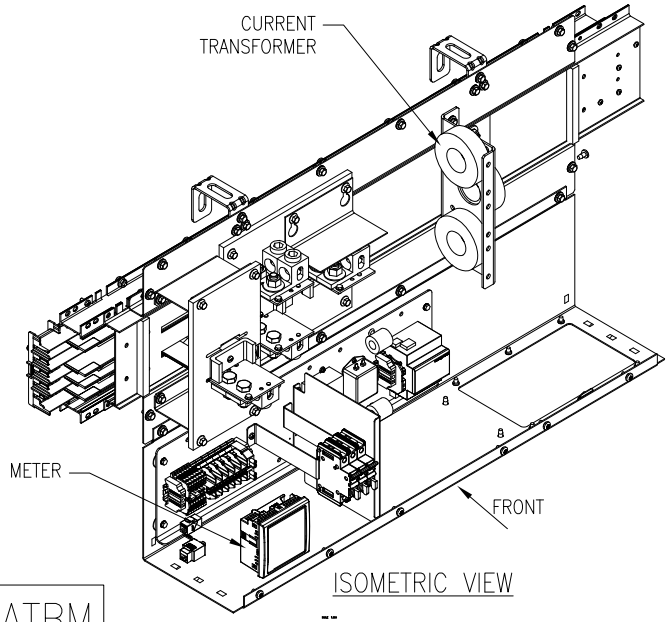

ISOMETRIC VIEW

NOTES:

1. COMPLY WITH ALL APPLICABLE NATIONAL, STATE AND LOCAL CODES.
2. REFER TO PRODUCT MANUALS PRIOR TO INSTALLATION AND SITE PREPARATION WORK FOR FURTHER DETAILS.
3. ALL DIMENSIONS ARE IN INCHES [MILLIMETERS].

PBCF4A400ATBM

THIS DRAWING AND SPECIFICATIONS HEREIN ARE THE PROPERTY OF SCHNEIDER ELECTRIC AND SHALL NOT BE COPIED, REPRODUCED OR USED IN WHOLE OR IN PART, AS THE BASIS FOR THE MANUFACTURE OR SALE OF ITEMS WITHOUT WRITTEN PERMISSION FROM SCHNEIDER ELECTRIC. THIS DRAWING IS BASED UPON LATEST AVAILABLE INFORMATION AND IS SUBJECT TO CHANGE WITHOUT NOTICE.

Schneider Electric

TITLE: iBusway for Data Center System POWER FEED UNITS 3PHASE,400A,600V WITH METERING, INTERNAL VIEW	DWG NO: PBCF4A400ATB		REV. 0
	DRAWN BY: K.NAGENDRA	06-AUG-14	THIRD ANGLE PROJECTION
	ENGINEER: NARAYAN Nr	06-AUG-14	
PROJECT: DRAWINGS SHEET 3 OF 6	APPROVED BY: AL WARNER	06-AUG-14	

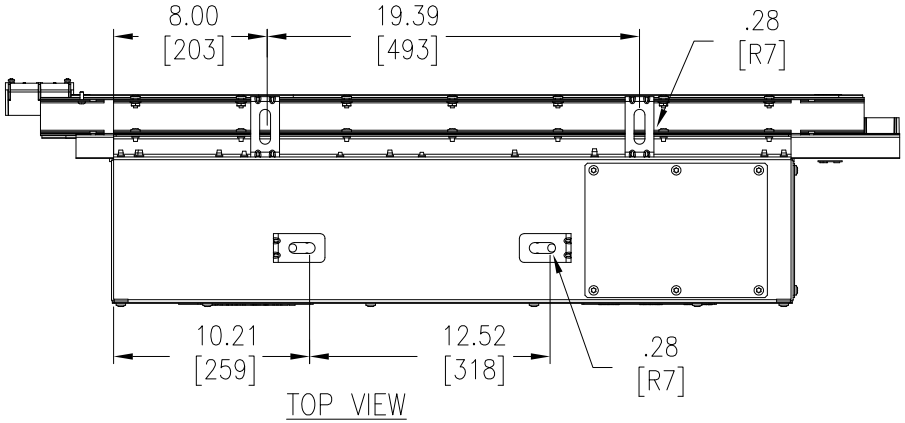

TOP VIEW

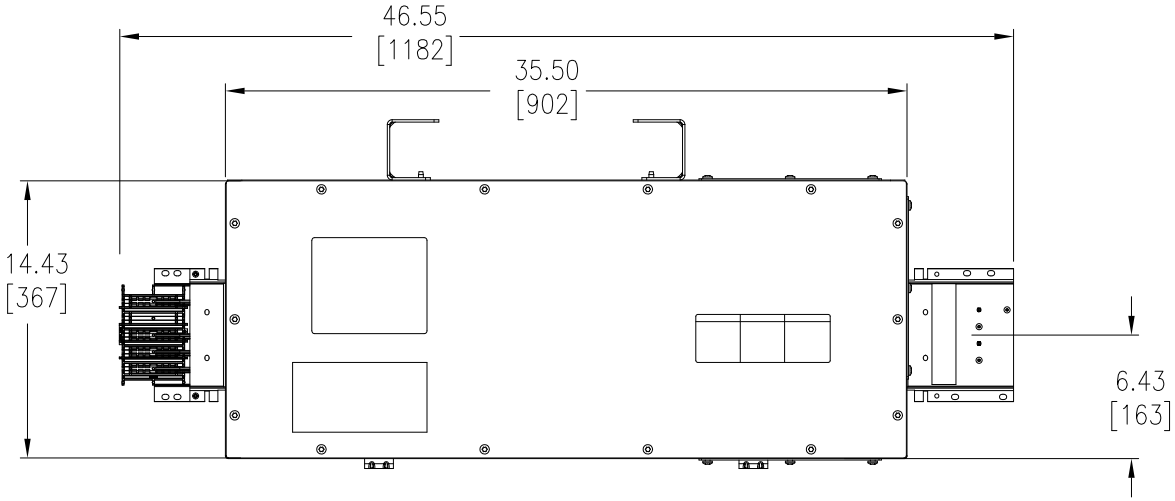

FRONT VIEW

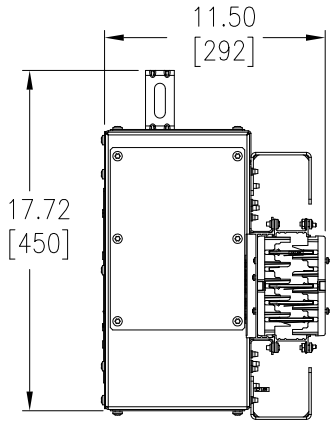

RIGHT VIEW

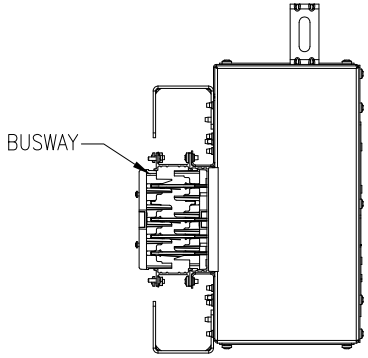

LEFT VIEW

Section–AA(Busway size)

400A

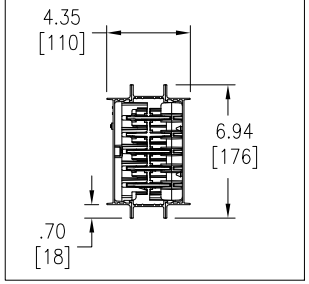

NOTES:
1. COMPLY WITH ALL APPLICABLE NATIONAL, STATE AND LOCAL CODES.
2. REFER TO PRODUCT MANUALS PRIOR TO INSTALLATION AND SITE PREPARATION WORK FOR FURTHER DETAILS. ONLY TRAINED ELECTRICIAN MUST PERFORM WORK ON THIS EQUIPMENT.
3. TURN OFF POWER TO BUSWAY BEFORE INSTALLING, REMOVING, OR WORKING ON THIS EQUIPMENT.
4. DO NOT INSTALL VERTICALLY, POWERBUS IS NOT SUITABLE FOR VERTICAL MOUNTING.
5. PROVIDE SUFFICIENT HORIZONTAL AND VERTICAL CLEARANCE FROM WALLS AND CEILINGS TO PROVIDE EASY ACCESS TO JOINTS AND SUFFICIENT ROOM FOR TAP OFF UNIT INSTALLATION.
6. ENSURE THAT ALL JOINT CONTACT SURFACES ARE FREE OF CONTAMINANTS.
7. VERIFY THAT THE SYSTEM PHASING MATCHES THE BUSWAY PHASING.
8. ALL DIMENSIONS ARE IN INCHES [MILLIMETERS]
9. WEIGHT OF THE UNIT IS 95.0lbs [43.1kg]

PBCF4A400ATBB

THIS DRAWING AND SPECIFICATIONS HEREIN ARE THE PROPERTY OF SCHNEIDER ELECTRIC AND SHALL NOT BE COPIED, REPRODUCED OR USED IN WHOLE OR IN PART, AS THE BASIS FOR THE MANUFACTURE OR SALE OF ITEMS WITHOUT WRITTEN PERMISSION FROM SCHNEIDER ELECTRIC. THIS DRAWING IS BASED UPON LATEST AVAILABLE INFORMATION AND IS SUBJECT TO CHANGE WITHOUT NOTICE.

Schneider Electric

TITLE: iBusway for Data Center System POWER FEED UNITS 3PHASE,400A,600V WITHOUTMETERING, MAIN MECHANICAL–1	DWG NO: PBCF4A400ATB		REV. 0
	DRAWN BY: K.NAGENDRA	06–AUG–14	THIRD ANGLE PROJECTION
	ENGINEER: NARAYAN Nr	06–AUG–14	
PROJECT: DRAWINGS SHEET 4 OF 6	APPROVED BY: AL WARNER	06–AUG–14	

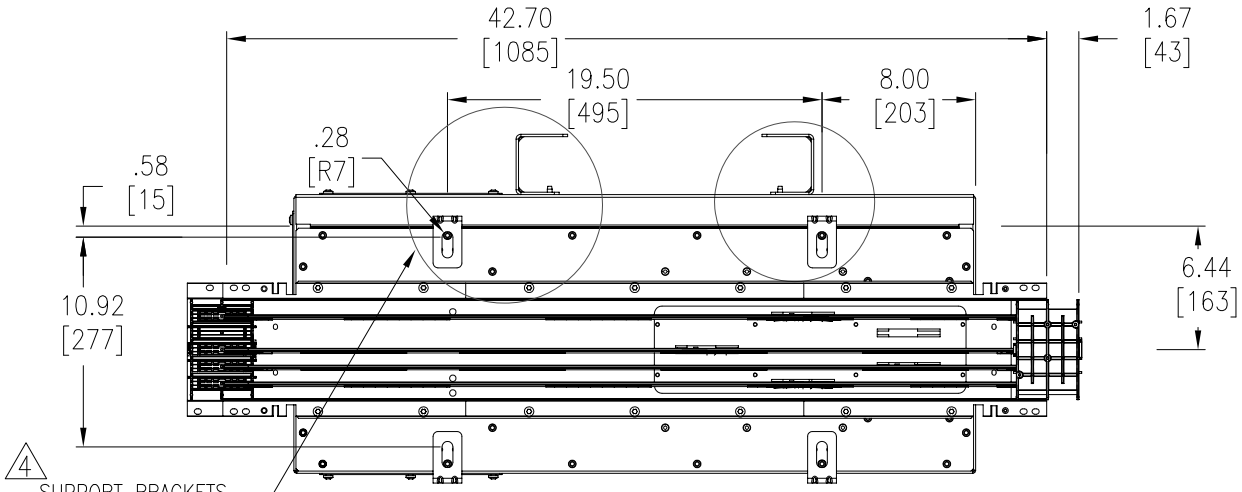

REAR VIEW

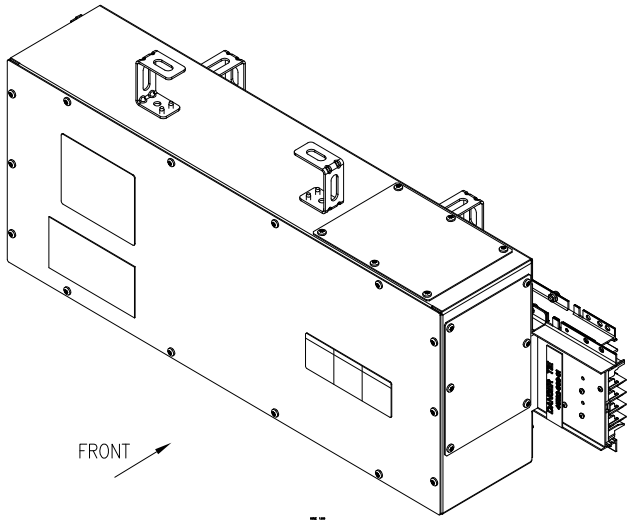

ISOMETRIC VIEW

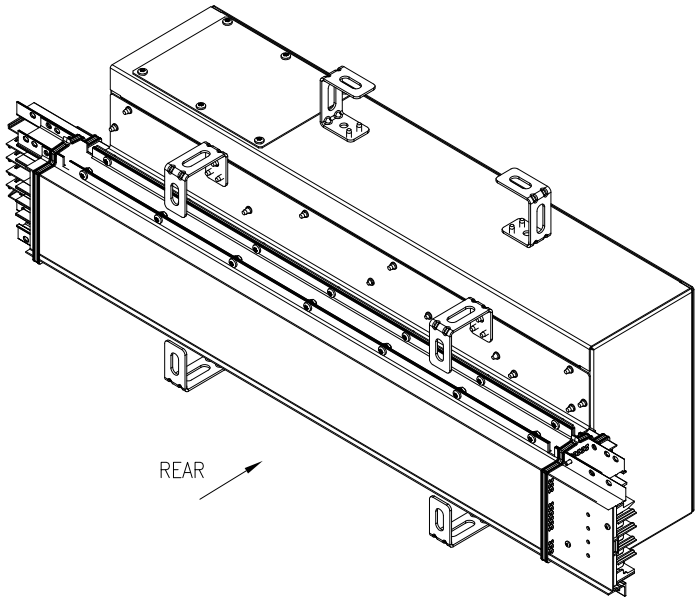

ISOMETRIC VIEW

NOTES:
1. COMPLY WITH ALL APPLICABLE NATIONAL, STATE AND LOCAL CODES.
2. REFER TO PRODUCT MANUALS PRIOR TO INSTALLATION AND SITE PREPARATION WORK FOR FURTHER DETAILS.
3. ALL DIMENSIONS ARE IN INCHES [MILLIMETERS].
△4. SIDE MOUNTING IS OPTIONAL, FOR SIDE MOUNTING USE THE 4 BRACKETS LOCATED ON THE BACK OF THE BOX.

PBCF4A400ATBB

THIS DRAWING AND SPECIFICATIONS HEREIN ARE THE PROPERTY OF SCHNEIDER ELECTRIC AND SHALL NOT BE COPIED, REPRODUCED OR USED IN WHOLE OR IN PART, AS THE BASIS FOR THE MANUFACTURE OR SALE OF ITEMS WITHOUT WRITTEN PERMISSION FROM SCHNEIDER ELECTRIC. THIS DRAWING IS BASED UPON LATEST AVAILABLE INFORMATION AND IS SUBJECT TO CHANGE WITHOUT NOTICE.

Schneider Electric

TITLE: iBusway for Data Center System POWER FEED UNITS 3PHASE,400A,600V WITHOUT METERING, MAIN MECHANICAL-2	DWG NO: PBCF4A400ATB		REV. 0
	DRAWN BY: K.NAGENDRA	06-AUG-14	THIRD ANGLE PROJECTION
	ENGINEER: NARAYAN Nr	06-AUG-14	
PROJECT: DRAWINGS SHEET 5 OF 6	APPROVED BY: AL WARNER	06-AUG-14	

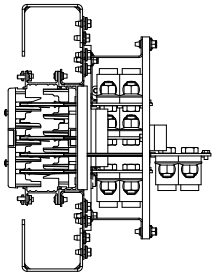

LEFT VIEW
(INTERNAL)

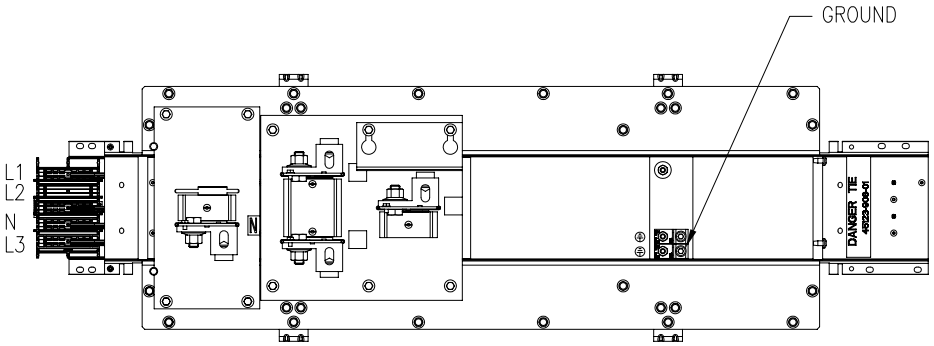

FRONT VIEW
(INTERNAL)

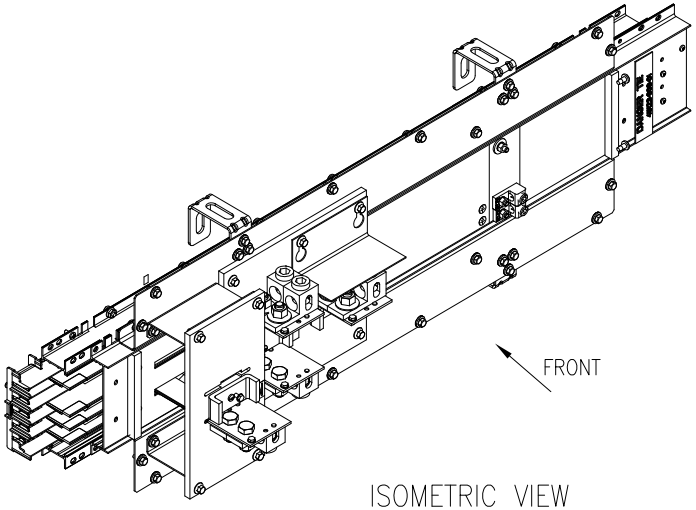

ISOMETRIC VIEW

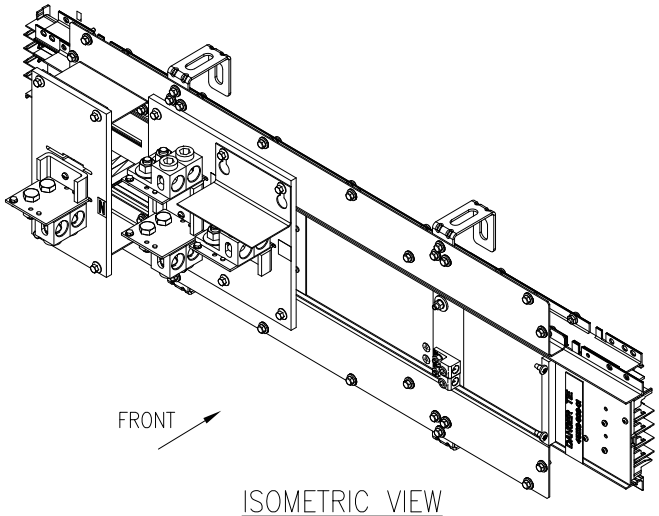

ISOMETRIC VIEW

NOTES:

1. COMPLY WITH ALL APPLICABLE NATIONAL, STATE AND LOCAL CODES.
2. REFER TO PRODUCT MANUALS PRIOR TO INSTALLATION AND SITE PREPARATION WORK FOR FURTHER DETAILS.
3. ALL DIMENSIONS ARE IN INCHES [MILLIMETERS].

PBCF4A400ATBB

THIS DRAWING AND SPECIFICATIONS HEREIN ARE THE PROPERTY OF SCHNEIDER ELECTRIC AND SHALL NOT BE COPIED, REPRODUCED OR USED IN WHOLE OR IN PART, AS THE BASIS FOR THE MANUFACTURE OR SALE OF ITEMS WITHOUT WRITTEN PERMISSION FROM SCHNEIDER ELECTRIC. THIS DRAWING IS BASED UPON LATEST AVAILABLE INFORMATION AND IS SUBJECT TO CHANGE WITHOUT NOTICE.

Schneider Electric

TITLE: iBusway for Data Center System
POWER FEED UNITS
3PHASE,400A,600V
WITHOUT METERING, INTERNAL VIEW

PROJECT: DRAWINGS | SHEET 6 OF 6

DWG NO:	PBCF4A400ATB		REV. 0
DRAWN BY:	K.NAGENDRA	06-AUG-14	THIRD ANGLE PROJECTION
ENGINEER:	NARAYAN Nr	06-AUG-14	
APPROVED BY:	AL WARNER	06-AUG-14	