JYT8914501

Altivar
ATV340, ATV9●●

CIP Safety Module
VW3A3809

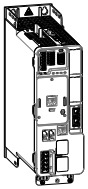

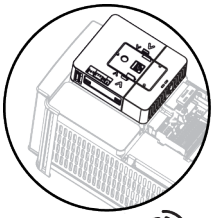

Page 2

Page 3

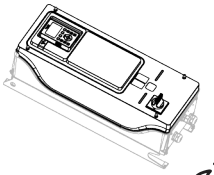

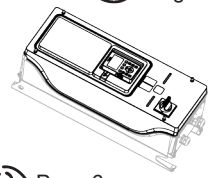

Page 6

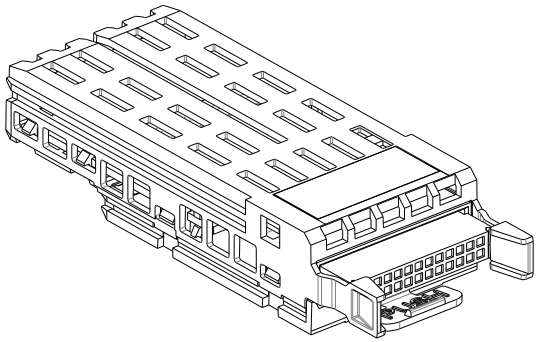

Contact your local Schneider Electric representative for firmware version compatibility between the module and the drive.

⚠ ⚠ DANGER

HAZARD OF ELECTRIC SHOCK, EXPLOSION, OR ARC FLASH

- Only appropriately trained persons who are familiar with and fully understand the contents of the present manual and all other pertinent product documentation and who have received all necessary training to recognize and avoid hazards involved are authorized to work on and with this equipment.
- Installation, adjustment, repair, and maintenance must be performed by qualified personnel.
- Verify compliance with all local and national electrical code requirements as well as all other applicable regulations with respect to grounding of all equipment.
- Before performing work and/or applying voltage on the equipment, follow the instructions given in the appropriate installation manual.

Failure to follow these instructions will result in death or serious injury.

ATV900 CIP Safety manual - VW3A3809 JYT89146 (English)

ATV340 CIP Safety manual - VW3A3809 JYT89148 (English)

Electrical equipment should be installed, operated, serviced, and maintained only by qualified personnel. No responsibility is assumed by Schneider Electric for any consequences arising out of the use of this product.

© 2023 Schneider Electric. All Rights Reserved.

UK CA **UK Representative:**
Schneider Electric Limited
Stafford Park 5
Telford, TF3 3BL, UK

ATV340

Up to ATV340D22N4E

Mounting

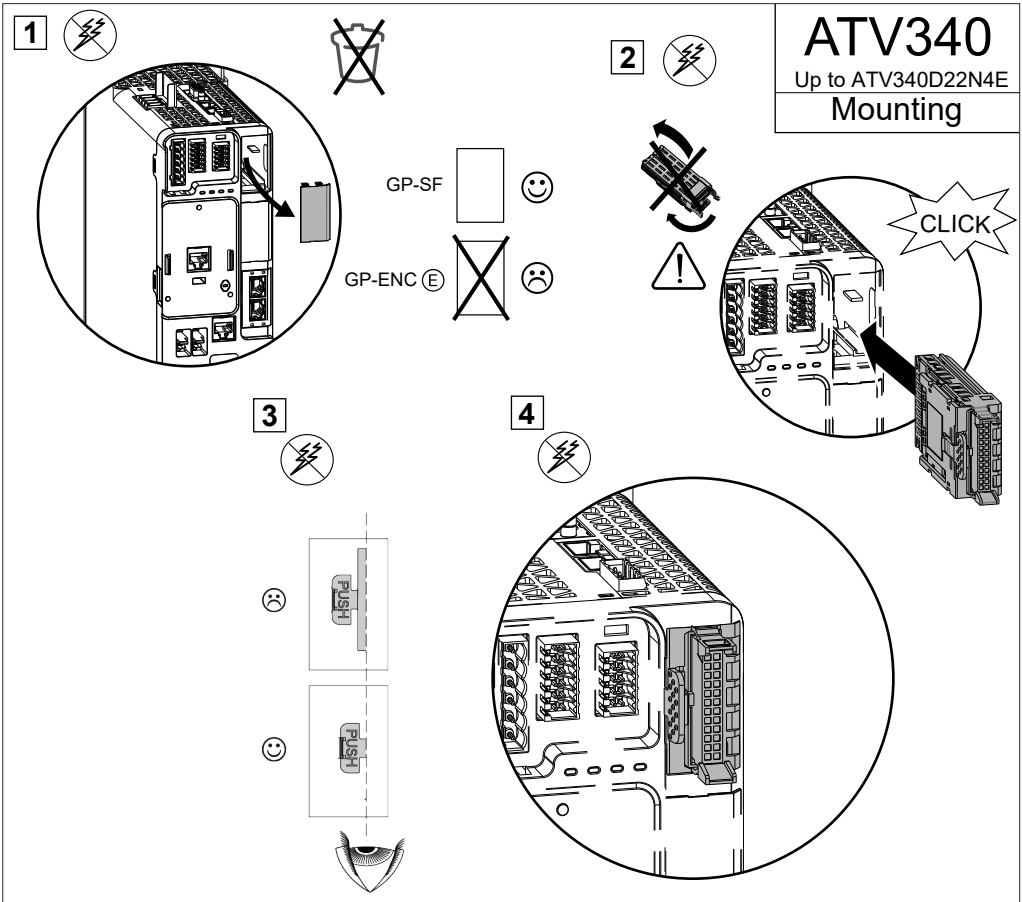

ATV340

Up to ATV340D22N4E

Removing

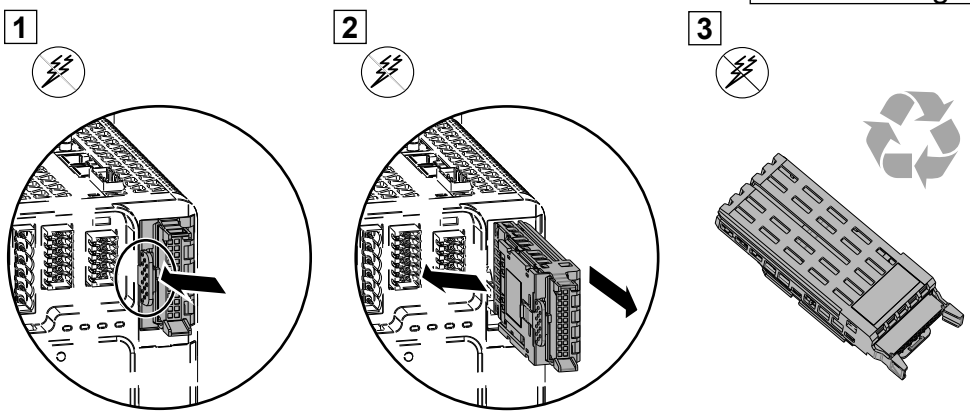

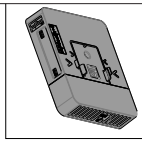

VW3A3800

NHA80733

ATV340

From ATV340D30N4E

ATV9●●

IP21

Mounting

1

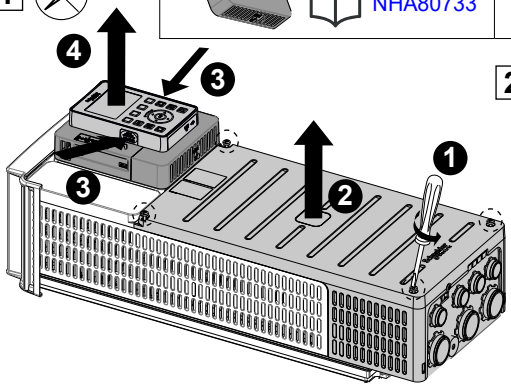

2

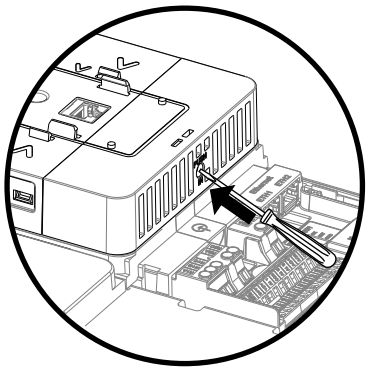

3

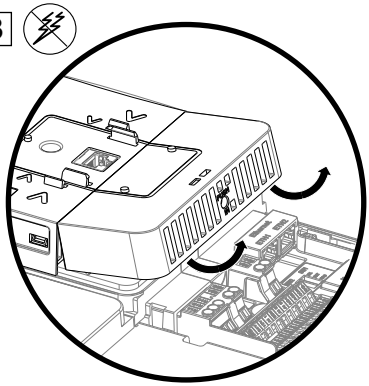

4

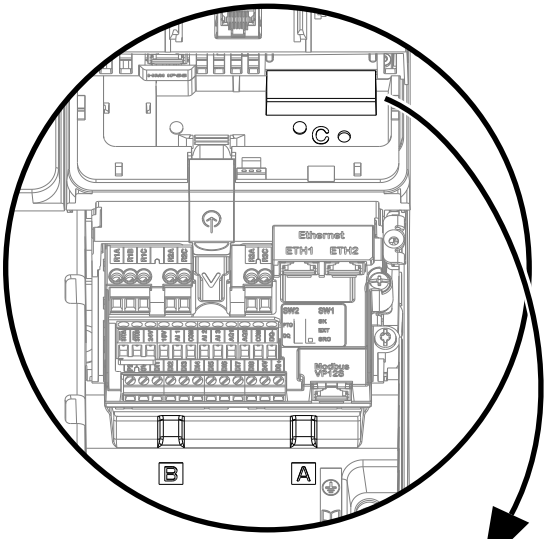

5

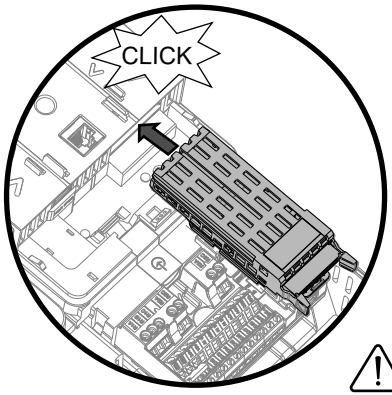

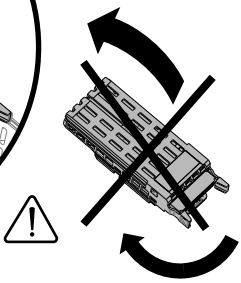

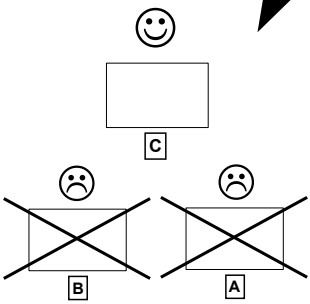

ATV340 | ATV9●●

From ATV340D30N4E | IP21

Mounting

6

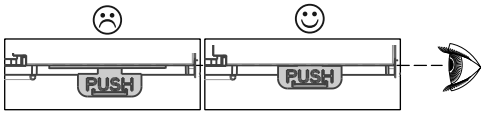

7

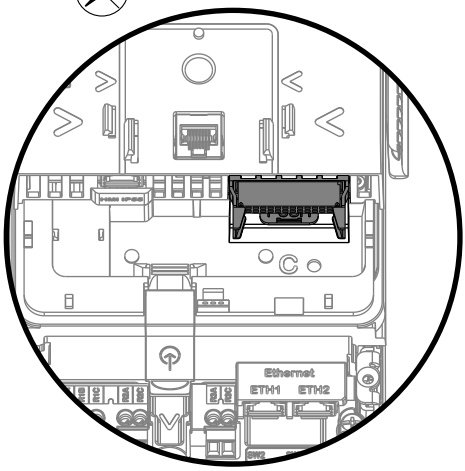

8

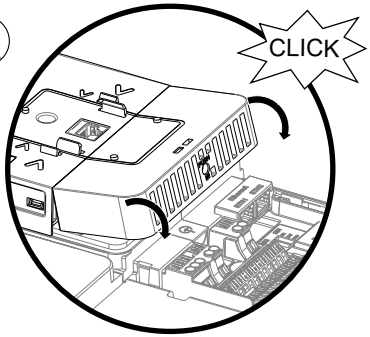

9

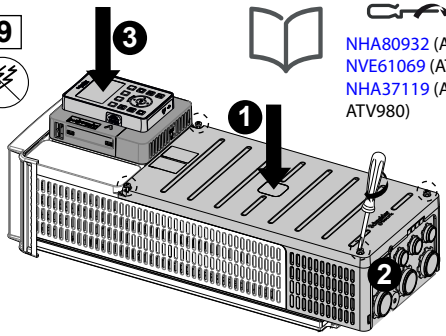

NHA80932 (ATV900)
NVE61069 (ATV340)
NHA37119 (ATV960, ATV980)

ATV340 | ATV9●●

From ATV340D30N4E | IP21

Removing

1

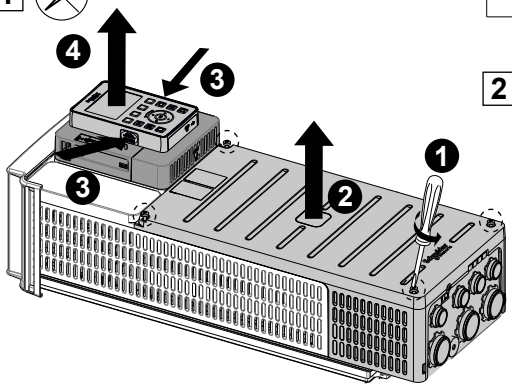

2

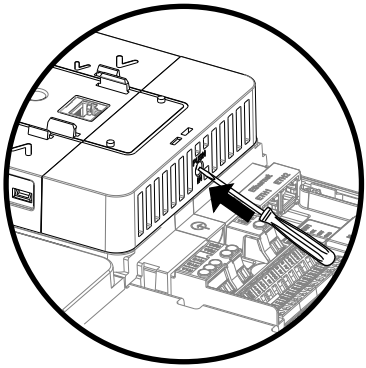

ATV340 / ATV9●●

From ATV340D30N4E | IP21

Removing

3

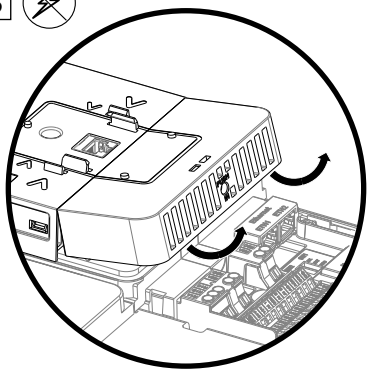

4

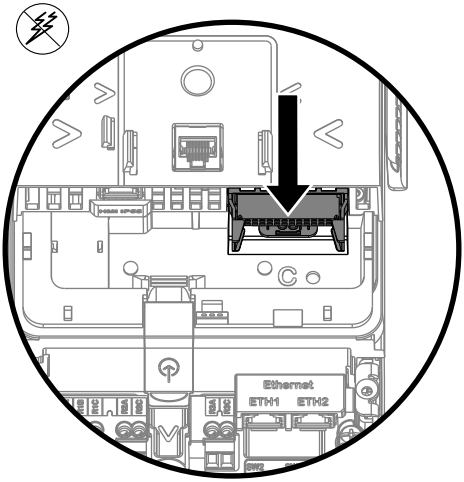

5

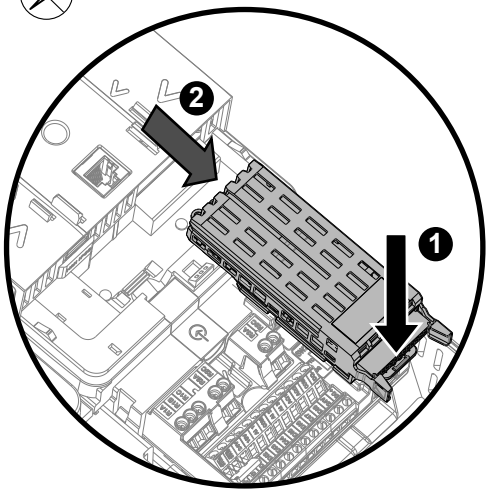

6

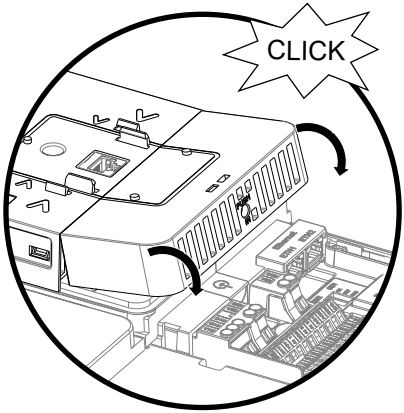

7

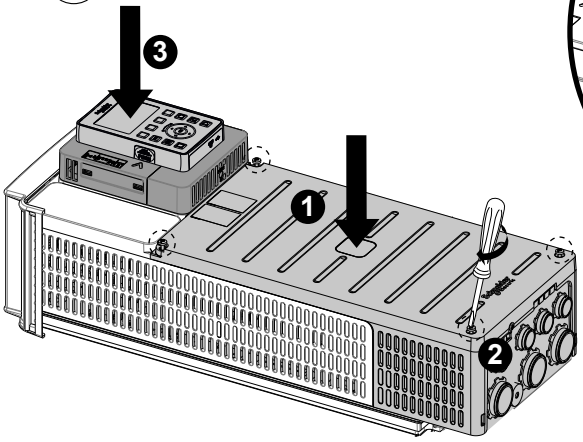

NHA80932 (ATV900)
NVE61069 (ATV340)
NHA37119 (ATV960, ATV980)

1

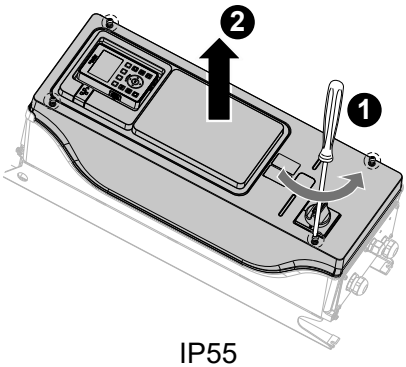

IP55
Up to ATV950D11N4

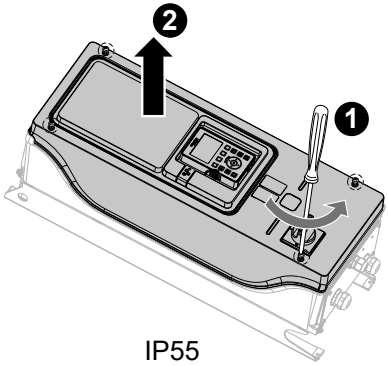

IP55
ATV950D15N4 to D22N4

2

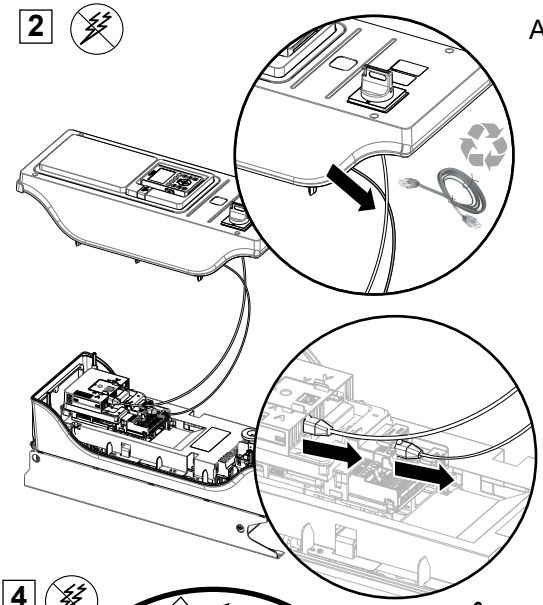

3

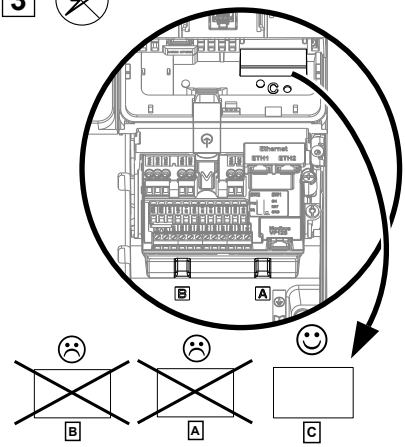

4

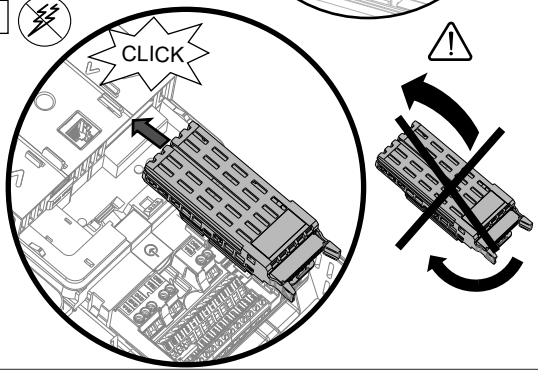

5

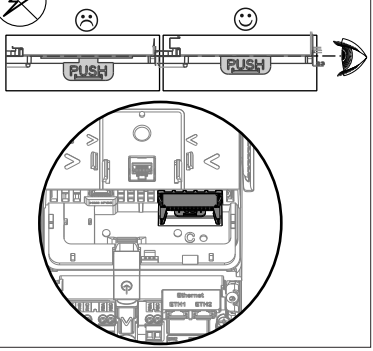

ATV9●●
IP55
Mounting

6

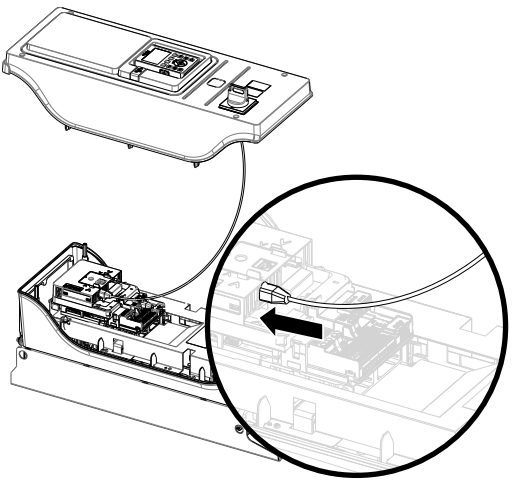

7

IP55
Up to ATV950D11N4

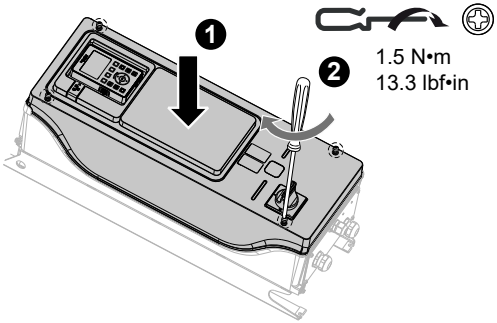

IP55
ATV950D15N4 to D22N4

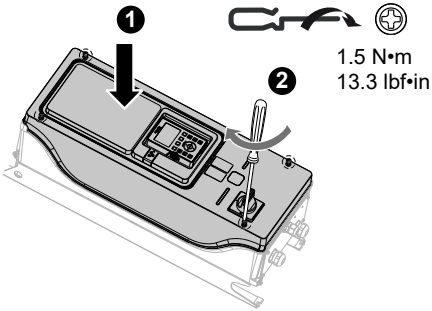

ATV9●●
IP55
Removing

1

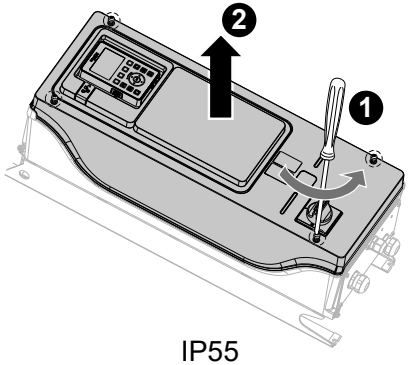

IP55
Up to ATV950D11N4

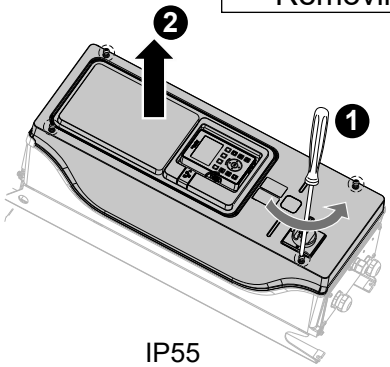

IP55
ATV950D15N4 to D22N4

ATV9●●

IP55

Removing

2

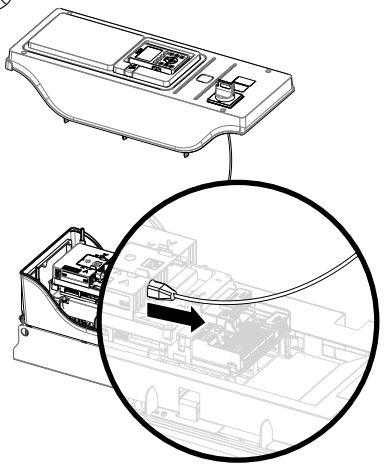

3

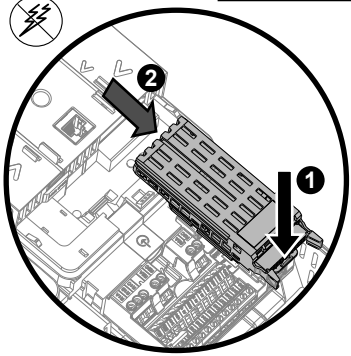

4

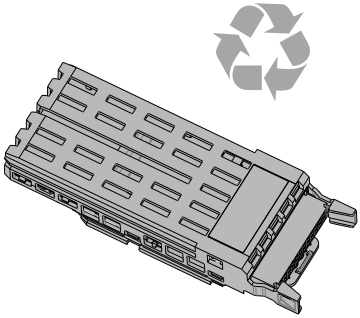

5

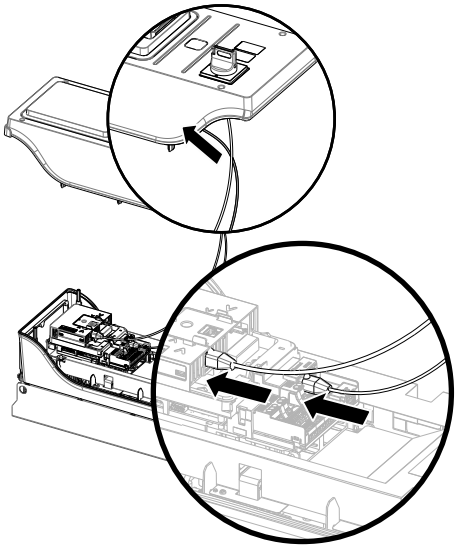

6

IP55
Up to ATV950D11N4

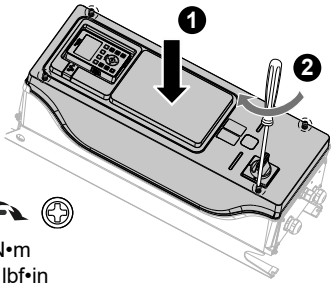

1.5 N•m
13.3 lbf•in

IP55
ATV950D15N4 to D22N4

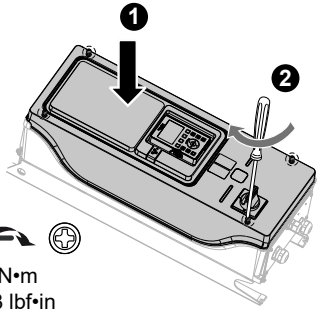

1.5 N•m
13.3 lbf•in