Product data sheet

Specifications

Transformer, Type T, industrial control, 350VA, 1 phase, 240/480/600V primary, 120V secondary, 80C rise

9070T350D32

Product availability: Non-Stock - Not normally stocked in distribution facility

Main

Product Type	Industrial Control Transformer
Type	T

Complementary

Number of Phases	1 phase
Power Rating	350 VA UL 350 VA CSA 350 VA NOM 250 VA CE
Primary to Secondary Voltage	240/480/600 V 100/120 V 230/460/575 V 95/115 V 220/440/550 V 90/110 V
Temperature Rise	80 °C
Electrical Connection	Screw clamp terminals
Height	3.84 in (97.54 mm)
Width	4.5 in (114.3 mm)
Depth	5.49 in (139.45 mm)
Material	Copper: winding
Fingersafe Cover Compatibility	FSC2

Environment

Certifications	UL listed file E61239 CSA file LR37055 guide 184-N-90
Enclosure Type	Not rated (open device)
Insulation Temperature	266 °F (130 °C)

Ordering and shipping details

Category	US10CP816206
Discount Schedule	0CP8
GTIN	785901058694
Returnability	No
Country of origin	US

Packing Units

Price is “List Price” and may be subject to a trade discount – check with your local distributor or retailer for actual price.

Disclaimer: This documentation is not intended as a substitute for and is not to be used for determining suitability or reliability of these products for specific user applications

Unit Type of Package 1	PCE
Nbr. of units in pkg.	1
Package 1 Height	6.00 in (15.24 cm)
Package 1 Width	7.50 in (19.05 cm)
Package 1 Length	6.50 in (16.51 cm)
Package weight(Lbs)	11.700 lb(US) (5.307 kg)

Contractual warranty

Warranty	10 Years

Environmental Data

Schneider Electric aims to achieve Net Zero status by 2050 through supply chain partnerships, lower impact materials, and circularity via our ongoing “Use Better, Use Longer, Use Again” campaign to extend product lifetimes and recyclability.

Environmental Data explained

How we assess product sustainability

Environmental footprint

Environmental Disclosure	Product Environmental Profile

Use Better

Materials and Substances

Packaging made with recycled cardboard	Yes
Packaging without single use plastic	No
EU RoHS Directive	Compliant with Exemptions
REACh Regulation	REACh Declaration
California proposition 65	WARNING: This product can expose you to chemicals including: Phenyl glycidyl ether, which is known to the State of California to cause cancer and birth defects or other reproductive harm. For more information go to www.P65Warnings.ca.gov
PVC free	Yes

Use Again

Repack and remanufacture

Circularity Profile	No need of specific recycling operations
Take-back	No

Technical Illustration

Dimensions

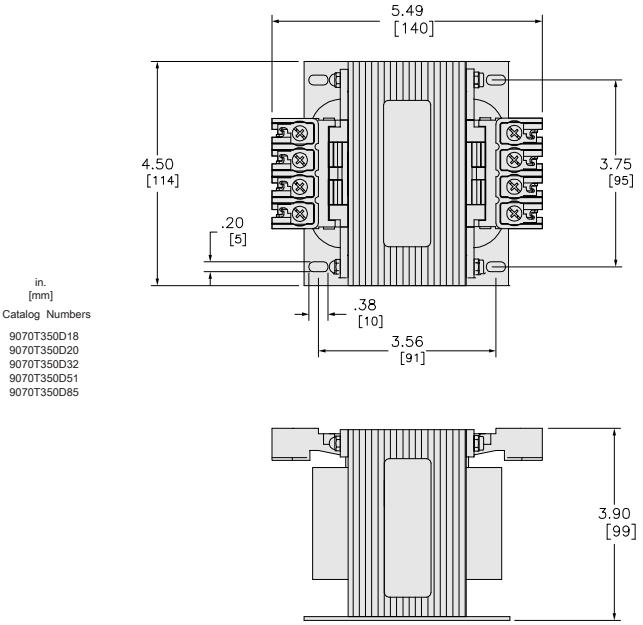

Technical Illustration

Wiring diagram

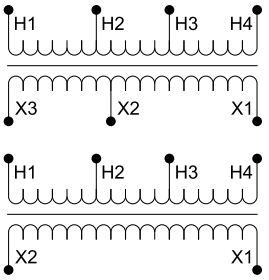

Options

Voltage Code	Voltages		Connections	
	Primary	Secondary	Primary	Secondary
D18	208/277/380	95/115	208: Connect to H1 and H2 277: Connect to H1 and H3 380: Connect to H1 and H4	95: Connect to X1 and X2 115: Connect to X1 and X3
D32	220/440/550 230/460/575 240/480/600	90/110 95/115 100/120	220 or 230 or 240: Connect to H1 and H2 440 or 460 or 480: Connect to H1 and H3 550 or 575 or 660: Connect to H1 and H4	90 or 95 or 100: Connect to X1 and X2 110 or 115 or 120: Connect to X1 and X3

REFER TO TECHNICAL DOCUMENTATION FOR COMPLETE INFORMATION.