Product data sheet

Specifications

Transformer, Type T, industrial control, 250VA, 1 phase, 550/575/600V primary, 120/240V secondary, 80C rise

9070T250D37

Product availability: Stock - Normally stocked in distribution facility

Main

Product Type	Industrial Control Transformer
Type	T

Complementary

Number of Phases	1 phase
Power Rating	250 VA UL 250 VA CSA 250 VA NOM 160 VA CE
Primary to Secondary Voltage	550/575/600 V 120/240 V 550/575/600 V 115/230 V 550/575/600 V 110/220 V
Temperature Rise	80 °C
Electrical Connection	Screw clamp terminals
Height	3.2 in (81.3 mm)
Width	3.75 in (95.25 mm)
Depth	5.3 in (134.6 mm)
Fingersafe Cover Compatibility	FSC2

Environment

Certifications	UL Listed CSA
Enclosure Type	Not rated (open device)
Insulation Temperature	266 °F (130 °C)

Ordering and shipping details

Category	US10CP816206
Discount Schedule	0CP8
GTIN	785901689133
Returnability	Yes
Country of origin	US

Packing Units

Unit Type of Package 1	PCE

Price is “List Price” and may be subject to a trade discount – check with your local distributor or retailer for actual price.

Disclaimer: This documentation is not intended as a substitute for and is not to be used for determining suitability or reliability of these products for specific user applications

Nbr. of units in pkg.	1
Package 1 Height	5.50 in (13.97 cm)
Package 1 Width	6.20 in (15.748 cm)
Package 1 Length	7.10 in (18.034 cm)
Package weight(Lbs)	7.401 lb(US) (3.357 kg)

Contractual warranty

Warranty	10 Years

Environmental Data

Schneider Electric aims to achieve Net Zero status by 2050 through supply chain partnerships, lower impact materials, and circularity via our ongoing “Use Better, Use Longer, Use Again” campaign to extend product lifetimes and recyclability.

Environmental Data explained

How we assess product sustainability

Environmental footprint

Environmental Disclosure	Product Environmental Profile

Use Better

Materials and Substances

Packaging made with recycled cardboard	Yes
Packaging without single use plastic	No
EU RoHS Directive	Compliant with Exemptions
REACh Regulation	REACh Declaration
California proposition 65	WARNING: This product can expose you to chemicals including: Phenyl glycidyl ether, which is known to the State of California to cause cancer and birth defects or other reproductive harm. For more information go to www.P65Warnings.ca.gov
PVC free	Yes

Use Again

Repack and remanufacture

Circularity Profile	No need of specific recycling operations
Take-back	No

Technical Illustration

Dimensions

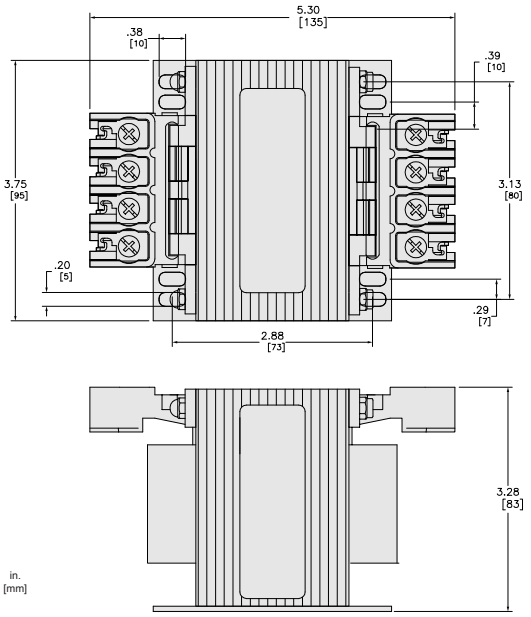

Technical Illustration

Wiring diagram

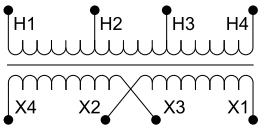

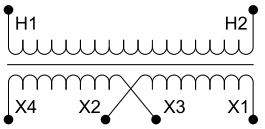

Options

Voltage Code	Voltages		Connections	
	Primary	Secondary	Primary	Secondary
D33	380/400/415	115/230	380: Connect to H1 and H2 400: Connect to H1 and H3 415: Connect to H1 and H4	115: Connect to X1 and X4 Jumper X1 with X3 Jumper X2 with X4 230: Connect to X1 and X4 Jumper X2 with X3
D37	550/575/600	110/220 115/230 120/240	550 or 575 or 600: Connect to H1 and H2	110 or 115 or 120: Connect to X1 and X4 Jumper X1 with X3 Jumper X2 with X4 220 or 230 or 240:Connect to X1 and X4 Jumper X2 with X3

REFER TO TECHNICAL DOCUMENTATION FOR COMPLETE INFORMATION.