PowerLogic™ PFC

Smart Low Voltage Capacitor Banks
UL/CSA

www.se.com

Life Is On | Schneider Electric

Your requirements...

Reduce Carbon footprint

- Use Power more efficiently
- Pay less for power
- Fewer CO_2 emissions

Optimize energy consumption

- By reducing electricity bills
- By reducing power losses

Increase power availability

- Compensate for voltage sags detrimental to process operation
- Avoid nuisance tripping and supply interruptions

Improve your business performance

- Optimize installation size
- Reduce harmonic distortion to avoid the premature ageing of equipment and destruction of sensitive components.

Our solutions…

Reactive energy management

In electrical networks, reactive energy results in increased line currents for a given active energy transmitted to loads.

The main consequences are:

- Need for oversizing of transmission and distribution networks by utilities,
- Increased voltage drops and sags along the distribution lines,
- Additional power losses.

This results in increased electricity bills for industrial customers because of:

- Penalties applied by most utilities on reactive energy,
- Increased overall kVA demand,
- Increased energy consumption within the installations.

Reactive energy management aims to optimize your electrical installation by reducing energy consumption, and to improve power availability. Total CO_2 emissions are also reduced.

Utility power bills are typically reduced by 5% to 10%*.

"Our energy consumption was reduced by

9%

after we installed 10 capacitor banks with detuned reactors.
Electricity bill optimised by 8% and payback in 2 years."

Testifies Michelin Automotive in France.

"With SE Power Quality soltions, we had more than

350K $

of annual saving in PF penalties."

Leading food processor, USA.

"With unique hybrid Power Quality solution from SE, we saw a huge reduction in monthly power demand by

33%

with a ROI **1 year."**

Leading Plastic processing facility.

* Performance reflects actual customer experience, your results may vary depending on your environment.

Improve electrical networks and **reduce energy costs**

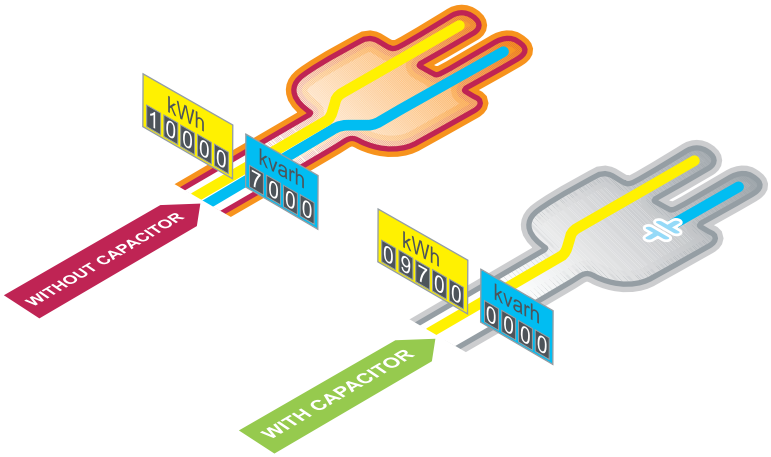

Power Factor Correction

Every electric machine needs active power (kW) and reactive power (kVAr) to operate.

- The power rating of the installation in kVA is the combination of both:
  $(kVA)^2 = (kW)^2 + (kVAr)^2$
- The Power Factor has been defined as the ratio of active power (kW) to apparent power (kVA).
  Power Factor = (kW) / (kVA)

The objective of Reactive Energy management is improvement of Power Factor, or "Power Factor Correction".

This is typically achieved by producing reactive energy close to the consuming loads, through connection of capacitor banks to the network.

Ensure **reliability** and **safety** on installations while achieving your sustainability goals with Smart power factor correction

Green

- With the best in class power factor correction solution, optimize your power losses which translates in energy saved and less CO_2 emissions.
- PowerLogic™ PFC Can reduce your carbon impact by 1.5 Tons CO_2 over its life Span. (Based on an electrical service that typically powers a commercial building or a facility like a water treatment plant, correcting Power Factor from 0.70 to 0.99 over 15 years.)

Smart

- An EcoStruxure™- ready PowerLogic™ PFC solution provides industry-leading diagnostics and IoT connectivity for superior performance monitoring and optimized maintenance.
- Self-monitoring to optimize maintenance and downtime.
- Real-time alarms and Notification to keep the highest uptime.

Quality and reliability

- Continuity of service thanks to the high performance and long-life expectancy of capacitors.
- Design and engineering with the highest international standards.
- 100% automated testing in manufacturing plant.

Safety

- Best in class capacitor with much safer 3 phase over pressure disconnection for safer disconnection at end of life.
- Designed for highest level of short circuit capacity.
- Multiple layers for protection for over temperature conditions
- Door limit switch to automatically shut off the capacitor bank when the door is opened while the capacitor bank is energized

Efficiency and Productivity

- Specially designed components to save time on installation and maintenance.
- Quality components for superior performance and life span
- Product development including innovation in ergonomics and ease of installation and connection.

Thanks to the know-how developed over 50 years, Schneider Electric ranks as the global specialist in Energy management providing a unique and comprehensive portfolio.

Schneider Electric **helps you to make the most of your energy with innovative, reliable and safe solutions.**

Power Factor correction Guidelines

Method for determining compensation

Choice of compensation type

The chart below indicates the standard or detuned compensation choices.

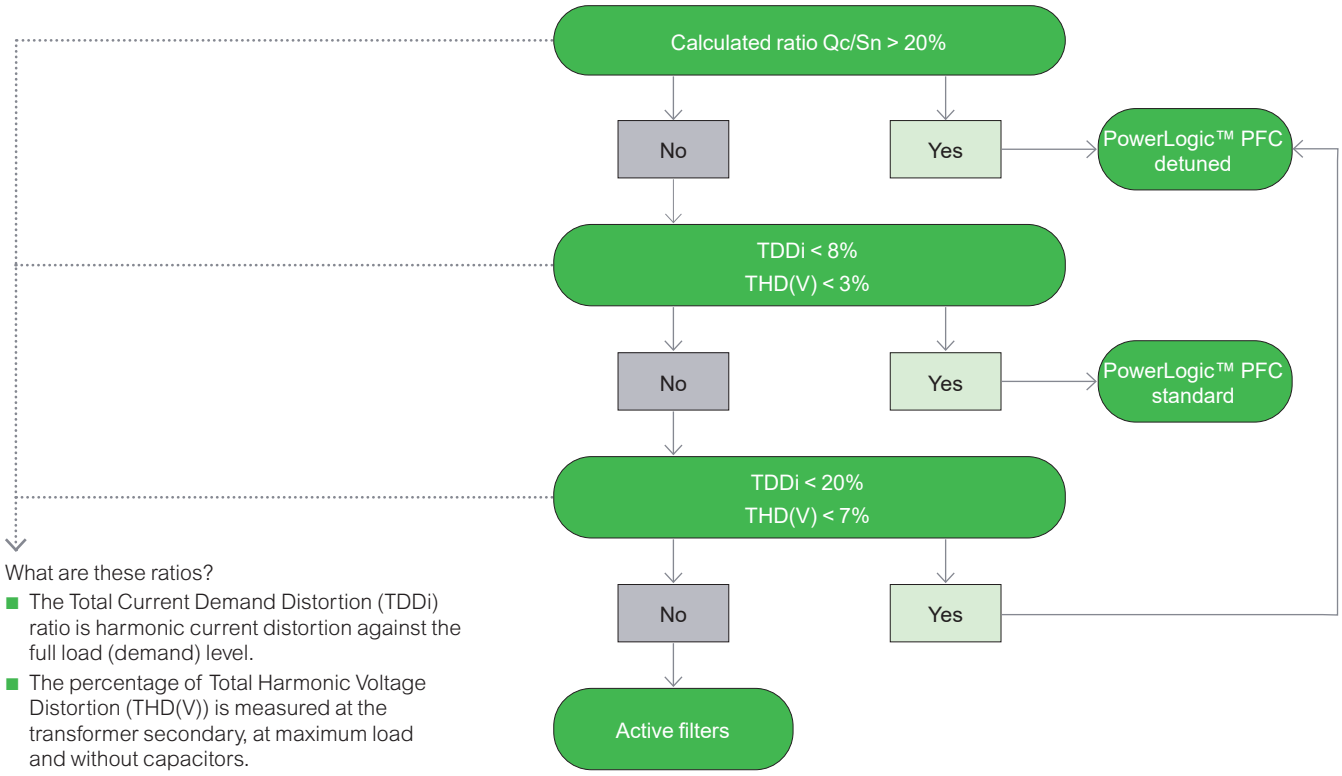

What are these ratios?

- The Total Current Demand Distortion (TDDi) ratio is harmonic current distortion against the full load (demand) level.
- The percentage of Total Harmonic Voltage Distortion (THD(V)) is measured at the transformer secondary, at maximum load and without capacitors.

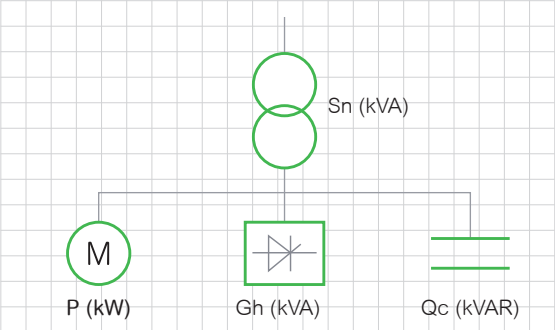

Sn: apparent power of the transformer

Gh: apparent power of harmonics-generating receivers (variable speed motors, static converters, power electronics, etc.)

Qc: power of the compensation equipment

V: network voltage

Power Factor correction Guidelines
Typical solutions depending on applications

Customer requirements

The table below shows the solutions most frequently used in different types of applications.

- Very frequently
- Usually
- Occasionally

In all cases, it is strongly recommended that measurements be carried out on site in order to validate the solution.

Types of applications	PowerLogic™ PFC Standard	PowerLogic™ PFC Detuned	PowerLogic™ PFC Fast
Industry			
Food and drink			
Textiles			
Wood			
Paper			
Printing			
Chemicals - pharmaceuticals			
Plastics			
Glass - ceramics			
Steel production			
Metallurgy			
Automotive			
Cement works			
Mining			
Refineries			
Microelectronics			
Tertiary			
Banks - insurance			
Supermarkets			
Hospitals			
Stadiums			
Amusement parks			
Hotels - offices			
Energy and infrastructure			
Substations			
Water distribution			
Internet			
Railway transport			
Airports			
Underground train systems			
Bridges			
Tunnels			
Wind turbines			

PowerLogic™ PFC offer
Overview

PowerLogic™ PFC

ISO 9001
Quality certified manufacturing
ISO 14001
Environmental management system

Non contractual picture

EcoStruxure™ - ready PowerLogic™ PFC Smart power factor correction solutions provide industry-leading diagnostics and IoT connectivity for superior performance monitoring and optimized maintenance.

With embedded environmental sensors, PowerLogic™ PFC Smart Capacitor bank units are designed to notify you if a problem is detected or maintenance is needed. PowerLogic™ PFC Smart solutions are self-monitoring and ready to connect to any system for a more intelligent and proactive approach to operations and maintenance.

EcoStruxure™
Innovation At Every Level

EcoStruxure™ Power ready

- Seemless integration thanks to embedded Modbus communication
- Remote equipment follow up
- Remote troubleshooting
- Enable analytics & mobile benefits of EcoStruxure™ Power

PowerLogic™ PFC offer
Global Offer

Efficient

> Lower utility bills

- Utility bills are generally reduced by 10%
- ROI within 12 to 36 months

> Unlock Extra system Capacity

- +36% increase in power availably*
- 30% optimization in transformer rating

> Increase equipment performance and life span

- Multilayer and Redundancy of protections
- Reduced switching inrush current with Special designed contactor and DR.
- 100% SE components inside

> Environment and sustainability

- Reduced CO_2 emissions
- Positive carbon credits

Reliable

> Embedded environmental sensor

- For temperature and humidity monitoring

> Ready to connect

- RS-485 modus communication wireless sensors

> Self monitoring

- Smart APFC controller

> Proactive Maintenance

- For Regular Operation and Maintenance
- Avoid unscheduled system shutdown

Safe

> PowerLogic™ PFC Capacitor

- Best in Class capacitor with 3 phase overpressure disconnection system
- The capacitor container can withstand a pressure 10 times higher than the pressure it takes to activate the capacitor disconnecting device

> Smart PowerLogic™ PFC Controller

- Smart controller with voltage harmonic distortion and overvoltage protections

> Multilayer Thermal protection

- Thermal probe to protect against Over temperature
- Temperature monitoring (switch on fans above 30 °C, switch off steps in overtemperature)

> Module Overload and Short Circuit Protection

- Wide range of Icc rating Selection

> Robust Enclosure System

- Ik10 protection against mechanical shocks
- UV and Corrosion (Salt mist) withstand
- NEMA 1 Enclosure with Gasket option

Simple

> EcoStruxure™ Ready

- For Efficient Operation and Maintenance

> Optional Onboard Web Server

- For Real Time Power Monitoring

> Performance Monitoring Remote notification and Alarm

- For Real Time Power and performance monitoring

* Cf. Low voltage components catalog PFCED310003EN

PowerLogic™ PFC

Low Voltage Capacitor Bank – Standard

Network 480 & 600V / 60Hz

Environment

- Installation: Indoor
- Ambient temperature: 15°F to 114.8°F (-10°C to 46°C)
- Humidity: up to 95%
- Maximum altitude: 6500 feet (2000 m)

Standards

- cCSAus approved
- CSA 22.2 No. 190
- UL810, UL508a

Environment certifications

Produced in 14001 certified plants, product environmental profile available, Green premium.

Green Premium™

General characteristics

Electrical Characteristics	
Rated Voltage	480V & 600V / 60Hz
Capacitance Tolerance	-5%, +10%
Connection type	Three-phase
Power losses	< 2.5 W/kVAr
Maximum permissible over current	1.35 In
Maximum permissible over voltage	1.1 x Un, 8 h every 24 h
Enclosure	
Degree of protection	NEMA 1/NEMA 1 Gasket
Colour	RAL 7035
Degree of mechanical resistance	IK10
Controller	
PowerLogic™ PFC	PowerLogic™ PFC Controller with embedded Modbus communication
Head circuit breaker protection	
Without incoming circuit breaker	Lug connection
	LV PFC Bank must be protected by a circuit breaker or by a fused disconnector from upstream switchboard
With incoming circuit breaker	PowerPact with rotary handle
Step	
Capacitors Type	PowerLogic™ PFC Capacitor 575V for network voltage 480V
	PowerLogic™ PFC Capacitor 690V for network voltage 600V
	Maximum overcurrent: 1.8 x In
	3-phase overpressure protection
	Discharge resistance 50 V - 1 min
Contactors	Dedicated to capacitor switching
Circuit breaker protection	PowerPact
Temperature control	
Double control	By thermostat and by controller
Communication	
ModBus	RS-485
Installation	
Customer connection	Top entry
Auxilliary transformer	120V included - no need for additional supply
CT not included (see page 20)	5VA - secondary 1 or 5A
	To be installed upstream of the load and capacitor bank
GenSet contact	Available for disconnection with generator
Alarm contact	Available for remote warning signal

PowerLogic™ PFC

Low Voltage Capacitor Bank – Standard

Network 480 & 600V / 60Hz

Network voltage 480V - 60Hz

References	Power (kvar)	Smallest Step	Resolution	Electrical Steps	Physical Steps	Breaking Capacity	Main Circuit Breaker	Enclosure Type	Enclosure Size (H x W x D) mm	Max Weight (kg / lbs)
With incoming Circuit Breaker										
VA050B00140	50	12.5	12.5 + 12.5 +25	4	3	65 kA	HLM36100	VAW1N	850 x 800 x 400 (33.5 x 31.5 x 15.7) in	80 / 175
VA075B00140	75	12.5	2x12.5 + 2x25	6	4		HLM36150			
VA100B00140	100	25	25 + 25 + 50	4	3		JLM36200			
VA125B00140	125	25	25 + 50 + 50	5	3		LLM36600U31X	VAW2N	1200 x 1000 x 400 (47.2 x 39.4 x 15.7) in	125 / 275
VA150B00140	150	25	25 + 25 + 2x50	6	4		LLM36600U31X			
VA175B00140	175	25	25 + 3x50	7	4		LLM36600U31X			
VA200B00140	200	25	25 + 25 + 3x50	8	5		LLM36600U31X			
VA225B00140	225	25	25 + 4x50	9	5		LLM36600U31X			
VA250B00140	250	50	5x50	5	5		LLM36600U31X			

References	Power (kvar)	Smallest Step	Resolution	Electrical Steps	Physical Steps	Short-time Withstand Current	Recommended Upstream Protection	Enclosure Type	Enclosure Size (H x W x D) mm	Max Weight (kg / lbs)
With Main Lug										
VA050M00140	50	12.5	12.5 + 12.5 +25	4	3	25kA/3 cycles	HLM36100	VAW1N	850 x 800 x 400 (33.5 x 31.5 x 15.7) in	80 / 175
VA075M00140	75	12.5	2x12.5 + 2x25	6	4		HLM36150			
VA100M00140	100	25	25 + 25 + 50	4	3		JLM36200			
VA125M00140	125	25	25 + 50 + 50	5	3		LLM36600U31X	VAW2N	1200 x 1000 x 400 (47.2 x 39.4 x 15.7) in	125 / 275
VA150M00140	150	25	25 + 25 + 2x50	6	4		LLM36600U31X			
VA175M00140	175	25	25 + 3x50	7	4		LLM36600U31X			
VA200M00140	200	25	25 + 25 + 3x50	8	5		LLM36600U31X			
VA225M00140	225	25	25 + 4x50	9	5		LLM36600U31X			
VA250M00140	250	50	5x50	5	5		LLM36600U31X			

Network voltage 600V - 60Hz

References	Power (kvar)	Smallest Step	Resolution	Electrical Steps	Physical Steps	Breaking Capacity	Main Circuit Breaker	Enclosure Type	Enclosure Size (H x W x D) mm	Max Weight (kg / lbs)
With incoming Circuit Breaker										
VA050B01G60	50	12.5	12.5 + 12.5 +25	4	3	50 kA	HLM36100	VAW1N	850 x 800 x 400 (33.5 x 31.5 x 15.7) in	80 / 175
VA075B01G60	75	12.5	2x12.5 + 2x25	6	4		HLM36150			
VA100B01G60	100	25	25 + 25 + 50	4	3		JLM36200			
VA125B01G60	125	25	25 + 50 + 50	5	3		LLM36600U31X	VAW2N	1200 x 1000 x 400 (47.2 x 39.4 x 15.7) in	125 / 275
VA150B01G60	150	25	25 + 25 + 2x50	6	4		LLM36600U31X			
VA175B01G60	175	25	25 + 3x50	7	4		LLM36600U31X			
VA200B01G60	200	25	25 + 25 + 3x50	8	5		LLM36600U31X			
VA225B01G60	225	25	25 + 4x50	9	5		LLM36600U31X			
VA250B01G60	250	50	5x50	5	5		LLM36600U31X			

References	Power (kvar)	Smallest Step	Resolution	Electrical Steps	Physical Steps	Short-time Withstand Current	Recommended Upstream Protection	Enclosure Type	Enclosure Size (H x W x D) mm	Max Weight (kg / lbs)
With Main Lug										
VA050M01G60	50	12.5	12.5 + 12.5 +25	4	3	25kA/3 cycles	HLM36100	VAW1N	850 x 800 x 400 (33.5 x 31.5 x 15.7) in	80/ 175
VA075M01G60	75	12.5	2x12.5 + 2x25	6	4		HLM36150			
VA100M01G60	100	25	25 + 25 + 50	4	3		JLM36200			
VA125M01G60	125	25	25 + 50 + 50	5	3		LLM36600U31X	VAW2N	1200 x 1000 x 400 (47.2 x 39.4 x 15.7) in	125/ 275
VA150M01G60	150	25	25 + 25 + 2x50	6	4		LLM36600U31X			
VA175M01G60	175	25	25 + 3x50	7	4		LLM36600U31X			
VA200M01G60	200	25	25 + 25 + 3x50	8	5		LLM36600U31X			
VA225M01G60	225	25	25 + 4x50	9	5		LLM36600U31X			
VA250M01G60	250	50	5x50	5	5		LLM36600U31X			

PowerLogic™ PFC

Low Voltage Capacitor Bank – Detuned

Network 480V / 60Hz

Tuning order 4.2

Environment

- Installation: Indoor
- Ambient temperature: 15°F to 114.8°F (-10°C to 46°C)
- Humidity: up to 95%
- Maximum altitude: 6500 feet (2000 m)

Standards

- cCSAus approved
- CSA 22.2 No. 190
- UL810, UL508a

Environment certifications

Produced in 14001 certified plants, product environmental profile available, Green premium.

Green Premium™

General characteristics

Electrical Characteristics	
Rated Voltage	480 V / 60 Hz
Capacitance Tolerance	-5%, +10%
Connection type	Three-phase
Power losses	< 6 W/kVAr
Maximum permissible over current	1.3 x In
Maximum permissible over voltage	1.1 x Un, 8 h every 24 h
Enclosure	
Degree of protection	NEMA 1/NEMA 1 Gasket
Colour	RAL 7035
Degree of mechanical resistance	IK10
Controller	
PowerLogic™ PFC	PowerLogic™ PFC controller with embedded Modbus communication
Head circuit breaker protection	
Without incoming circuit breaker	Lug connection
	LV PFC Bank must be protected by a circuit breaker or by a fused disconnector from upstream switchboard
With incoming circuit breaker	PowerPact with rotary handle up to 200kvar. Toggle switch above 200kvar.
Step	
Capacitors Type	PowerLogic™ PFC Capacitor 575V for network voltage 480V
	Maximum overcurrent: 1.8 x In
	3 ph overpressure disconnection system
	Discharge resistor 50V - 1mn
Contactors	Dedicated to capacitor switching
Detuned reactor	PowerLogic™ PFC DR
	Overheating protection by thermostat
Circuit breaker protection	PowerPact
Temperature control	
Double control	By thermostat and by controller
Communication	
ModBUS	RS-485
Installation	
Customer connection	Top Entry
Auxilliary transformer	120V included - no need for additionnal supply
CT not included (see page 20)	5VA - secondary 1 or 5A
	To be installed upstream of the load and capacitor bank
GenSet contact	Available for disconnection with generator
Alarm contact	Available for remote warning signal

Options available on request

- Fixed Stages (by controller programming)
- Custom Staging Ratios
- Bottom Cable entry
- Icc level up to 100kA

PowerLogic™ PFC

Low Voltage Capacitor Bank – Detuned

Network 480V / 60Hz

Tuning order 4.2

Network voltage 480V - 60Hz

References	Power (kvar)	Smallest Step	Resolution	Electrical Steps	Physical Steps	Breaking Capacity	Main Circuit Breaker	Enclosure Type	Enclosure Size (H x W x D) mm	Max Weight (kg / lbs)
With incoming Circuit Breaker										
VA050B40140	050	25	2x25	2	2	65 kA	HLM36100	VAF3P	1300 x 1300 x 400 (51.2 x 51.2 x 15.7) in	265 / 585
VA075B40140	075	25	25 + 50	3	2		HLM36125			
VA100B40140	100	25	2x25 + 50	4	3		JLM36175			
VA125B40140	125	25	25 + 2x50	5	3		JLM36200			
VA150B40140	150	25	2x25 + 2x50	6	4		LLM36600U31X			
VA175B40140	175	25	25 + 3x50	7	4		LLM36600U31X			
VA200B40140	200	50	4x50	4	4		LLM36600U31X			
VA250B40140	250	50	50 + 2x100	5	3		LJM36600U31X	VAF1P	2200 x 1000 x 600 (86.6 x 39.4 x 23.6) in	435 / 959
VA300B40140	300	100	3x100	3	3		LJM36600U31X			460 / 1014
VA350B40140	350	50	50 + 3x100	7	4		PJF36080U31A			500 / 1102
VA400B40140	400	100	4x100	4	4		PJF36100U31A			530 / 1168
VA450B40140	450	50	50 + 4x100	9	5		PJF36100U31A			580 / 1278
VA500B40140	500	100	5x100	5	5		PJF36120U31A			600 / 1322
VA550B40140	550	50	50 + 5x100	11	6		PJF36120U31A	VAF4P	2200 x 1800 x 600 (86.6 x 70.9 x 23.6) in	750 / 1653
VA600B40140	600	100	6x100	6	6		PJF36120CU31A			775 / 1708
VA650B40140	650	50	50 + 6x100	13	7		PJF36120CU31A			820 / 1807
VA700B40140	700	100	7x100	7	7		RKF36160CU31A	VAF5P	2200 x 2000 x 600 (86.6 x 78.7 x 23.6) in	845 / 1862
VA750B40140	750	50	50 + 7x100	15	8		RKF36160CU31A			892 / 1966
VA800B40140	800	100	8x100	8	8		RKF36160CU31A			920 / 2028
VA900B40140	900	100	9x100	9	9		RKF36160CU31A			990 / 2182
VAX00B40140	1000	100	10x100	10	10		RLF36200CU31A			1060 / 2336

References	Power (kvar)	Smallest Step	Resolution	Electrical Steps	Physical Steps	Short-time Withstand Current	Recommended Upstream Protection	Enclosure Type	Enclosure Size (H x W x D) mm	Max Weight (kg / lbs)
With Main Lug										
VA050M40140	050	25	2x25	2	2	25 kA/3 Cycles	HLM36100	VAF3P	1300 x 1300 x 400 (51.2 x 51.2 x 15.7) in	265 / 585
VA075M40140	075	25	25 + 50	3	2		HLM36125			
VA100M40140	100	25	2x25 + 50	4	3		JLM36175			
VA125M40140	125	25	25 + 2x50	5	3		JLM36200			
VA150M40140	150	25	2x25 + 2x50	6	4		LLM36600U31X			
VA175M40140	175	25	25 + 3x50	7	4		LLM36600U31X			
VA200M40140	200	50	4x50	4	4		LLM36600U31X			
VA250M40140	250	50	50 + 2x100	5	3	65 kA/4 Cycles	LJM36600U31X	VAF1P	2200 x 1000 x 600 (86.6 x 39.4 x 23.6) in	400 / 882
VA300M40140	300	100	3x100	3	3		LJM36600U31X			426 / 939
VA350M40140	350	50	50 + 3x100	7	4		PJF36080U31A			471 / 1038
VA400M40140	400	100	4x100	4	4		PJF36100U31A			498 / 1097
VA450M40140	450	50	50 + 4x100	9	5		PJF36100U31A			543 / 1197
VA500M40140	500	100	5x100	5	5		PJF36120U31A			570 / 1256
VA550M40140	550	50	50 + 5x100	11	6		PJF36120U31A	VAF4P	2200 x 1800 x 600 (86.6 x 70.9 x 23.6) in	710 / 1565
VA600M40140	600	100	6x100	6	6		PJF36120CU31A			740 / 1631
VA650M40140	650	50	50 + 6x100	13	7		PJF36120CU31A			785 / 1730
VA700M40140	700	100	7x100	7	7		RKF36160CU31A			810 / 1785
VA750M40140	750	50	50 + 7x100	15	8		RKF36160CU31A			857 / 1889
VA800M40140	800	100	8x100	8	8		RKF36160CU31A			883 / 1946
VA900M40140	900	100	9x100	9	9		RKF36160CU31A			955 / 2105
VAX00M40140	1000	100	10x100	10	10		RLF36200CU31A			1026 / 2261

PowerLogic™ PFC

Low Voltage Capacitor Bank – Detuned

Network 600V / 60Hz

Tuning order 4.2

Environment

- Installation: Indoor
- Ambient temperature: 15°F to 114.8°F (-10°C to 46°C)
- Humidity: up to 95%
- Maximum altitude: 6500 feet (2000 m)

Standards

- cCSAus approved
- CSA 22.2 No. 190
- UL810, UL508a

Environment certifications

Produced in 14001 certified plants, product environmental profile available, Green premium.

Green Premium™

General characteristics

Electrical Characteristics	
Rated Voltage	600V / 60Hz
Capacitance Tolerance	-5%, +10%
Connection type	Three-phase
Power losses	< 6 W per kvar
Maximum permissible over current	1.3 x In
Maximum permissible over voltage	1.1 x Un, 8h per 24h
Enclosure	
Degree of protection	NEMA 1/NEMA 1 Gasket
Colour	RAL 7035
Degree of mechanical resistance	IK10
Controller	
PowerLogic™ PFC	PowerLogic™ PFC controller with embedded Modbus communication
Head circuit breaker protection	
Without incoming circuit breaker	Lug connection
	LV PFC Bank must be protected by a circuit breaker or by a fused disconnector from upstream switchboard
With incoming circuit breaker	PowerPact with rotary handle up to 200kvar. Toggle switch above 200kvar.
Step	
Capacitors Type	PowerLogic™ PFC Capacitor 690V for network voltage 600V
	Maximum overcurrent: 1.8 x In
	3 ph overpressure disconnection system
	Discharge resistor 50V - 1mn
Contactors	Dedicated to capacitor switching
Detuned reactor	PowerLogic™ PFC DR
	Overheating protection by thermostat
Circuit breaker protection	PowerPact
Temperature control	
Double control	By thermostat and by controller
Communication	
ModBUS	RS-485
Installation	
Customer connection	Top entry
Auxilliary transformer	120V included - no need for additionnal supply
CT not included (see page 20)	5VA - secondary 1 or 5A
	To be installed upstream of the load and capacitor bank
GenSet contact	Available for disconnection with generator
Alarm contact	Available for remote warning signal

Options available on request

- Fixed Stages (by controller programming)
- Custom Staging Ratios
- Bottom Cable entry
- Icc level up to 65kA
- Drip Hood

PowerLogic™ PFC

Low Voltage Capacitor Bank – Detuned

Network 600V / 60Hz

Tuning order 4.2

Network voltage 600V - 60Hz

References	Power (kvar)	Smallest Step	Resolution	Electrical Steps	Physical Steps	Breaking Capacity	Main Circuit Breaker	Enclosure Type	Enclosure Size (H x W x D) mm	Max Weight (kg / lbs)
With incoming Circuit Breaker										
VA050B41G60	050	25	2x25	2	2	50 kA	HLM36100	VAF3P	1300 x 1300 x 400 (51.2 x 51.2 x 15.7) in	265 / 585
VA075B41G60	075	25	25 + 50	3	2		HLM36125			
VA100B41G60	100	25	2x25 + 50	4	3		JLM36175			
VA125B41G60	125	25	25 + 2x50	5	3		JLM36200			
VA150B41G60	150	25	2x25 + 2x50	6	4		LLM36600U31X			
VA175B41G60	175	25	25 + 3x50	7	4		LLM36600U31X			
VA200B41G60	200	50	4x50	4	4		LLM36600U31X			
VA250B41G60	250	50	50 + 2x100	5	3		LLM36600U31X	VAF1P	2200 x 1000 x 600 (86.6 x 39.4 x 23.6) in	435 / 959
VA300B41G60	300	100	3x100	3	3		LLM36600U31X			460 / 1014
VA350B41G60	350	50	50 + 3x100	7	4		LLM36600U31X			500 / 1102
VA400B41G60	400	100	4x100	4	4		LLM36600U31X			530 / 1168
VA450B41G60	450	50	50 + 4x100	9	5		PKF36100U31A			580 / 1278
VA500B41G60	500	100	5x100	5	5		PKF36100U31A			600 / 1322
VA550B41G60	550	50	50 + 5x100	11	6		PKF36100U31A	VAF4P	2200 x 1800 x 600 (86.6 x 70.9 x 23.6) in	750 / 1653
VA600B41G60	600	100	6x100	6	6		PKF36120U31A			775 / 1708
VA650B41G60	650	50	50 + 6x100	13	7		PKF36120U31A			820 / 1807
VA700B41G60	700	100	7x100	7	7		PKF36120CU31A			845 / 1862
VA750B41G60	750	50	50 + 7x100	15	8		PKF36120CU31A			892 / 1966
VA800B41G60	800	100	8x100	8	8		PKF36120CU31A			920 / 2028
VA900B41G60	900	100	9x100	9	9		RLF36160CU31A	VAF5P	2200 x 2000 x 600 (86.6 x 78.7 x 23.6) in	990 / 2182
VAX00B41G60	1000	100	10x100	10	10		RLF36160CU31A			1060 / 2336

References	Power (kvar)	Smallest Step	Resolution	Electrical Steps	Physical Steps	Short-time Withstand Current	Recommended Upstream Protection	Enclosure Type	Enclosure Size (H x W x D) mm	Max Weight (kg / lbs)
With Main Lug										
VA050M41G60	050	25	2x25	2	2	25 kA/3 cycles	HLM36100	VAF3P	1300 x 1300 x 400 (51.2 x 51.2 x 15.7) in	265 / 585
VA075M41G60	075	25	25 + 50	3	2		HLM36125			
VA100M41G60	100	25	2x25 + 50	4	3		JLM36175			
VA125M41G60	125	25	25 + 2x50	5	3		JLM36200			
VA150M41G60	150	25	2x25 + 2x50	6	4		LLM36600U31X			
VA175M41G60	175	25	25 + 3x50	7	4		LLM36600U31X			
VA200M41G60	200	50	4x50	4	4		LLM36600U31X			
VA250M41G60	250	50	50 + 2x100	5	3	65 kA/4 cycles	LLM36600U31X	VAF1P	2200 x 1000 x 600 (86.6 x 39.4 x 23.6) in	400 / 882
VA300M41G60	300	100	3x100	3	3		LLM36600U31X			426 / 939
VA350M41G60	350	50	50 + 3x100	7	4		LLM36600U31X			471 / 1038
VA400M41G60	400	100	4x100	4	4		LLM36600U31X			498 / 1097
VA450M41G60	450	50	50 + 4x100	9	5		PKF36100U31A			543 / 1197
VA500M41G60	500	100	5x100	5	5		PKF36100U31A			570 / 1256
VA550M41G60	550	50	50 + 5x100	11	6		PKF36100U31A	VAF4P	2200 x 1800 x 600 (86.6 x 70.9 x 23.6) in	710 / 1565
VA600M41G60	600	100	6x100	6	6		PKF36120U31A			740 / 1631
VA650M41G60	650	50	50 + 6x100	13	7		PKF36120U31A			785 / 1730
VA700M41G60	700	100	7x100	7	7		PKF36120CU31A			810 / 1785
VA750M41G60	750	50	50 + 7x100	15	8		PKF36120CU31A			857 / 1889
VA800M41G60	800	100	8x100	8	8		PKF36120CU31A			883 / 1946
VA900M41G60	900	100	9x100	9	9		RLF36160CU31A			955 / 2105
VAX00M41G60	1000	100	10x100	10	10		RLF36160CU31A			1026 / 2261

PowerLogic™ PFC

Low Voltage Capacitor Bank – Smart

Network 480V / 60Hz

Tuning order 4.2

Environment

- Installation: Indoor
- Ambient temperature: 15°F to 114.8°F (-10°C to 46°C)
- Humidity: up to 95%
- Maximum altitude: 6500 feet (2000 m)

Standards

- cCSAus approved
- CSA 22.2 No. 190
- UL810, UL508a

Environment certifications

Produced in 14001 certified plants, product environmental profile available, Green premium.

Green Premium™

EcoStruxure™
Innovation At Every Level

- Embedded environmental sensors with EcoStruxure™ Panel Server
- Industry leading diagnostics and IOT connectivity
- Ready to connect to any system with Ethernet, TCP/IP

General characteristics

Electrical Characteristics	
Rated Voltage	480 V / 60 Hz
Capacitance Tolerance	-5%, +10%
Connection type	Three-phase
Power losses	< 6 W/kVAr
Maximum permissible over current	1.3 x In
Maximum permissible over voltage	1.1 x Un, 8 h every 24 h
Enclosure	
Degree of protection	NEMA 1/NEMA 1 Gasket
Colour	RAL 7035
Degree of mechanical resistance	IK10
Controller	
PowerLogic™ PFC	PowerLogic™ PFC controller with embedded Modbus communication
Head circuit breaker protection	
Without incoming circuit breaker	Lug connection
	LV PFC Bank must be protected by a circuit breaker or by a fused disconnector from upstream switchboard
With incoming circuit breaker	PowerPact with rotary handle up to 200kvar. Toggle switch above 200kvar.
Step	
Capacitors Type	PowerLogic™ PFC Capacitor 575V for network voltage 480V
	Maximum overcurrent: 1.8 x In
	3 ph overpressure disconnection system
	Discharge resistor 50V - 1mn
Contactors	Dedicated to capacitor switching
Detuned reactor	PowerLogic™ PFC DR
	Overheating protection by thermostat
Circuit breaker protection	PowerPact
Temperature control	
Double control	By thermostat and by controller
Communication	
ModBUS	RS-485
Installation	
Customer connection	Top Entry
Auxilliary transformer	120V included - no need for additionnal supply
CT not included (see page 20)	5VA - secondary 1 or 5A
	To be installed upstream of the load and capacitor bank
GenSet contact	Available for disconnection with generator
Alarm contact	Available for remote warning signal

Options available on request

- Fixed Stages (by controller programming)
- Custom Staging Ratios
- Bottom Cable entry
- Icc level up to 100kA

PowerLogic™ PFC

Low Voltage Capacitor Bank – Smart

Network 480V / 60Hz

Tuning order 4.2

Network voltage 480V - 60Hz

References	Power (kvar)	Smallest Step	Resolution	Electrical Steps	Physical Steps	Breaking Capacity	Main Circuit Breaker	Enclosure Type	Enclosure Size (H x W x D) mm	Max Weight (kg / lbs)
With incoming Circuit Breaker										
VA050B4014S	050	25	2x25	2	2	65 kA	HLM36100	VAF3P	1300 x 1300 x 400 (51.2 x 51.2 x 15.7) in	265 / 585
VA075B4014S	075	25	25 + 50	3	2		HLM36125			
VA100B4014S	100	25	2x25 + 50	4	3		JLM36175			
VA125B4014S	125	25	25 + 2x50	5	3		JLM36200			
VA150B4014S	150	25	2x25 + 2x50	6	4		LLM36600U31X			
VA175B4014S	175	25	25 + 3x50	7	4		LLM36600U31X			
VA200B4014S	200	50	4x50	4	4		LLM36600U31X			
VA250B4014S	250	50	50 + 2x100	5	3		LJM36600U31X	VAF1P	2200 x 1000 x 600 (86.6 x 39.4 x 23.6) in	435 / 959
VA300B4014S	300	100	3x100	3	3		LJM36600U31X			460 / 1014
VA350B4014S	350	50	50 + 3x100	7	4		PJF36080U31A			500 / 1102
VA400B4014S	400	100	4x100	4	4		PJF36100U31A			530 / 1168
VA450B4014S	450	50	50 + 4x100	9	5		PJF36100U31A			580 / 1278
VA500B4014S	500	100	5x100	5	5		PJF36120U31A			600 / 1322
VA550B4014S	550	50	50 + 5x100	11	6		PJF36120U31A	VAF4P	2200 x 1800 x 600 (86.6 x 70.9 x 23.6) in	750 / 1653
VA600B4014S	600	100	6x100	6	6		PJF36120CU31A			775 / 1708
VA650B4014S	650	50	50 + 6x100	13	7		PJF36120CU31A			820 / 1807
VA700B4014S	700	100	7x100	7	7		RKF36160CU31A	VAF5P	2200 x 2200 x 600 (86.6 x 86.6 x 23.6) in	845 / 1862
VA750B4014S	750	50	50 + 7x100	15	8		RKF36160CU31A			892 / 1966
VA800B4014S	800	100	8x100	8	8		RKF36160CU31A			920 / 2028
VA900B4014S	900	100	9x100	9	9		RKF36160CU31A			990 / 2182
VAX00B4014S	1000	100	10x100	10	10		RLF36200CU31A			1060 / 2336

References	Power (kvar)	Smallest Step	Resolution	Electrical Steps	Physical Steps	Short-time Withstand Current	Recommended Upstream Protection	Enclosure Type	Enclosure Size (H x W x D) mm	Max Weight (kg / lbs)
With Main Lug										
VA050M4014S	050	25	2x25	2	2	25 kA/3 Cycles	HLM36100	VAF3P	1300 x 1300 x 400 (51.2 x 51.2 x 15.7) in	265 / 585
VA075M4014S	075	25	25 + 50	3	2		HLM36125			
VA100M4014S	100	25	2x25 + 50	4	3		JLM36175			
VA125M4014S	125	25	25 + 2x50	5	3		JLM36200			
VA150M4014S	150	25	2x25 + 2x50	6	4		LLM36600U31X			
VA175M4014S	175	25	25 + 3x50	7	4		LLM36600U31X			
VA200M4014S	200	50	4x50	4	4		LLM36600U31X			
VA250M4014S	250	50	50 + 2x100	5	3	65 kA/4 Cycles	LJM36600U31X	VAF1P	2200 x 1000 x 600 (86.6 x 39.4 x 23.6) in	400 / 882
VA300M4014S	300	100	3x100	3	3		LJM36600U31X			426 / 939
VA350M4014S	350	50	50 + 3x100	7	4		PJF36080U31A			471 / 1038
VA400M4014S	400	100	4x100	4	4		PJF36100U31A			498 / 1097
VA450M4014S	450	50	50 + 4x100	9	5		PJF36100U31A			543 / 1197
VA500M4014S	500	100	5x100	5	5		PJF36120U31A			570 / 1256
VA550M4014S	550	50	50 + 5x100	11	6		PJF36120U31A	VAF4P	2200 x 1800 x 600 (86.6 x 70.9 x 23.6) in	710 / 1565
VA600M4014S	600	100	6x100	6	6		PJF36120CU31A			740 / 1631
VA650M4014S	650	50	50 + 6x100	13	7		PJF36120CU31A			785 / 1730
VA700M4014S	700	100	7x100	7	7		RKF36160CU31A			810 / 1785
VA750M4014S	750	50	50 + 7x100	15	8		RKF36160CU31A			857 / 1889
VA800M4014S	800	100	8x100	8	8		RKF36160CU31A			883 / 1946
VA900M4014S	900	100	9x100	9	9		RKF36160CU31A			955 / 2105
VAX00M4014S	1000	100	10x100	10	10		RLF36200CU31A			1026 / 2261

PowerLogic™ PFC

Low Voltage Capacitor Bank – Smart

Network 600V / 60Hz

Tuning order 4.2

Environment

- Installation: Indoor
- Ambient temperature: 15°F to 114.8°F (-10°C to 46°C)
- Humidity: up to 95%
- Maximum altitude: 6500 feet (2000 m)

Standards

- cCSAus approved
- CSA 22.2 No. 190
- UL810, UL508a

Environment certifications

Produced in 14001 certified plants, product environmental profile available, Green premium.

Green Premium™

EcoStruxure™
Innovation At Every Level

- Embedded environmental sensors with EcoStruxure™ Panel Server
- Industry leading diagnostics and IOT connectivity
- Ready to connect to any system with Ethernet, TCP/IP

General characteristics

Electrical Characteristics	
Rated Voltage	600V / 60Hz
Capacitance Tolerance	-5% +10%
Connection type	Three-phase
Power losses	< 6 W per kvar
Maximum permissible over current	1.3 x In
Maximum permissible over voltage	1.1 x Un, 8h per 24h
Enclosure	
Degree of protection	NEMA 1/NEMA 1 Gasket
Colour	RAL 7035
Degree of mechanical resistance	IK10
Controller	
PowerLogic™ PFC	PowerLogic™ PFC controller with embedded Modbus communication
Head circuit breaker protection	
Without incoming circuit breaker	Lug connection
	LV PFC Bank must be protected by a circuit breaker or by a fused disconnector from upstream switchboard
With incoming circuit breaker	PowerPact with rotary handle up to 200kvar. Toggle switch above 200kvar.
Step	
Capacitors Type	PowerLogic™ PFC Capacitor 690V for network voltage 600V
	Maximum overcurrent: 1.8 x In
	3 ph overpressure disconnection system
	Discharge resistor 50V - 1mn
Contactors	Dedicated to capacitor switching
Detuned reactor	PowerLogic™ PFC DR
	Overheating protection by thermostat
Circuit breaker protection	PowerPact
Temperature control	
Double control	By thermostat and by controller
Communication	
ModBUS	RS-485
Installation	
Customer connection	Top entry
Auxilliary transformer	120V included - no need for additionnal supply
CT not included (see page 20)	5VA - secondary 1 or 5A
	To be installed upstream of the load and capacitor bank
GenSet contact	Available for disconnection with generator
Alarm contact	Available for remote warning signal

Options available on request

- Fixed Stages (by controller programming)
- Custom Staging Ratios
- Bottom Cable entry
- Icc level up to 65kA
- Drip Hood

PowerLogic™ PFC

Low Voltage Capacitor Bank – Smart

Network 600V / 60Hz

Tuning order 4.2

Network voltage 600V - 60Hz

References	Power (kvar)	Smallest Step	Resolution	Electrical Steps	Physical Steps	Breaking Capacity	Main Circuit Breaker	Enclosure Type	Enclosure Size (H x W x D) mm	Max Weight (kg / lbs)
With incoming Circuit Breaker										
VA050B41G6S	050	25	2x25	2	2	50 kA	HLM36100	VAF3P	1300 x 1300 x 400 (51.2 x 51.2 x 15.7) in	265 / 585
VA075B41G6S	075	25	25 + 50	3	2		HLM36125			
VA100B41G6S	100	25	2x25 + 50	4	3		JLM36175			
VA125B41G6S	125	25	25 + 2x50	5	3		JLM36200			
VA150B41G6S	150	25	2x25 + 2x50	6	4		LLM36600U31X			
VA175B41G6S	175	25	25 + 3x50	7	4		LLM36600U31X			
VA200B41G6S	200	50	4x50	4	4		LLM36600U31X			
VA250B41G6S	250	50	50 + 2x100	5	3		LLM36600U31X	VAF1P	2200 x 1000 x 600 (86.6 x 39.4 x 23.6) in	435 / 959
VA300B41G6S	300	100	3x100	3	3		LLM36600U31X			460 / 1014
VA350B41G6S	350	50	50 + 3x100	7	4		LLM36600U31X			500 / 1102
VA400B41G6S	400	100	4x100	4	4		LLM36600U31X			530 / 1168
VA450B41G6S	450	50	50 + 4x100	9	5		PKF36100U31A			580 / 1278
VA500B41G6S	500	100	5x100	5	5		PKF36100U31A			600 / 1322
VA550B41G6S	550	50	50 + 5x100	11	6		PKF36100U31A	VAF4P	2200 x 1800 x 600 (86.6 x 70.9 x 23.6) in	750 / 1653
VA600B41G6S	600	100	6x100	6	6		PKF36120U31A			775 / 1708
VA650B41G6S	650	50	50 + 6x100	13	7		PKF36120U31A			820 / 1807
VA700B41G6S	700	100	7x100	7	7		PKF36120CU31A			845 / 1862
VA750B41G6S	750	50	50 + 7x100	15	8		PKF36120CU31A			892 / 1966
VA800B41G6S	800	100	8x100	8	8		PKF36120CU31A			920 / 2028
VA900B41G6S	900	100	9x100	9	9		RLF36160CU31A	VAF5P	2200 x 2000 x 600 (86.6 x 78.7 x 23.6) in	990 / 2182
VAX00B41G6S	1000	100	10x100	10	10		RLF36160CU31A			1060 / 2336

References	Power (kvar)	Smallest Step	Resolution	Electrical Steps	Physical Steps	Short-time Withstand Current	Recommended Upstream Protection	Enclosure Type	Enclosure Size (H x W x D) mm	Max Weight (kg / lbs)
With Main Lug										
VA050M41G6S	050	25	2x 25	2	2	25 kA/3 cycles	HLM36100	VAF3P	1300 x 1300 x 400 (51.2 x 51.2 x 15.7) in	265 / 585
VA075M41G6S	075	25	25 + 50	3	2		HLM36125			
VA100M41G6S	100	25	2x25 + 50	4	3		JLM36175			
VA125M41G6S	125	25	25 + 2x50	5	3		JLM36200			
VA150M41G6S	150	25	2x25 + 2x50	6	4		LLM36600U31X			
VA175M41G6S	175	25	25 + 3x50	7	4		LLM36600U31X			
VA200M41G6S	200	50	4x50	4	4		LLM36600U31X			
VA250M41G6S	250	50	50 + 2x100	5	3	65 kA/4 cycles	LLM36600U31X	VAF1P	2200 x 1000 x 600 (86.6 x 39.4 x 23.6) in	400 / 882
VA300M41G6S	300	100	3x100	3	3		LLM36600U31X			426 / 939
VA350M41G6S	350	50	50 + 3x100	7	4		LLM36600U31X			471 / 1038
VA400M41G6S	400	100	4x100	4	4		LLM36600U31X			498 / 1097
VA450M41G6S	450	50	50 + 4x100	9	5		PKF36100U31A			543 / 1197
VA500M41G6S	500	100	5x100	5	5		PKF36100U31A			570 / 1256
VA550M41G6S	550	50	50 + 5x100	11	6		PKF36100U31A	VAF4P	2200 x 1800 x 600 (86.6 x 70.9 x 23.6) in	710 / 1565
VA600M41G6S	600	100	6x100	6	6		PKF36120U31A			740 / 1631
VA650M41G6S	650	50	50 + 6x100	13	7		PKF36120U31A			785 / 1730
VA700M41G6S	700	100	7x100	7	7		PKF36120CU31A			810 / 1785
VA750M41G6S	750	50	50 + 7x100	15	8		PKF36120CU31A			857 / 1889
VA800M41G6S	800	100	8x100	8	8		PKF36120CU31A			883 / 1946
VA900M41G6S	900	100	9x100	9	9		RLF36160CU31A			955 / 2105
VAX00M41G6S	1000	100	10x100	10	10		RLF36160CU31A			1026 / 2261

PowerLogic™ PFC offer
PowerLogic™ PFC accessories

A current transformer is required for automatic control

In order to have automatic control, a current transformer must be ordered in addition to the PFC bank.

A current transformer (not included) is necessary to provide accurate network information to the PowerLogic™ PFC's controller in order to apply the correct quantity of kVAR at any given time.

Note: CT must be sized to your network and have a secondary rating of 5 A.

CT catalog number: TRAI****SC## where **** is current rate code of bus/cable and ## is window size code. Codes are listed in the table below.

E.g. TRAI1000SC07 is a CT for 1000 A bus with 7" x 4" window.

CT selection table

Current rating of Bus/ Cable		Window size	
Amperes	Rating Code	7" x 4" size code	11" x 4" size code
600	0600	07	N/A
800	0800	07	N/A
1000	1000	07	N/A
1200	1200	07	11
1500	1500	07	N/A
1600	1600	07	N/A
2000	2000	07	11
2500	2500	07	11
3000	3000	07	11
3500	3500	07	11
4000	4000	07	11
5000	5000	N/A	11
6000	6000	N/A	11

Floor mounting of VAW1N and VAW2N models

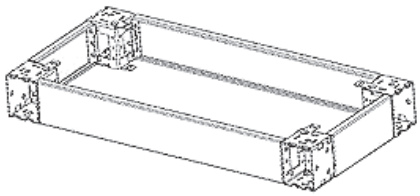

For enclosure	Order the following parts
VAW1N	NSYSPF8100 + NSYSPS4100
VAW2N	NSYSPF10100 + NSYSPS4100

PowerLogic™ PFC offer
Construction of references

PowerLogic™ PFC Standard, Detuned and Smart

V	A	300	M	4	01	4	S
Range	Compensation type	Power (kvar)	Incoming	Tuning rank	NEMA	Voltage	Communication
V Varset	**A** Automatic	050 075 100 125 150 175 200 250 300 350 400 450 500 550 600 650 700 till X00	**M** MLO **B** CB	**4** 4.2 **0** Standard	**01** **1G** with Gasket **12** Future **3R** Future	**4** 480V **6** 600V	**0** Modbus **S** Smart brick

PowerLogic™ PFC offer
Typical dimensions

VAW1N and VAW2N

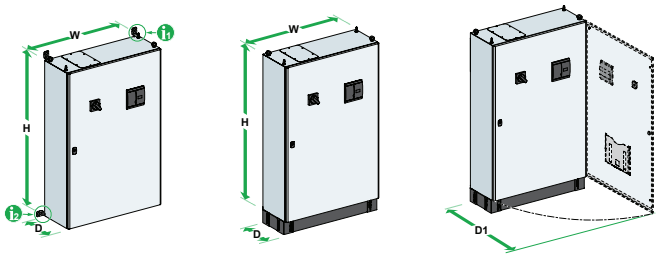

VAF3P

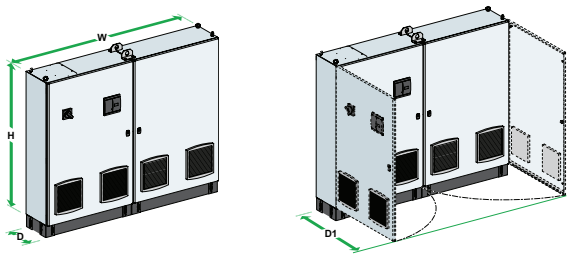

Dimensions and weight

Type	Dimensions (mm / inches)			
	H	W	D	D1
VAW1N	850/33.5	800/31.5	400/15.7	1200/47.2
VAW2N	1200/47.2	1000/39.4	400/15.7	900/35.4
VAF3P	1300/51.2	1300/51.2	400/15.7	1200/47.2
VAF1P	2200/86.6	1000/39.4	600/23.6	1100/43.3
VAF4P	2200/86.6	1800/70.9	600/23.6	1400/55.1
VAF5P	2200/86.6	2000/78.7	600/23.6	1400/55.1

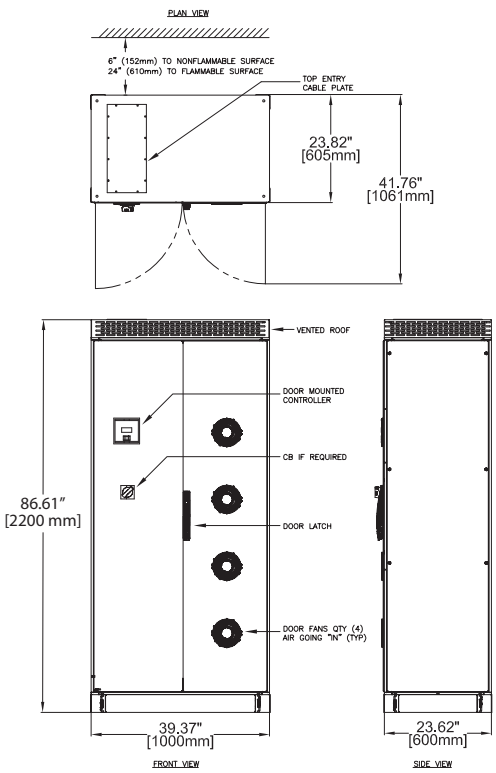

VAF1P

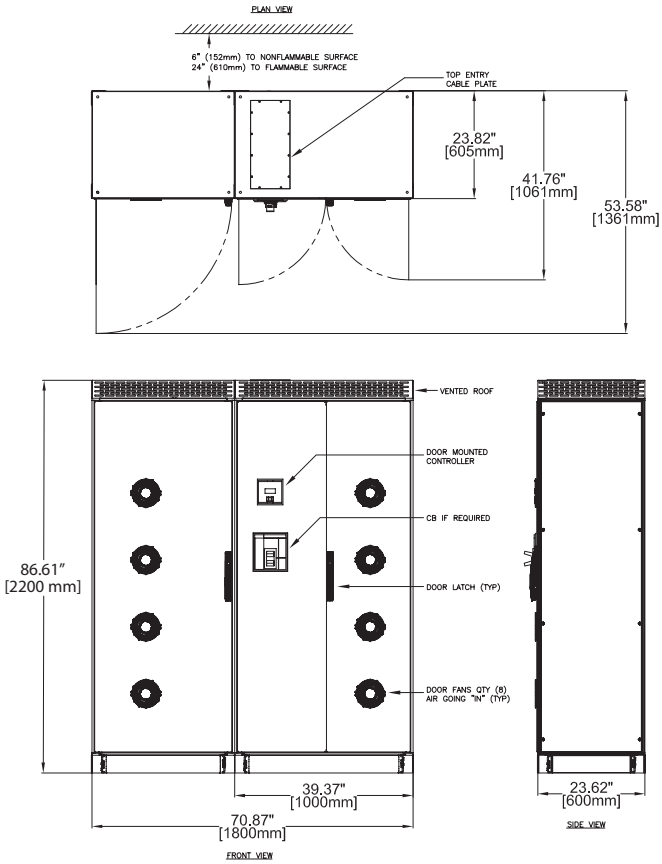

VAF4P

Power factor of most common receiving devices

Practical calculation of reactive power

Type of circuit	Apparent power S (kVA)	Active power P (kW)	Reactive power Q (kVAr)
Single phase (Ph + N) Single phase (Ph + Ph)	S = V x I S = U x I	P = V x I x cos φ P = U x I x cos φ	P = V x I x sin φ P = U x I x sin φ
Example: 5 kW load Cos φ= 0.5	10 kVA	5 kW	8.7 kVAr
Three-phase (3Ph or 3Ph+N)	S = √3 x U x I	P = √3 x U x I x cos φ	Q = √3 x U x I x sin φ
Example of Motor with Pn = 51kW cos φ = 0.86 efficiency = 0.91	65 kVA	56 kW	33 kVAr

Calculations in the three-phase example were as follows:

Pn = power supplied to the rotary axis = 51 kW

P = active consumed power = Pn/ρ = 56 kW

S = apparent power = P/cos φ = P/0.86 = 65 kVA

Hence:

$Q = \sqrt{(S^2 - P^2)} = \sqrt{(65^2 - 56^2)} = 33$ kVAr

The average power factor values for various loads are given below.

Power factor of the most common loads

Device	Load	cos φ	tg φ
Ordinary asynchronous motor	0%	0.17	5.8
	25%	0.55	1.52
	50%	0.73	0.94
	75%	0.8	0.75
	100%	0.85	0.62
Incandescent lamps		1	0
Fluorescent lamps		0.5	1.73
Discharge lamps		0.4 to 0.6	2.29 to 1.33
Resistance furnaces		1	0
Induction furnaces		0.85	0.62
Dielectric heating furnaces		0.85	0.62
Resistance welding machine		0.8 to 0.9	0.75 to 0.48
Single-phase static arc-welding centres		0.5	1.73
Rotary arc-welding sets		0.7 to 0.9	1.02
Arc-welding transformers/rectifiers		0.7 to 0.9	1.02 to 0.75
Arc furnaces		0.8	0.75

Cos φ of the most commonly-used devices.

PowerLogic™ PFC series
VL6, VL12

PowerLogic™ PFC has all what you need for the simple and efficient operation of your automatic power factor correction equipment to maintain your power factor.

It is a simple and intelligent relay which measure, monitor and controls the reactive energy. Easy commissioning, step size detection and monitoring makes it different from others in the market.

PowerLogic™ PFC VL6, VL12

Capacitor bank step monitoring
- Monitoring of all the connected capacitor steps
- Real time power in "kvar" for the connected steps
- Remaining step capacity per step as a % of the original power since installation
- Derating since installation
- Number of switching operations of every connected step

System Measurement and monitoring
- THD(u) and THD(u) Spectrum 3rd to 19th – Measurement, Display and Alarm
- Measurement of DQ – "kvar" required to achieve target cos phi
- Present cabinet temperature and maximum recorded temperature
- System parameters – Voltage, Current, Active, reactive and apparent power
- Large LCD display to monitor real step status and other parameters

Easy Commissioning
- Automatic Initialization and automatic step detection to do a auto commissioning
- Automatic wiring correction - voltage and current input wiring correction
- 1 A or 5 A CT secondary compatible

Flexibility to the panel builder and retrofitting
- No step sequence restriction like in the traditional relays
- Any step sequences with auto detect. No programming needed
- Easy to retrofit the faulty capacitor with different power
- Quick and simple mounting and wiring
- Connect to the digitized Schneider Electric solutions through RS-485 communication in Modbus protocol
- Seamless connection to the Schneider software and gateways

Do more with PowerLogic™ PFC
- Programmable alarms with last 5 alarms log
- Suitable for medium voltage applications
- Suitable for 4 quadrant operations
- Dual cos phi control through digital inputs or export power detection
- Dedicated alarm and fan control relays
- Advance expert programming Menu to configure the controller the way you need
- New control algorithm designed to reduce the number of switching operations and quickly attain the targeted power factor

Alarms
- Faulty Step
- Configurable alarm for step derating
- THDu Limit alarm
- Temperature alarm
- Self correction by switching off the steps in the event of THDu alarm, temperature alarm and overload limit alarm
- Under compensation alarm
- Under/Over Voltage Alarm
- Low/High Current Alarm
- Overload limit alarm
- Hunting alarm
- Maximum operational limits - Time and number of switching

Range

Type	Number of step output contacts	Part number
VL6	06	VPL06N
VL12	12	VPL12N

PowerLogic™ PFC series
VL6, VL12

General characteristics

Voltage and current Input	
Direct supply voltage	90 – 550 V, 1ph, 50/60 Hz
	VA Burden: 6 VA
	300 V LN / 519 V LL CAT III or 550 V CAT II
Type of input connection	Phase to phase or phase to neutral
Protection against voltage dips	Automatic disconnection of steps for dips > 15 ms (protection of capacitor)
CT secondary	1A or 5A compatible
CT primary range	Up to 9600 A
Current	15 mA – 6 A, 1PH,
	VA Burden : < 1 VA
Connection terminals	Screw type, pluggable. Section: 0.2 – 2.5 mm^2 (0.2 – 1 mm^2 for Modbus and digital inputs)
Power factor settings & algorithm selection	
Regulation setting - Programmable	From Cos Phi 0.7c to 0.7i
Reconnection time -Programmable	From 1 to 6500 s
Response time -Programmable	From 1 to 6500 s
Possibility of dual cos Phi target	Yes, Through Digital Input or if export power detected
Program algorithm	AUTOMATIC (best fit) - Default
	LIFO
	PROGRESSIVE
Import export application compatibility	4- Quadrant operation for generator application
Program intelligence	
Automatic Initialization and Automatic bank detection	Yes
Detection and display of power, number of switching & derating of all connected steps	Yes
Capacitor bank step sequence	Any sequence. No restriction/limitation on sequence

Dimensions

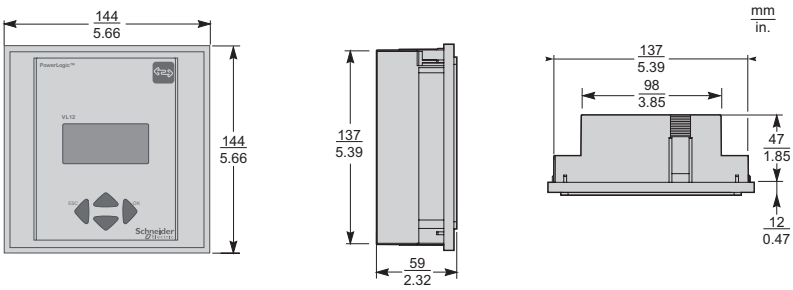

Mounting

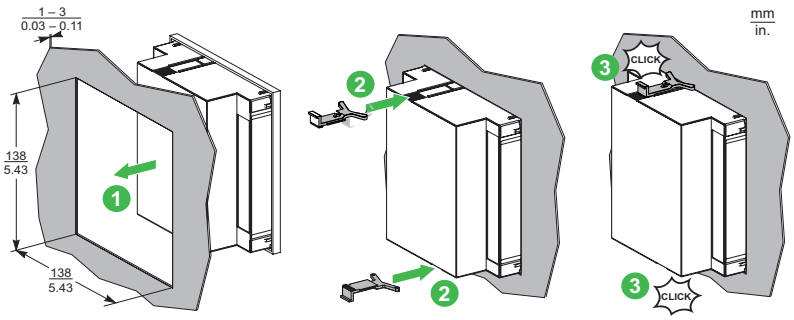

PowerLogic™ PFC series
VL6, VL12

Phase-to-Neutral with VTs (3PH4W)

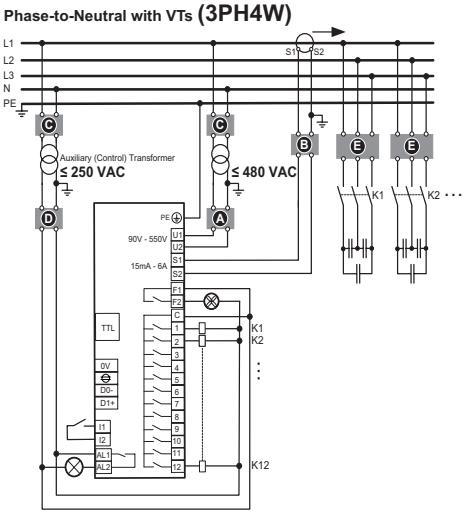

Phase-to-Phase with VTs (3PH3W)

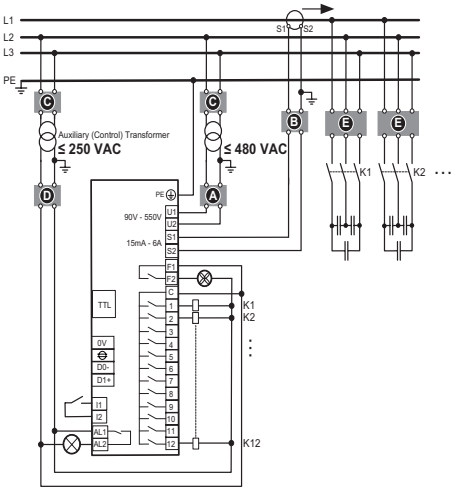

- **A** Upstream protection
  Voltage input: 2A certified circuit breakers or fuses
- **B** Shorting block for CT
- **C** VT primary fuses and disconnect switch
- **D** Output relays: 10 A (max.) certified circuit breakers or fuses (Applicable for applications with voltage transformers only)
- **E** Capacitor primary fuses or CB's

General characteristics	
Alarm and control	
Control outputs (step output)	VL6: 6 relays VL12: 12 relays (NO contact)
	250 V LN or LL (CAT III)
	DC Rating : 48 V DC / 1 A
	AC Rating : 250 V AC / 5 A
	Common root: 10 A max.
Dedicated fan control relay	Yes. Normal open contact (NO)
	48 V DC / 1 A, 250 V AC / 5 A
Alarm contact	The relay contact is open when the controller is energized with no alarm and will close in the event of an alarm.The relay is a NC (Normally Close) when the controller is not energized.
	Rating : 48 V DC / 1 A, 250 V AC / 5 A
Digital Input for Cos phi2 target	Dry contact (internal supply 5 V, 10 mA)
Modbus RS-485 serial port (RTU)	Line polarization / termination, not included
Communication protocol	Modbus
Interface TTL	Service port. Only for internal use
Internal Temperature probe	Yes
Display and measurement	
Display	LCD graphic 56 x 25 (Backlit)
Alarms log	5 last alarms
Voltage Harmonic Distortion measurement	THDu ; Individual odd harmonics distortion from H3 to H19
Measurement displayed and accuracy	Voltage, Current & Frequency: ±1%
	Energy measurements, Cos Phi, THD(u): ±2%
	Individual Voltage harmonics (H3 to H19): ±3%
	Temperature measurement : ±3 °C
Testing standards and conformities	
Standards	IEC 61010-1
	IEC 61000 6-2
	IEC 61000 6-4: level B
	IEC 61326-1
	UL 61010
Conformity and listing	Conformity and listing CE, NRTL, c NRTL, EAC
Mechanical specifications	
Case	Front: Instrument case plastic RAL 7016
	Rear: Metal
Degree of Protection	Front: IP41, (IP54 by using a gasket)
	Rear: IP20
Weight	0.6 kg
Size (H x W x D)	144 x 144 x 58 mm 5.7 x 5.7 x 2.9 "
Panel Cutout	138 x 138 (+0.5) mm, 5.4 x 5.4 ", thickness 1 – 3 mm
Panel Mounting	Flush mounting
Storage condition	
Temperature for operation	-20 °C +60 °C
Storage	-40 °C +85 °C
Humidity	0% - 95%, without condensation for operation and storage
Maximum pollution degree	2
Maximum altitude	≤ 2000m

Calculation of reactive power
Selection Table

Calculation of reactive power: Selection table

The table gives a coefficient, according to the cos φ of the installation before and after power factor correction. Multiplying this figure by the active power gives the reactive power to be installed.

Before compensation		Capacitor power in kVAr to be installed per kW of load to raise the power factor (cos φ or tg φ)													
tg φ	**cos φ**	**tg φ**	0.75	0.59	0.48	0.45	0.42	0.39	0.36	0.32	0.29	0.25	0.20	0.14	0.00
		cos φ	0.8	0.86	0.9	0.91	0.92	0.93	0.94	0.95	0.96	0.97	0.98	0.99	1
2.29	0.40		1.541	1.698	1.807	1.836	1.865	1.896	1.928	1.963	2.000	2.041	2.088	2.149	2.291
2.22	0.40		1.475	1.631	1.740	1.769	1.799	1.829	1.862	1.896	1.933	1.974	2.022	2.082	2.225
2.16	0.42		1.411	1.567	1.676	1.705	1735	1.766	1.798	1.832	1.869	1.910	1.958	2.018	2.161
2.10	0.43		1.350	1.506	1.615	1.644	1.674	1.704	1.737	1.771	1.808	1.849	1.897	1.957	2.100
2.04	0.44		1.291	1.448	1.557	1.585	1.615	1.646	1.678	1.712	1.749	1.790	1.838	1.898	2.041
1.98	0.45		1.235	1.391	1.500	1.529	1.559	1.589	1.622	1.656	1.693	1.734	1.781	1.842	1.985
1.93	0.46		1.180	1.337	1.446	1.475	1.504	1.535	1.567	1.602	1.639	1.680	1.727	1.788	1.930
1.88	0.47		1.128	1.285	1.394	1.422	1.452	1.483	1.515	1.549	1.586	1.627	1.675	1.736	1.878
1.83	0.48		1.078	1.234	1.343	1.372	1.402	1.432	1.465	1.499	1.536	1.577	1.625	1.685	1.828
1.78	0.49		1.029	1.186	1.295	1.323	1.353	1.384	1.416	1.450	1.487	1.528	1.576	1.637	1.779
1.73	0.5		0.982	1.139	1.248	1.276	1.306	1.337	1.369	1.403	1.440	1.481	1.529	1.590	1.732
1.69	0.51		0.937	1.093	1.202	1.231	1.261	1.291	1.324	1.358	1.395	1.436	1.484	1.544	1.687
1.64	0.52		0.893	1.049	1.158	1.187	1.217	1.247	1.280	1.314	1.351	1.392	1.440	1.500	1.643
1.60	0.53		0.850	1.007	1.116	1.144	1.174	1.205	1.237	1.271	1.308	1.349	1.397	1.458	1.600
1.56	0.54		0.809	0.965	1.074	1.103	1.133	1.163	1.196	1.230	1.267	1.308	1.356	1.416	1.559
1.52	0.55		0.768	0.925	1.034	1.063	1.092	1.123	1.156	1.190	1.227	1.268	1.315	1.376	1.518
1.48	0.56		0.729	0.886	0.995	1.024	1.053	1.084	1.116	1.151	1.188	1.229	1.276	1.337	1.479
1.44	0.57		0.691	0.848	0.957	0.986	1.015	1.046	1.079	1.113	1.150	1.191	1.238	1.299	1.441
1.40	0.58		0.655	0.811	0.920	0.949	0.969	1.009	1.042	1.076	1.113	1.154	1.201	1.262	1.405
1.37	0.59		0.618	0.775	0.884	0.913	0.942	0.973	1.006	1.040	1.077	1.118	1.165	1.226	1.368
1.33	0.6		0.583	0.740	0.849	0.878	0.907	0.938	0.970	1.005	1.042	1.083	1.130	1.191	1.333
1.30	0.61		0.549	0.706	0.815	0.843	0.873	0.904	0.936	0.970	1.007	1.048	1.096	1.157	1.299
1.27	0.62		0.515	0.672	0.781	0.810	0.839	0.870	0.903	0.937	0.974	1.015	1.062	1.123	1.265
1.23	0.63		0.483	0.639	0.748	0.777	0.807	0.837	0.873	0.904	0.941	1.982	1.030	1.090	1.233
1.20	0.64		0.451	0.607	0.716	0.745	0.775	0.805	0.838	0.872	0.909	0.950	0.998	1.058	1.201
1.17	0.65		0.419	0.672	0.685	0.714	0.743	0.774	0.806	0.840	0.877	0.919	0.966	1.027	1.169
1.14	0.66		0.388	0.639	0.654	0.683	0.712	0.743	0.775	0.810	0.847	0.888	0.935	0.996	1.138
1.11	0.67		0.358	0.607	0.624	0.652	0.682	0.713	0.745	0.779	0.816	0.857	0.905	0.996	1.108
1.08	0.68		0.328	0.576	0.594	0.623	0.652	0.683	0.715	0.750	0.878	0.828	0.875	0.936	1.078
1.05	0.69		0.299	0.545	0.565	0.593	0.623	0.654	0.686	0.720	0.757	0.798	0.846	0.907	1.049
1.02	0.7		0.270	0.515	0.536	0.565	0.594	0.625	0.657	0.692	0.729	0.770	0.817	0.878	1.020
0.99	0.71		0.242	0.485	0.508	0.536	0.566	0.597	0.629	0.663	0.700	0.741	0.789	0.849	0.992
0.96	0.72		0.214	0.456	0.480	0.508	0.538	0.569	0.601	0.665	0.672	0.713	0.761	0.821	0.964
0.94	0.73		0.186	0.427	0.452	0.481	0.510	0.541	0.573	0.608	0.645	0.686	0.733	0.794	0.936
0.91	0.74		0.159	0.398	0.425	0.453	0.483	0.514	0.546	0.580	0.617	0.658	0.706	0.766	0.909
0.88	0.75		0.132	0.370	0.398	0.426	0.456	0.487	0.519	0.553	0.590	0.631	0.679	0.739	0.882
0.86	0.76		0.105	0.343	0.371	0.400	0.429	0.460	0.492	0.526	0.563	0.605	0.652	0.713	0.855
0.83	0.77		0.079	0.316	0.344	0.373	0.403	0.433	0.466	0.500	0.537	0.578	0.626	0.686	0.829
0.80	0.78		0.052	0.289	0.318	0.347	0.376	0.407	0.439	0.574	0.511	0.552	0.559	0.660	0.802
0.78	0.79		0.026	0.262	0.292	0.320	0.350	0.381	0.413	0.447	0.484	0.525	0.573	0.634	0.776
0.75	0.8			0.235	0.266	0.294	0.324	0.355	0.387	0.421	0.458	0.449	0.547	0.608	0.750
0.72	0.81			0.209	0.240	0.268	0.298	0.329	0.361	0.395	0.432	0.473	0.521	0.581	0.724
0.70	0.82			0.183	0.214	0.242	0.272	0.303	0.335	0.369	0.406	0.447	0.495	0.556	0.698
0.67	0.83			0.157	0.188	0.216	0.246	0.277	0.309	0.343	0.380	0.421	0.469	0.530	0.672
0.65	0.84			0.131	0.162	0.190	0.220	0.251	0.283	0.317	0.354	0.395	0.443	0.503	0.646
0.62	0.85			0.105	0.135	0.164	0.194	0.225	0.257	0.291	0.328	0.369	0.417	0.477	0.620
0.59	0.86			0.079	0.109	0.138	0.167	0.198	0.230	0.265	0.302	0.343	0.390	0.451	0.593
0.56	0.87			0.053	0.082	0.111	0.141	0.172	0.204	0.238	0.275	0.316	0.364	0.424	0.567
0.53	0.88			0.029	0.055	0.084	0.114	0.145	0.177	0.211	0.248	0.289	0.337	0.397	0.540
0.51	0.89				0.028	0.057	0.086	0.117	0.149	0.184	0.221	0.262	0.309	0.370	0.512
0.48	0.90					0.029	0.058	0.089	0.121	0.156	0.193	0.234	0.281	0.48	0.484

Find more about Power Quality Solutions

We deliver smart & cost-effective Power quality solutions to improve our customers' efficiency.

Reactive Energy Management

Low Voltage components

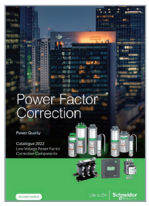

Find out more visit
www.se.com
and download
PFCED310003EN

AccuSine

Harmonic Filtering and Reactive Power Compensations

The Schneider Electric solution for active harmonic filtering in industrial and building installations

Find out more visit
www.se.com
and download
AMTED109015EN

Relevant documents

Relevant documents published by Schneider Electric

- Electrical Installation Guide.
- Expert Guide n°4: "Harmonic detection & filtering".
- Expert Guide n°6: "Power Factor Correction and Harmonic Filtering Guide"
- Technical Guide 152: "Harmonic disturbances in networks, and their treatment".
- White paper: controlling the impact of Power Factor and Harmonics on Energy Efficiency.

Relevant websites

- http://www.se.com
- https://www.se.com/ww/en/product-range/capacitor-banks/
- http://engineering.electrical-equipment.org/
- http://www.electrical-installation.org

Relevant standards

- CSA 22.2 No.190 - Capacitors for power factor correction
- UL810 - Capacitors
- UL508a - Standard for industrial panels

www.se.com

Schneider Electric Industries SAS
35, Rue Joseph Monier
CS 30323
92506 Rueil Malmaison Cedex

RCS Nanterre 954 503 439
Capital social 928 298 512 €
www.se.com

March 2023
PowerLogic™ PFC Smart LV Capacitor Banks
PFCED310004NAM

As standards, specifications and designs develop from time to time, please ask for confirmation of the information given in this document.

© 2023 - Schneider Electric. All rights reserved.
All trademarks are owned by Schneider Electric Industries SAS or its affiliated companies.

Over 75 % of Schneider Electric products have been awarded the Green Premium ecolabel.