Product data sheet

Specifications

Safety switch, VisiPacT, heavy duty, fused, viewing window, NEMA 1, 240V, 200A, 2 pole, neutral installed

VH224N

Product availability: Stock - Normally stocked in distribution facility

Main

Product	Single Throw Safety Switch
Duty Rating	Heavy duty
Device Application	Heavy application
Disconnect Type	Fusible disconnect
Factory Installed Neutral	Neutral (factory installed)
Number of Poles	2
Current Rating	200 A
Voltage Rating	250 V DC 240 V AC
Enclosure Rating	NEMA 1 steel
Motor power hp	15 hp at 240 V AC 50-60 Hz for 1 phase motors 25 hp at 240 V AC 50-60 Hz for 3 phase motors 60 hp at 240 V AC 50-60 Hz for 3 phase motors 40 hp at 250 V DC

Complementary

Short-circuit current	10 kA for H, K, J or R without fuse rejection clips 200 kA for R with fuse rejection clips 200 kA for J
Fuse type	H or K R or J
Mounting Type	Surface
Electrical Connection	Lugs
Wiring configuration	3-wire (2P + N)
Wire Size	AWG 6...250 kcmil copper or aluminium
Tightening torque	275 lbf.in (31.07 N.m) 0.02…0.2 in² (13.3…127 mm²) (AWG 6...250 kcmil)
Depth	8.6 in (218.4 mm)
Width	16.61 in (421.89 mm)
Height	28.93 in (734.82 mm)
Net Weight	53.51 lb(US) (24.27 kg)
Grounding Kit	Field installed kit available
Service Entrance	Suitable service entrance for USA Suitable service entrance for Mexico

Price is “List Price” and may be subject to a trade discount – check with your local distributor or retailer for actual price.

Disclaimer: This documentation is not intended as a substitute for and is not to be used for determining suitability or reliability of these products for specific user applications

Environment

Certifications	UL listed file E2875
Standards	UL98 CSA C22.2 No 4 NOM-003-SCFI-2000

Ordering and shipping details

Category	US10DE100008
Discount Schedule	0DE1
GTIN	3606485893266
Returnability	Yes
Country of origin	US

Packing Units

Unit Type of Package 1	PCE
Nbr. of units in pkg.	1
Package 1 Height	19.38 in (49.2125 cm)
Package 1 Width	8.31 in (21.1137 cm)
Package 1 Length	30.00 in (76.2 cm)
Package weight(Lbs)	54.5 lb(US) (24.7 kg)

Environmental Data

Schneider Electric aims to achieve Net Zero status by 2050 through supply chain partnerships, lower impact materials, and circularity via our ongoing “Use Better, Use Longer, Use Again” campaign to extend product lifetimes and recyclability.

Environmental Data explained >

How we assess product sustainability >

Environmental footprint

Carbon footprint (kg CO2 eq, Total Life cycle)	252
Environmental Disclosure	Product Environmental Profile

Use Better

Materials and Substances

Packaging made with recycled cardboard	Yes
Packaging without single use plastic	Yes
EU RoHS Directive	Compliant
REACh Regulation	REACh Declaration
California proposition 65	WARNING: This product can expose you to chemicals including: Lead and lead compounds, which is known to the State of California to cause cancer and birth defects or other reproductive harm. For more information go to www.P65Warnings.ca.gov

Use Again

Repack and remanufacture

Circularity Profile	No need of specific recycling operations
Take-back	No

Technical Illustration

Dimensions

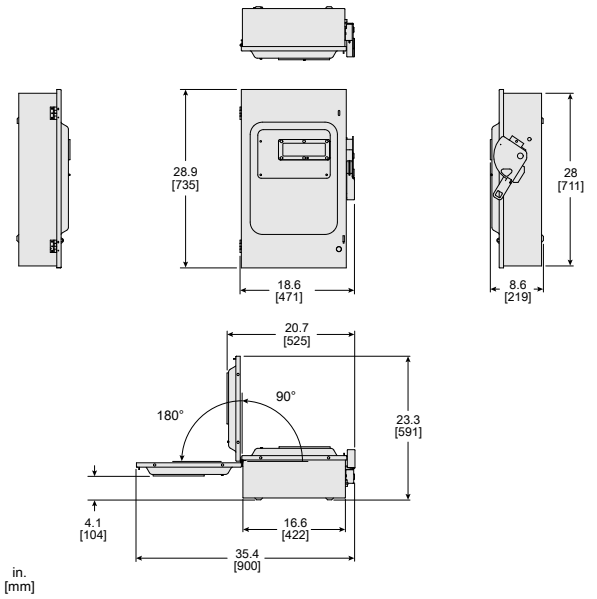

ALL DIMENSIONS ARE APPROXIMATE.
REFER TO TECHNICAL DRAWINGS AND DOCUMENTATION FOR COMPLETE INFORMATION.

Technical Illustration

Wiring diagram

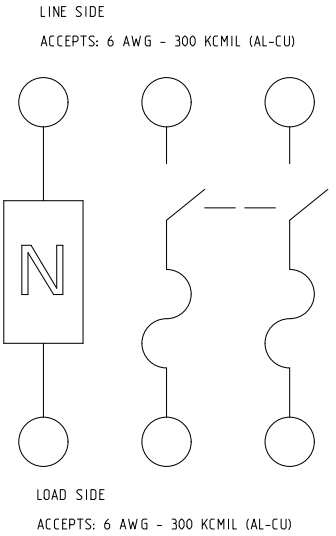

CATALOG NO. VH224N
REFER TO TECHNICAL DRAWINGS AND DOCUMENTATION FOR COMPLETE INFORMATION.